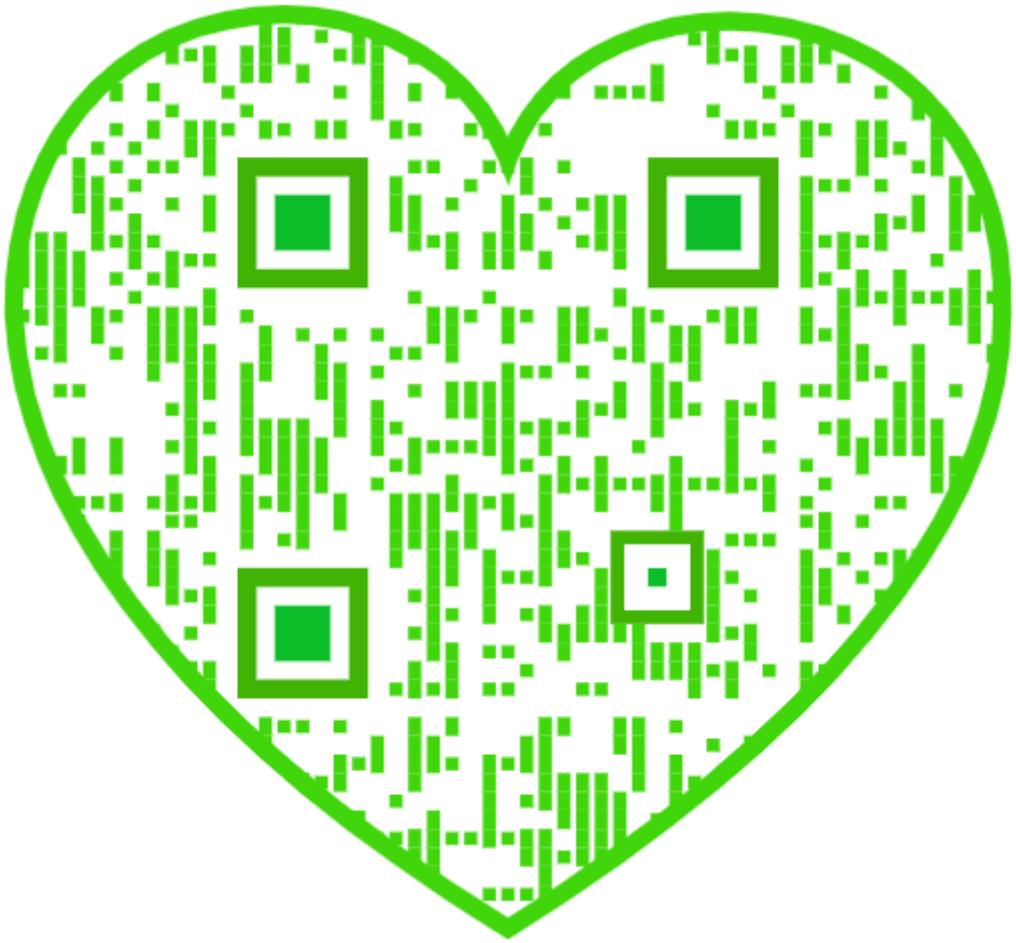

HE NEW YORK
UBLIC LIBRARY
ASTOR, LENOX AND
TILDEN FOUNDATIONS.

PRICE 25 CENTS

663892

BEARINGS

DESIGN—FRICTION—LUBRICATION—BEARING METALS

THIRD EDITION—REVISED AND ENLARGED

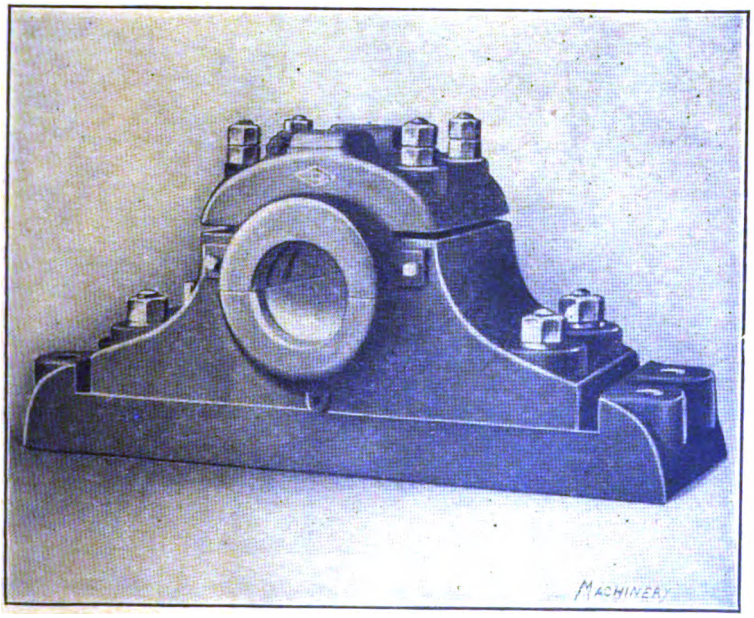

MACHINERY'S REFERENCE BOOK NO. 11
PUBLISHED BY MACHINERY, NEW YORK

MACHINERY'S REFERENCE SERIES

EACH NUMBER IS ONE UNIT IN A COMPLETE LIBRARY OF MACHINE DESIGN AND SHOP PRACTICE REVISED AND REPUBLISHED FROM MACHINERY

NUMBER 11

BEARINGS

DESIGN—FRICTION—LUBRICATION—BEARING METALS

THIRD EDITION—REVISED AND ENLARGED

NEW YORK PUBLIC LIBRARY

CONTENTS

The Design of Bearings, by FORREST E. CARDULLO - 3
Causes of Hot Bearings, by E. KISTINGER - - - 15
Thrust Bearings - - - - - - - - - 21
Friction and Lubrication - - - - - - - 25
Bearing Metals, by JOSEPH H. HART - - - - 35
Alloys for Bearings - - - - - - - - 40
Friction of Roller Bearings, by C. H. BENJAMIN - - 45

Copyright, 1912, The Industrial Press, Publishers of MACHINERY,
49-55 Lafayette Street, New York City

THE NEW YORK
PUBLIC LIBRARY
ASTOR, LENOX AND
TILDEN FOUNDATIONS
R 1914

THE NEW YORK
PUBLIC LIBRARY
053892
ASTOR, LENOX AND
TILDEN FOUNDATIONS
R 1914 L

In the second edition of this Reference Series Book, a chapter on the principles of thrust bearings was introduced, together with a very important chapter on friction and lubrication of bearings. An additional chapter on bearing metals was also included in that edition. In order to provide space for this material, the chapter on ball bearings which was contained in the first edition, was eliminated. This chapter, together with a considerable amount of additional matter on the same subject, is included in MACHINERY's Reference Book, No. 56, "Ball Bearings."

CHAPTER I

THE DESIGN OF BEARINGS*

The design of journals, pins, and bearings of all kinds is one of the most important problems connected with machine construction. It is a subject upon which we have a large amount of data, but, unfortunately, they are very conflicting. The results obtained from the rules given by different mechanical writers will be found to differ by 60 per cent or more. Many of our best modern engines have been designed in defiance of the generally accepted rules on this subject, and many other engines, when provided with what were thought to be very liberal bearing surfaces have proved unsatisfactory. This confusion has largely been the result of a misconception of the actual running conditions of a bearing.

Friction of Journals

A journal should be designed of such a size and form that it will run cool, and with practically no wear. The question both of heating and wear is one of friction, and in order for us to understand the principles upon which the design of bearings should be based, we must first understand the underlying principles of friction. Friction is defined as that force† acting between two bodies at their surface of contact, when they are pressed together, which tends to prevent their sliding one upon the other. The energy used in overcoming this force of friction, appears at the rubbing surfaces as heat, and is ordinarily dissipated by conduction through the two bodies. The force of friction, and hence the amount of heat generated under any given circumstances, can be greatly reduced by the introduction of an oily or greasy substance between the rubbing surfaces. The oil or grease seems to act in the same way that a great number of minute balls would, reducing the friction and wear, and thus preventing the overheating and consequent destruction of the parts. On this account, bearings of all kinds are always lubricated. Thus the question of journal friction involves the further question of lubrication.

For the purpose of understanding as far as possible what goes on in a bearing, and the amount and nature of the forces acting under different conditions, several machines have been designed to investigate the matter. In general they are so arranged that a journal may be rotated at any desired speed, with a known load upon the boxes. Suitable means are provided for measuring the force of friction, and also the temperature of the bearing. Provided with such an apparatus, we find that the laws of friction of lubricated journals differ very materially from those commonly stated in the text-books as the laws of friction. A comparison of the two will prove interesting.

* MACHINERY, December, 1906; January and February, 1907.

† Friction. * * * Resistance to motion due to the contact of surfaces.—*Standard Dictionary.*—Force. * * * Any cause that produces, stops, changes, or tends to produce, stop, or change the motion of a body.—*Standard Dictionary.*

Frictional Resistance in Lubricated and Unlubricated Bearings

It is generally stated in the text-books that the force of friction is proportional to the force with which the rubbing surfaces are pressed together, doubling, or trebling, as the case may be, with the normal pressure. This law is perfectly true for all cases of unlubricated bearings, or for bearings lubricated with solid substances, such as graphite, soapstone, tallow, etc. When, however, the bearing is properly lubricated with any fluid, it is found that doubling the pressure does not by any means double the friction, and when the lubricant is supplied in large quantities by means of an oil bath or a force pump, the friction will scarcely increase at all, even when the pressure is greatly increased. From the experiments of Prof. Thurston, and also of Mr. Tower, it appears that the friction of a journal per square inch of bearing surface, for any given speed, is equal to

$$f = kp^n \qquad (1)$$

where f is the force of friction acting on every square inch of bearing surface, p is the normal pressure in pounds per square inch on that surface, and k is a constant. The exponent n depends on the manner of oiling, and varies from 1 in the case of dry surfaces, to 0.50 in the case of drop-feed lubrication, 0.40 or thereabouts in the case of ring- and chain-oilers and pad lubrication, and becomes zero in case the oil is forced into the bearing under sufficient pressure to float the shaft.

The second law of friction, as generally stated, is that the force of friction is independent of the velocity of rubbing. This law also is true for unlubricated surfaces, and for surfaces lubricated by solids. In the case of bearings lubricated by oil we find that the friction increases with the speed of rubbing, but not at the same rate. If we express the law as an equation, we have

$$f = kv^m \qquad (2)$$

where f is the force of friction at the rubbing surfaces in pounds per square inch, k is a constant, v is the velocity of rubbing in feet per second, and the exponent m varies from zero in the case of dry surfaces to 0.20 in the case of drop-feed, and 0.50 in the case of an oil bath.

The third law of friction, as it generally appears in the text-books, is that the friction depends, among other things, on the composition of the surfaces rubbed together. This, again, while true for unlubricated surfaces, is not true for other conditions. It matters nothing whether the surfaces be steel, brass, babbitt, or cast iron, so long as they are perfectly smooth and true, they will have the same friction when thoroughly lubricated. The friction will depend upon the oil used, not on the materials of journal or boxes, when the other conditions of speed and pressure remain constant. Many people think that babbitt has less friction than iron or brass, under the same circumstances, but this is not true. The reason for the great success of babbitt as an "anti-friction" metal depends upon an entirely different property, as will appear later.

Combining into one equation the different laws of the friction of lubricated surfaces, as we actually find them to be, we have

$$f = kp^n v^m \qquad (3)$$

where f is the force of friction at the rubbing surface in pounds per square inch, k is a constant which varies with the excellence of the lubricant from 0.02 to 0.04, and the other quantities are as before. From this expression, we see that the friction increases with the load on the bearing, and also with the velocity of rubbing, although much more slowly than either.

Generation of Heat in Bearings

The quantity of heat generated per square inch of bearing area, per second, is equal to the force of friction, times the velocity of rubbing. All of this heat must be conducted away through the boxes as fast as it is generated, in order that the bearing shall not attain a temperature high enough to destroy the lubricating qualities of the oil. The hotter the boxes become, the more heat they will radiate in a given time. When the bearing is running under ordinary working conditions, it will warm up until the heat radiated equals the heat generated, and the temperature so attained will remain constant as long as the conditions of lubrication, load, and speed do not change. This rise in temperature above that of the surrounding air varies from less than 10 to nearly 100 degrees Fahrenheit, and is commonly about 30 degrees. We must keep either the force of friction or the velocity of rubbing, or both, down to that point where the temperature shall not attain dangerous values. As has been shown in the preceding paragraph, it was formerly believed that the force of friction was equal to a constant times the bearing pressure, and therefore, that the work of friction was equal to this constant times the pressure, times the velocity of rubbing. Now, since it is the work of friction that we are obliged to limit to a certain definite value per square inch of bearing area, it was concluded that a bearing would not reach a dangerous temperature if the product of the bearing pressure per square inch and the velocity of rubbing did not exceed a certain value. Accordingly, we find Prof. Thurston's formula for bearings to be

$$p\,v = C. \qquad (4)$$

where p is the bearing pressure in pounds per square inch, v is the velocity of rubbing in feet per second, and C has values varying from 800 foot-pounds per second in the case of iron shafts to 2,600 in the case of steel crank-pins. This has long been the standard formula for designing bearings, and while it is not satisfactory in extreme cases, it is very satisfactory for bearings running at ordinary speeds.

Turning our attention again to the results obtained from the machines for testing bearings, we find that while the results are very even and regular for ordinary pressures and temperatures, when we begin to increase either of these to a high point, the friction and wear of our bearing suddenly increases enormously. The reason is that the oil has been squeezed out of the bearing by the great pressure. This squeezing out of the oil, and consequent great increase in the friction, has three effects. The absence of the lubricant causes the parts to scratch or score each other, thus rapidly destroying themselves, the great increase in friction results in a sudden very high temperature,

in itself destructive to the materials of the bearing, and the heating is generally so rapid as to cause the pin and the interior parts of the box to expand more rapidly than the exterior parts, thus causing the box to grip the pin with enormous pressure. When the oil has been squeezed out in this manner, the bearing is said to seize.

Materials for Bearings

It is evidently of advantage to make the bearing of such material that the injury resulting from seizing shall be a minimum. If the shaft and box are of nearly equal hardness, each will tend to scratch the other when seizing occurs, and the scoring is rapid and destructive. This action will be especially noticed in case the shaft has hard spots in it, while the rest is comparatively soft, as is the case in the poorer grades of wrought iron. If, however, the shaft is made of a hard and homogeneous material, like the better grades of medium steel, and the bearing is made of some soft material, like babbitt, the bearing will not roughen the journal, and so the journal cannot cut the bearing. This is the first reason why babbitt bearings are so successful.

A second reason for the success of babbitt bearings lies in the fact that they cannot be heated sufficiently to make the bearing grip the journal. They will rather soften and flow under the pressure without actually melting away, just as iron and steel soften at a welding heat. The harder bearing metals, such as brass and bronze, do not have these advantages, and have been almost entirely replaced by babbitt in bearings for heavy duty, especially when thorough lubrication is difficult.

Babbitt is a successful bearing metal for still a third reason. The unit pressure on any bearing is not the same at all points. The shaft is invariably made somewhat smaller in diameter than the box. If there is a high spot on the surface of the box, that spot will have a very large proportion of the total pressure acting on it, and as a result the film of lubricant will be broken down at that point, and local heating and consequent damage result. In the case of babbitt bearings, before the damage can become serious the metal is caused to flow away from that point under the combined influence of the heat and pressure, the oil film is again established, and normal conditions restored.

Influence of Quality of Oil

The unit pressure which any bearing will stand without seizing depends upon its temperature and the kind of oils used. The lower the temperature of the bearings, the greater the allowable unit pressure. The reason for this is that oils become thinner and more free-flowing at the higher temperatures, consequently they are more easily squeezed out of the bearing, and it is more likely to seize. On this account, the higher the velocity of rubbing, the less the unit pressure that can be carried, but it does not follow that the allowable unit pressure varies inversely as the speed of rubbing, as was formerly thought.

The thicker and less free-flowing an oil is, the greater the unit pressure it will stand in a bearing without squeezing out. A watch

oil, or a very light spindle oil, will only run under a very small unit pressure; sometimes they are squeezed out of the bearing when the pressure does not exceed 50 pounds per square inch. On the other hand, a cylinder oil of good body will stand a pressure of over 2000 pounds to the square inch in the same bearing. There is a certain quality of oil which is best adapted to every bearing, and if possible it should be the one used.

A third cause influencing the pressure which may be carried is adhesiveness between the oil and the rubbing surfaces. Some oils are more certain to wet metal surfaces than are others, and in the same way some metals are more readily wet by oil than are others. It is evident that when the surfaces repel, rather than attract, the oil, the film will be readily broken down, and when the opposite is the case the film is easily preserved.

Oil Grooving

The mechanical arrangement of the box and journal may tend either to preserve or destroy the lubricating film. Both should be perfectly round and smooth, the box a trifle larger in diameter than the journal. The allowance commonly made for the "running fit" of the box and shaft is about $0.0005\ (D + 1)$ inches, where D is the nominal diameter of the shaft in inches. Some manufacturers of fast-running machinery make the diameter of the box exceed that of the shaft by nearly twice this amount. The oil should be introduced at that point where the forces acting tend to separate the shaft and box. At this point grooves must be cut in the surface of the box, so as to distribute the lubricant evenly over the entire length of the journal. Having been so introduced and distributed, the oil will adhere to the journal, and be carried around by it as it revolves to the point where it is pressed against the box with the greatest force, thus forming the lubricating film which separates the rubbing surfaces. The supply of lubricant thus continually furnished, and swept up to the spot where it is needed, must not be diverted from its course in any way. A sharp edge at the division point of the box will wipe it off the journal as fast as it is distributed, or a wrongly placed oil groove will drain it out before it has entirely accomplished its purpose.

An important matter in the design of bearings is the cutting of these oil grooves. They are a necessary evil, and should be treated as such, by using as few of them as possible. They serve, first, to distribute the lubricant uniformly over the surface of the journal, and, second, to collect the oil, which would otherwise run out at the ends of the bearing, and return it to some point where it may again be of use. As generally cut, oil grooves have two faults; first, they are so numerous as to cut down to a serious extent the area of the bearing, and, second, they are so located as to allow the oil to drain out of the bearing. Let us take an ordinary two-part cap bearing such as the outboard bearing of a Corliss engine, and see how it is best to cut the grooves.

One of these bearings, as commonly made by good builders, is shown in Fig. 1. The oil is supplied, drop by drop, through a hole in the

cap. If there were no oil grooves, only a narrow band of the shaft revolving immediately under this hole would be reached by the oil. If now, we cut a shallow groove in the cap, lengthwise of the bearing, and reaching almost, but not quite, to the edges, the oil will be enabled to reach every part of the revolving surface. To this groove we sometimes add two, as shown by the dotted lines in Fig. 2, which show the inner surface of the cap as being unrolled, and lying flat on the paper. No series of grooves can be cut in the box which will distribute the oil as well or as thoroughly as those shown, and they should always be used in the caps of such bearings in preference to any others.

Having distributed the oil over the revolving surface, our next care must be to see that it is not wiped off before it reaches the point for which it was intended. Accordingly, we should counterbore the box at the joint in such a way as to make a recess in which the surplus oil may gather, and which will further assist when necessary in distributing the lubricant. This counterbore should extend to within ¼ or ½ inch of the ends of the bearing, as shown in Fig. 1.

When the oil is supplied through the cap, grooves for the distribution

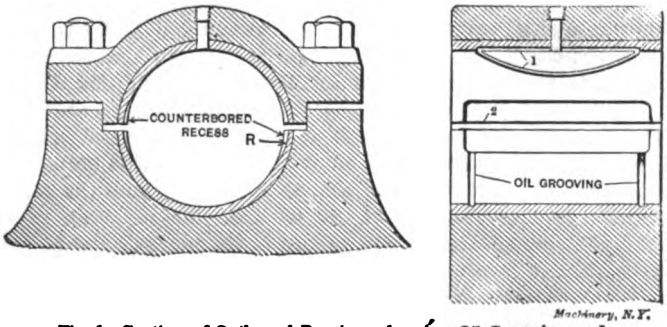

Machinery, N.Y.

Fig. 1. Section of Outboard Bearing, showing Oil Grooving and Counterbored Recess

of the oil should not be cut in the bottom half of the bearing, since they will only serve to drain the bearing of the film of oil formed there. The old film is under great pressure at this point, and naturally tends to flow away when any opportunity is offered. If left to its own devices, part of it will squeeze out at the ends of the bearing and be lost. In order to save this oil, shallow grooves, parallel to the ends of the bearing, may be cut in the lower box, as shown in Figs. 1 and 3. Their office is to intercept the oil which would flow out at the ends, and divert it to the counterbored recesses, where it can again be made of use. These are the only grooves that should ever be used in the lower half of a two-part bearing, and they should only be used in the larger sizes.

Two classes of bearings which may well be made without oil grooves are, first, the cross-head slippers of engines, and, second, crank-pin boxes. The cross-head slipper should have a recess cut at each end, in the same way as the counterboring of the two-part box, as shown in Fig. 4. To this is sometimes added the semi-circular groove shown in

dotted lines, which does no harm, although it is unnecessary. The best way to oil a crank-pin is through the pin itself. In the case of overhung pins, a hole is drilled lengthwise of the pin to its center. A second hole is drilled from the surface of the pin to meet the first one. A shallow groove should now be cut in the surface of the pin, parallel to its axis, and reaching almost to the ends of the bearing, as shown

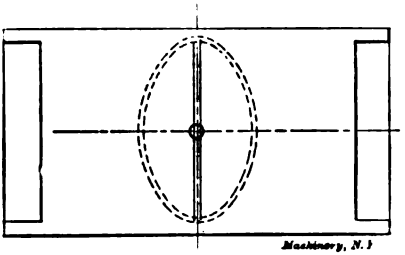

Fig. 2. Development of Cap, showing Oil Grooving and Counterboring

in Fig. 5. No grooves should be cut in the boxes, but the edges where they come together should be counterbored.

As much care and attention should be given to the oil grooving as to the size of a bearing, yet it is a matter often left to the fancy of the mechanic who fits it. The purpose of the grooves, to distribute the oil evenly, should ever be kept in mind, and no groove should be cut which does not accomplish this purpose, except it be to return waste

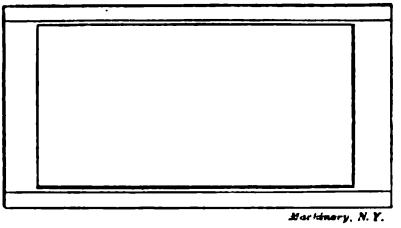

Fig. 3. Development of Lower Half of Outboard Bearing

oil to a place where it may again be of use. Most commonly, bearings have too many grooves. So far from helping the lubricants, they generally drain the oil from where it is most needed. Use them *sparingly*.

Calculating the Dimensions

The durability of the lubricating film is affected in great measure by the character of the load that the bearing carries. When the load is unvarying in amount and direction, as in the case of a shaft carrying a heavy fly-wheel, the film is easily ruptured. In those cases where the pressure is variable in amount and direction, as in railway journals and crank-pins, the film is much more durable. When the journal only rotates through a small arc, as with the wrist-pin of a

steam engine, the circumstances are most favorable. It has been found that when all other circumstances are exactly similar, a car journal, where the force varies continually in amount and direction, will stand about twice the unit pressure that a fly-wheel journal will, where the load is steady in amount and direction. A crank-pin, since the load completely reverses every revolution, will stand three times, and a wrist-pin, where the load only reverses, but does not make a complete revolution, will stand four times the unit pressure that the fly-wheel journal will.

The amount of pressure that commercial oils will endure at low speeds without breaking down varies from 500 to 1000 pounds per square inch, where the load is steady. It is not safe, however, to load a bearing to this extent, since it is only under favorable circumstances that the film will stand this pressure without rupturing. On this account, journal bearings should not be required to stand more than two-thirds of this pressure at slow speeds, and the pressure

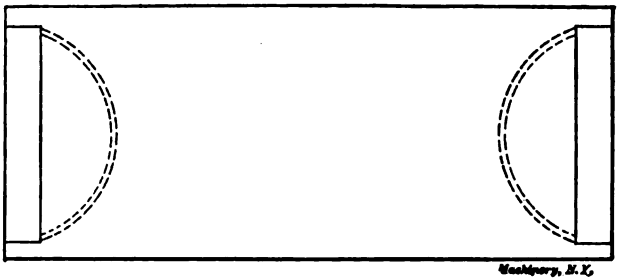

Fig. 4. Face of Cross-head Slipper

should be reduced when the speed increases. The approximate unit pressure which a bearing will endure without seizing is as follows:

$$p = \frac{PK}{DN + K} \qquad (5)$$

where p is the allowable pressure in pounds per square inch of projected area, D is the diameter of the bearing in inches, N is the number of revolutions of the journal per minute, and P and K depend upon the kind of oil, manner of lubrication, etc.

The quantity P is the maximum safe unit pressure for the given circumstances, at a very slow speed. In ordinary cases the value of this number will be 200 for collar thrust bearings, 400 for shaft bearings, 800 for car journals, 1200 for cank-pins, and 1600 for wrist-pins. In exceptional circumstances, these values may be increased by as much as 50 per cent, but only when the workmanship is of the best, the care the most skillful, the bearing readily accessible, and the oil of the best quality and unusually viscous. It is only in the case of very large machinery, which will have the most expert supervision, that such values can be safely adopted. In the case of the great units built for the Subway power plant in New York by the Allis-Chalmers

Co. the value of P in the formula given on page 10 for the crank-pins was 2,000—as high a value as it is ever safe to use.

The factor K depends upon the method of oiling, the rapidity of cooling, and the care which the journal is likely to get. It will be found to have about the following values: Ordinary work, drop-feed lubrication, 700; first-class care, drop-feed lubrication, 1,000; force-feed lubrication or ring-oiling, 1,200 to 1,500; extreme limit for perfect lubrication and air-cooled bearings, 2,000. The value 2,000 is seldom used, except in locomotive work where the rapid circulation of the air cools the journals. Higher values than this may only be used in the case of water-cooled bearings.

Formula No. 5 is in a convenient form for calculating journals. In case the bearing is some form of a sliding shoe, the quantity 240 V should be substituted for the quantity $D\ N$ in the equation, V being the velocity of rubbing in feet per second. There are few cases where a unit pressure sufficient to break down the oil film is allow-

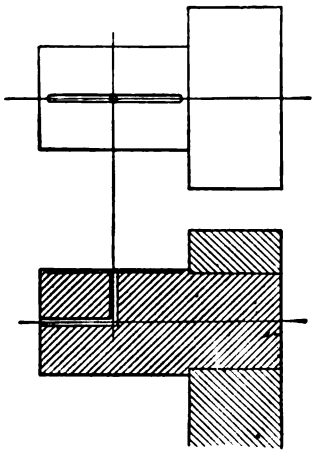

Fig. 5. Internally-oiled Crank-pin, showing Oil Passages and Grooves

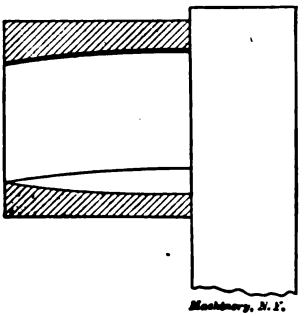

Fig. 6. Section showing the Bending of a Crank-pin and Consequent Unequal Wear of the Box

able. Such cases are the pins of punching and shearing machines, pivots of swing bridges, and so on. The motion is so slow that heating cannot well result, and the effects of scoring cannot be serious. Sometimes bearing pressures up to the safe working stress of the material are used, but better practice is to use pressures not in excess of 4,000 pounds per square inch.

In general, the diameter of a shaft or pin is fixed from considerations of strength or stiffness. Having obtained the proper diameter, we must next make the bearing long enough so that the unit pressure shall not exceed the required value. This length may be found directly by means of the equation:

$$L = \frac{W}{P\,K}\left(N + \frac{K}{D}\right) \qquad (6)$$

where L is the length of the bearing in inches, W the load upon it in pounds, and P, K, N, and D are as before.

A bearing may give poor satisfaction because it is too long, as well as because it is too short. Almost every bearing is in the condition of a loaded beam, and therefore it has some deflection. Let us take the case of an overhung crank-pin, in order to examine the phenomena occurring in a bearing under these circumstances. When the engine is first run, both the pin and box are, or should be, truly round and cylindrical. As the pin deflects under the action of the load, the pressure becomes greater on the side toward the crank throw, breaking down the oil film at that point, and causing heat. After a while the box becomes worn to a slightly larger diameter at the side toward the crank, in the manner shown in Fig. 6, which is a section showing an exaggerated view of the condition of affairs in the crank-pin box when under load.

It has already been noted that the box must be a trifle larger in diameter than the journal, and for successful working this difference is very strictly defined, and can vary only within narrow limits. Should the pin be too large, the oil film will be too thin, and easily ruptured. On the other hand, should the pin be too small the bearing surface becomes concentrated at a line, and the greater unit pressure at that point ruptures the film. This is exactly what happens when the pin is too long. The box rapidly wears large at the inner end, and the pressure becomes concentrated along a line as a consequence. The lubricating film then breaks down, and the pin heats and scores. The remedy is not to make the pin longer, so as to reduce the unit pressure, but to decrease its length and to increase its diameter, causing the pressure to be evenly distributed over the entire bearing surface.

The same principles apply to the design of shafts and center crank-pins. They must not be made so long that they will allow the load to concentrate at any point. A very good rule for the length of a journal is to make the ratio of the length to the diameter about equal to one-eighth of the square root of the number of revolutions per minute. This quantity may be diminished by from 10 to 20 per cent in the case of crank-pins, and increased in the same proportion in the case of shaft bearings, but it is not wise to depart too far from it. In the case of an engine making 100 revolutions per minute, the bearings would be by this rule from one and a quarter to one and a half diameters in length. In the case of a motor running at 1,000 revolutions per minute, the bearings would be about four diameters long. While the above is not a hard and fast rule which must be adhered to on all occasions, it will be found to be an excellent guide in all cases of doubt.

The diameter of a shaft or pin must be such that it will be strong and stiff enough to do its work properly. In order to design it for strength and stiffness it is first necessary to know its length. This may be assumed from the following equation:

$$L = \frac{20\,W\sqrt{N}}{PK}, \qquad (7)$$

where all the quantities are the same as in the preceding equations. Having found the approximate length by the use of the above equation, the diameter of the shaft or pin may be found by any of the standard equations given in the different works on machine design. It is next in order to recompute the length from formula No. 6, taking this new value if it does not differ materially from the one first assumed. If it does, and especially if it is greater than the assumed length, take the mean value of the assumed and computed lengths and try again.

Examples of Calculating Dimensions for Bearings

A few examples will serve to make plain the methods of designing bearings by means of these principles. Let us take as the first case the collar thrust bearings on a 10-inch propeller shaft, running at 150 revolutions per minute, and with a thrust of 60,000 pounds. Assuming that the thrust rings will be 2 inches wide, their mean diameter will be 12 inches. From equation No. 5 we will have for the allowable bearing pressure $\frac{200 \times 700}{12 \times 150 + 700}$, or 56 pounds per square inch. This will require a bearing of 60,000 ÷ 56, or 1070 square inches area. Since each ring has an area of 0.7854 $(14^2 - 10^2)$, or about 75 square inches, the number of rings needed will be 1070 ÷ 75, or 14. In case it was desirable to keep down the size of this bearing, the constant K might have had values as high as 1000 instead of 700.

Next, we will take the main bearing of a horizontal engine. We will assume that the diameter of the shaft is 15 inches, that the weight of the shaft, fly-wheel, crank-pin, one half the connecting-rod, and any other moving parts that may be supported by the bearings, is 120,000 pounds, and that two-thirds of this weight comes on the main bearing, the remainder coming on the outboard bearing. The engine runs at 100 revolutions per minute. In this case, $W = 80{,}000$ pounds, $P = 400$ pounds per square inch, and K depends upon the care and method of lubrication. Assuming that the bearing will be flushed with oil by some gravity system, and that, since the engine is large, the care will be excellent, we will let $K = 1500$. This gives us for the length of the bearing from formula No. 6:

$$L = \frac{80{,}000}{400 \times 1500}\left(100 + \frac{1500}{15}\right) = 26\tfrac{1}{2} \text{ inches (about)}.$$

It is to be noted that, in computing the length of this bearing, the pressure of the steam on the piston does not enter in, since it is not a steady pressure, like the weight of the moving parts. The only matter to be noted in connection with the steam load is that the projected area of the main bearing of an engine shall be in excess of the projected area of the crank-pin.

For another example we will take the case of the bearings of a

100,000-pound hopper car, weighing 40,000 pounds, and with eight 33-inch wheels. The journals are 5½ inches diameter, and the car is to run at 30 miles per hour. The wheels will make 307 revolutions per minute when running at this speed, and the load on each journal will be 140,000 ÷ 8, or 17,500 pounds. Although the journal will be well lubricated by means of an oil pad, it will receive but indifferent care, so the value of K will be taken as 1,200. The length of the journal will then be

$$L = \frac{17{,}500}{800 \times 1{,}200}\left(307 + \frac{1{,}200}{5.5}\right) = 9\tfrac{5}{8} \text{ inches (about).}$$

As a last example, we will take the case of the crank-pin of an engine with a 20-inch steam cylinder, running at 80 revolutions per minute, and having a maximum unbalanced steam pressure of 100 pounds per square inch. The maximum, and not the mean steam pressure should be taken in the case of crank- and wrist-pins. The total steam load on the piston is 31,400 pounds. P will be taken as 1,200, and K as 1,000. We will therefore obtain for our trial length:

$$L = \frac{20 \times 31{,}400 \times \sqrt{80}}{1{,}200 \times 1{,}000} = 4.7, \text{ or, say, } 4\tfrac{3}{4} \text{ inches.}$$

In order that the deflection of the pin shall not be sufficient to destroy the lubricating film we have

$$D = 0.09\sqrt[4]{WL^3}$$

which limits the deflection to 0.003 inch. Substituting in this equation, we have for the diameter 3.85, or say 3⅞ inches. With this diameter we will obtain the length of the bearing, by using formula No. 6, and find

$$L = \frac{31{,}400}{1{,}200 \times 1{,}000}\left(80 + \frac{1{,}000}{3\tfrac{7}{8}}\right) = 8.85, \text{ say 9 inches.}$$

The mean of this value, and the one obtained before is about 7 inches. Substituting this in the equation for the diameter, we get 5¼ inches. Substituting this new diameter in equation No. 6 we have

$$L = \frac{31{,}400}{1{,}200 \times 1{,}000}\left(80 + \frac{1{,}000}{5\tfrac{1}{4}}\right) = 7.1, \text{ say 7 inches.}$$

Probably most good designers would prefer to take about half an inch off the length of this pin, and add it to the diameter, making it 5¾ × 6½ inches, and this will be found to bring the ratio of the length to the diameter nearer to one-eighth of the square root of the number of revolutions.

CHAPTER II

CAUSES OF HOT BEARINGS*

In our modern high-speed steam and gas engines, turbines and the like, hot bearings are of more frequent occurrence than is generally supposed. Very often a new plant, just put into service, has to be shut down on this account. It not infrequently happens that the engine which has run "hot" is one of several, identical in design and construction, the bearings in the others having operated without trouble. Apparently there is no cause for this particular engine to give trouble, but in order to remove the difficulty, various makes of babbitt metals and bronzes are tried, sometimes with good results, sometimes without. Again, it occurs that a machine or engine operates at the beginning with perfect satisfaction, but after a time one or more of the bearings

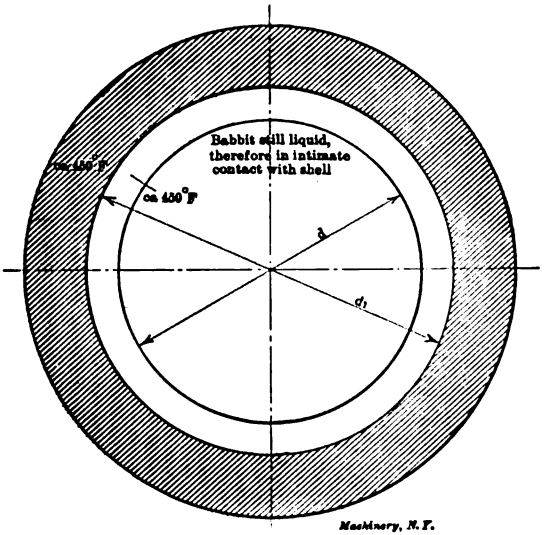

Fig. 7. One-piece Bearing· Babbitt just Poured. Both Shell and Babbitt at the Solidifying Temperature

begin to run "warm," and finally "hot," so that relining becomes necessary. As a general rule it is then simply accepted as a fact that the bearings "ran hot"; seldom does anyone think it worth while to seek out the fundamental causes for the trouble. That there is always the element of doubt in regard to bearings, is evidenced by the fact that our modern engine builders usually deliver an extra set of bearings with the engine, so that, in the event of trouble, a new set is at hand. The following may be of some assistance towards discovering and

*MACHINERY, November, 1907.

eliminating, in a scientific manner, and along technical and metallurgical lines, the real causes of hot bearings.

Investigation will show that the main reasons for hot bearings are:

1.—Shrinkage or contraction of the babbitt.

2.—Shrinkage strains set up in the babbitt metal liner by the unequal distribution of the babbitt metal over the shell.

3.—A lack of contact between the babbitt metal liner and the cast iron or cast steel shell.

4.—The lubricant becomes partially deflected into the wrong place.

Shrinkage or Contraction of the Babbitt

a. Shrinkage in a diametral direction. As an illustration of this point, one may take the simple example of an iron ball and ring. If this ball, when cold, will just pass through an iron ring, it will not

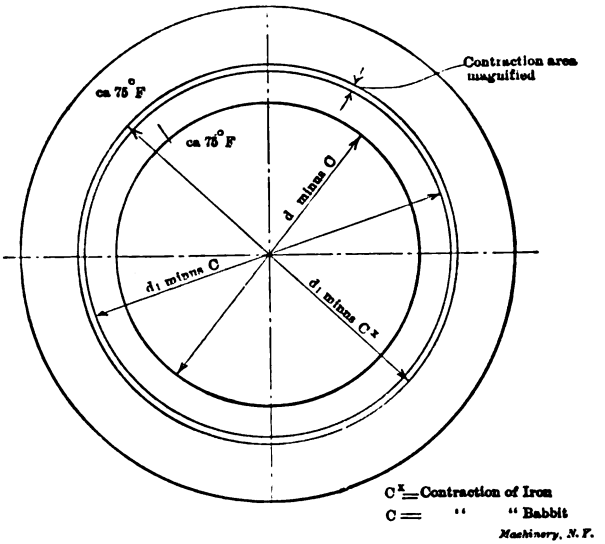

Fig. 8. Same Bearing as shown in Fig. 7 Cooled Down to Normal Temperature

do so when somewhat heated and expanded. After cooling down, however, it will again pass through the ring. A similar action takes place in a bearing.

In Fig. 7 of the accompanying illustrations the babbitt liner may be considered to have been just poured in, and the metal to be still liquid. At the exact solidifying point the babbitt will have filled all the interstices and be in good contact with the cast iron or cast steel shell, provided the babbitt itself has sufficient fluidity to enable it to penerate the smallest spaces. From this solidifying point on, the babbitt will contract according to its coefficient of contraction. Now, if the coefficient of contraction of the babbitt were the same as that of the material out of which the shell is made (usually cast iron or cast

steel), and provided that the shell had acquired the same temperature as the babbitt, the shell and the babbitt liner would then contract equally, and a fairly good contact would result, and there would be nothing to set up counter strains during shrinkage. But, as the coefficient of contraction of almost all babbitt metals is approximately two or three times higher than that of cast iron or cast steel, a shrink-

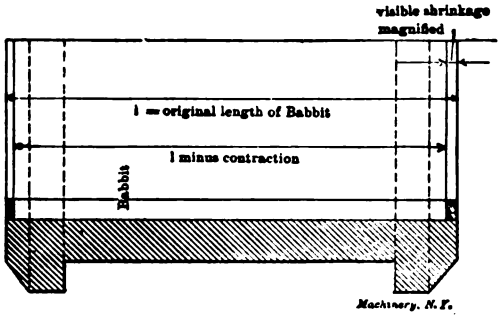

Fig. 9. Babbitt Bearing without Dove-tailed Grooves or other Retaining Device

age or loosening of the babbitt liner from the shell must absolutely take place after the solidfying point of the babbitt is reached. Fig. 8 shows this contraction as it would appear if magnified. The fact that most bearings are "split" does not, of course, change this result. If the babbitt is secured in the shell by means of dove-tailed grooves, or other anchoring devices, so that the actual visible contraction from the

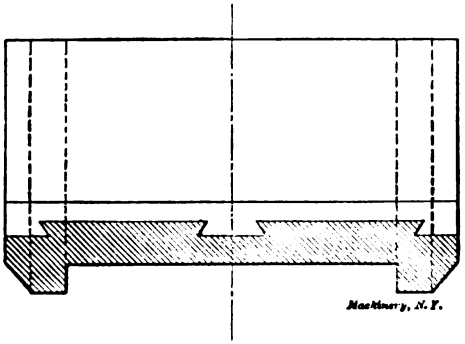

Fig. 10. Same Bearing as shown in Fig. 9, but with Dove-tailed Grooves. Visible Shrinkage Prevented, but Shrinkage Strains Produced

shell is lessened or minimized, then an unavoidable consequence of these grooves or other devices is *shrinkage strains*, set up while the babbitt cools down, as explained further on.

b. Shrinkage in an axial dircction. With regard to shrinkage in the axial direction, it may be observed that the same results take place. Fig. 9 illustrates how the babbitt metal shrinks in a cast iron or cast steel shell in the axial direction, when there is no anchoring device

employed. In Fig. 10 may be seen the old-fashioned dove-tailed groove construction, prohibiting an actual visible shrinkage, but causing shrinkage strains.

Shrinkage Strains Produced by an Unequal Distribution of Babbitt Metal Liner

By referring to Fig. 11, it will be observed that the babbitt metal at *aa* is about twice as thick as at *bb*. The consequence is that, as the solidifying time of the greater mass *aa* is longer than that of the smaller mass *bb*, shrinkage strains are set up throughout the babbitt liner, which loosen it from the shell and have the tendency, in combination with the regular working pressures and shocks, to produce minute cracks in the liner.

Lack of Contact between Liner and Shell

In a bearing shell some parts of the liner are in close contact with the shell, as a result of careful pouring and the use of a properly made babbitt metal, while other parts of the liner will not be in good contact with the shell, by reason of shrinkage and the formation of air

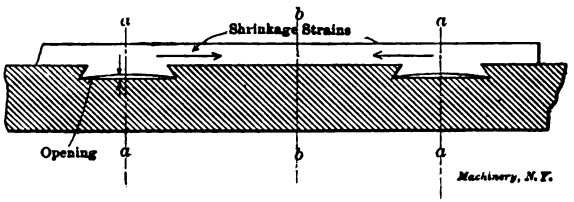

Fig. 11. Illustration of Shrinkage Strains Produced by Unequal Distribution of Babbitt Metal

bubbles and oxide gases, which latter are especially liable to be formed in babbitts containing copper. With the idea of filling up the hollow spaces between liner and shell, it is a quite general American practice, and an English one also, to peen or hammer the babbitt liner. The advisability of this treatment is, however, very questionable. By the peening process the air will simply be driven from one point to another, and be forced into places where at first a good contact existed, thus destroying it. To secure a permanent and intimate contact between liner and shell by peening is impossible, on account of the elasticity of the liner material. When the hammer strikes the metal, a contact may be formed, but as soon as the force of the blow is gone, the metal will spring away more or less by reason of its elasticity. Furthermore, the babbitt metal becomes more brittle by peening, and its strength diminished; this has been proved beyond doubt by a number of tests. Peening, unless performed with the utmost precaution, also produces minute cracks in the structure of the babbitt, which will constantly be enlarged by the regular working pressures. For these reasons, European continental practice has now practically abandoned the peening of babbitt metal liners. Summing up, in spite of

good pouring, or peening, or dove-tailed grooves and other similar anchoring devices, the liners are in a greater or less degree loose in the shells.

The Lubricant Penetrating the Hollow Spaces

When these loose bearings are in service, the hollow spaces between the liner and shell gradually become impregnated with an oil film from the lubricant employed, as shown in Fig. 12. Now, the coefficient of heat-conductivity of oil is only about 1/200 of that of an ordinary babbitt metal, or of cast iron. Therefore, the heat created in the liner by the working friction will not be conducted away to the shell, and thence to the engine frame, as quickly as though an intimate contact existed between shell and liner. The result is that the

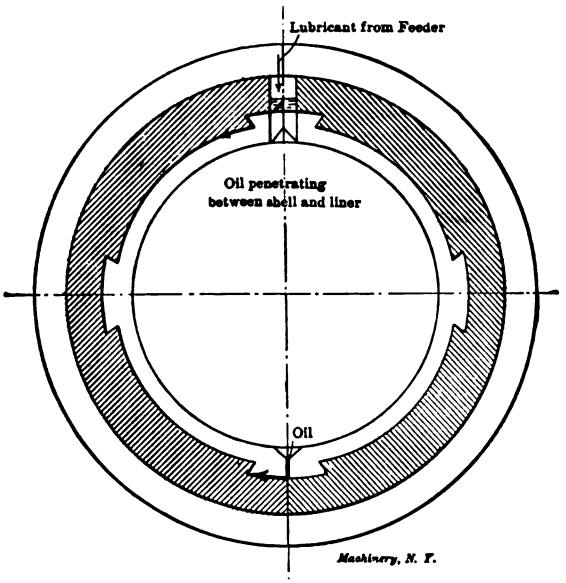

Fig. 12. Penetration of Oil between Shell and Liner

bearing readily becomes hot, because the babbitt metal liner retains, instead of throwing off, the heat. The regular working pressure also sets up a hydraulic pressure in the oil film, between the shell and the liner, which tends to produce breakages and cracks in the liner, as may sometimes be observed when removing bearings from gas engines, pumping engines and the like, subject to high pressures and shocks. A consequence of shocks is also that a liner which is somewhat loose will become distorted and "work"; this "working" produces additional friction and increased temperatures. All the facts mentioned above tend toward the one result, *viz.*, the increasing of the temperature in the bearings, even to the extent of melting down the babbitt liner.

From various tests which have been made, the results of one may be

given here. A bearing with a perfect contact between liner and shell was tested under a constant load of 400 pounds per square inch and a constant sliding speed of 480 feet per minute. The same bearing was again tested under the same conditions, but with the liner not in intimate contact with the shell. As the tests were necessarily made under a slightly varying atmospheric temperature, the difference between the actual bearing temperature and the room temperature was taken as the basis of each, and in the former case the result was 60 degrees F., while in the latter 85 degrees F. When such differences are obtained in a testing machine, under the best operating conditions, how much worse must be the influence of the slightest lack of contact under usual working conditions, such as we have them in steam engines, air compressors, pumps, gas engines, etc.!

Summing up the foregoing we may say that in most cases the direct causes of hot bearings are: A lack of contact between liner and shell, caused, first, by shrinkage and careless treatment of the babbitt, and second, by shrinkage strains produced by an unequal distribution of the liner masses over the shell; the formation of an isolating oil film, together with its consequences; cracks or breakages in the liner produced as explained. The means of avoiding these troubles, and the principles of a good and safe bearing construction, must consequently be an absolutely intimate and homogeneous contact between liner and shell; an equal distribution of the liner over the shell; and a strengthening of the liner against the shocks and working pressures. If these conditions are faithfully carried out, many troubles and much expense may be avoided.

CHAPTER III

THRUST BEARINGS

Thrust bearings are, in general, of two kinds: step bearings and collar bearings. In the former the thrust is taken by the end of the supporting shaft, in the latter by projections or shoulders at some distance from the end of the shaft. The simplest kind of a thrust bearing is the pivot bearing, exemplified by the bearings for watch pinions and by a lathe center taking the end thrust of a cut on a piece held between the centers in a lathe. In general, however, the end thrust is taken by

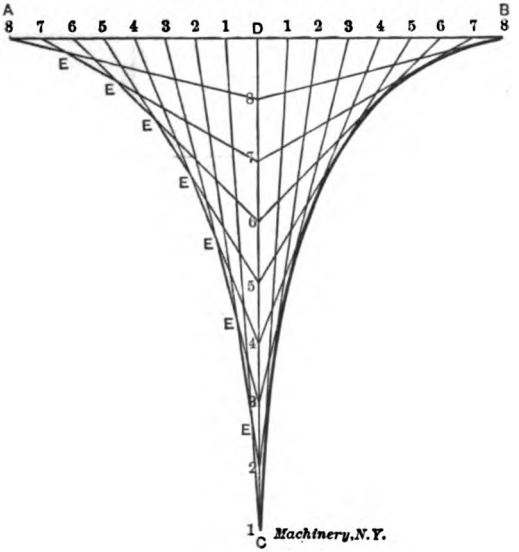

Fig. 13. Construction of the Schiele Curve

a large flat or nearly flat surface. When this is the case several considerations present themselves which must be given due attention by the machine designer.

Assume that the flat end of a vertical cylindrical shaft carrying a weight or otherwise subjected to pressure is supported by a flat surface. Then, if the shaft rotates, the velocities of points on its end surface at different radial distances from its axis, will vary. The velocities of the points near the outside will be, in comparison, very high, while the velocity of a point near the center will be low. On account of this variation in velocity, the wear on the end surface of the shaft and the thrust surface of the bearing will be considerably uneven. If the parts are well fitted together when new, so that a uni-

form pressure is produced all over the end of the shaft and bearing, then the outer parts of the bearing surfaces will wear away most rapidly. This again increases the pressure at the center, which sometimes may become so intense as to exceed the ultimate crushing strength of the material. The unequal wear of the surfaces of thrust bearings is one of the most difficult problems meeting the designer of machinery of which such bearings form a part.

Experiments carried out by Schiele show that the wear is theoretically along a curve called the *tractrix*, the construction of which will immediately be referred to. If an end thrust bearing is made of a form corresponding to the Schiele curve, then the wear in the direction of the axis of the thrust shaft will be uniform at all points; but while this curved form would be theoretically correct, it has been shown in practice that nothing is to be gained by the use of bearings having this complicated shape.

The tractrix or Schiele curve may be constructed as follows. In

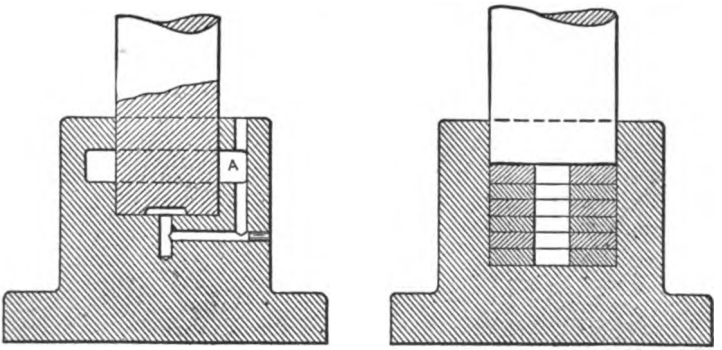

Figs. 14 and 15. Simple Designs of Step Bearings

Fig. 13 draw the lines *A B* and *C D*, the first representing the extreme diameter of the shaft or spindle and the latter its axis. Set off on *A B* a number of equal spaces, 1, 2, 3, 4, 5, etc., and on *C D* other equal spaces numbered to correspond and to suit the desired length of the bearing. Then join these spaces by the lines 1-1, 2-2, 3-3, etc. The intersections *E* will be in the path of the curve to be constructed.

Simple Step Bearings for Light Duty

For light duty simple step bearings of the types shown in Figs. 14 to 17 answer the requirements well. The intense pressure at the center and the consequent unequal wear are partly avoided in the bearing in Fig. 14, by cutting away the metal at the center of the shaft, as shown, leaving an annular ring which takes the thrust. This procedure is advisable in all step bearings. Another difficulty met with in bearings of this type is the question of lubrication. If the speed of the shaft is high, the centrifugal force tends to throw the oil out from the center. Special provisions must then be made for again returning the oil to the center, as otherwise the bearing would wear down rapidly,

become heated, etc. In Fig. 14 a simple method is shown for automatically returning the oil to the bearing surfaces. An oil-passage is made from the chamber *A*, formed around the shaft, to the center of the shaft at the bottom. When the channel and chamber are once filled with oil, this oil will continue to circulate automatically; it will be drawn in at the bottom, be thrown outward by the centrifugal force, find its way into the chamber *A*, and finally, through the channel, return to the center of the bearing.

When a bearing for heavier duty is required, the design shown in Fig. 15 is quite commonly adopted. Here a number of disks or washers are placed between the end of the thrust shaft and the supporting bearing. The object of this is to introduce a number of wearing surfaces, instead of having the end of the shaft and the box take all the wear. Due to the fact that the series of washers introduced permits of a lower speed between each pair of washers, the wear is quite materially reduced. Should the pressure cause any two washers to heat

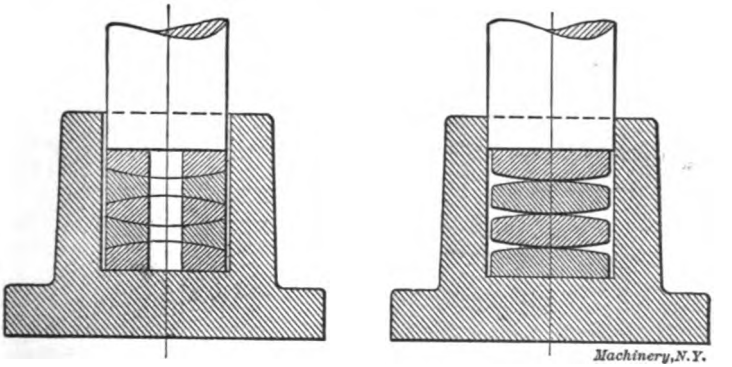

Figs 16 and 17. Improved Designs of Step Bearings

and bind, the frictional resistance between them ceases, as one washer is free to follow the motion of the other, and the oil will have an opportunity to get between the surfaces and cool them off.

A hole may be, and generally is, drilled through the centers of the washers, as shown in Fig. 15, and the same method for continual lubrication, as shown in Fig. 14, may be used to advantage. Every alternate washer is commonly made of hardened tool steel or case-hardened machine steel, while the others are made of bronze. This combination provides for good wearing qualities. If the thrust shaft is made of soft machine steel, and the box of cast iron, the top washer is often secured to the shaft, and the bottom washer to the box, so that all the wear may be concentrated upon the washers, which can easily be replaced.

In Fig. 16 is shown an improvement on the bearing in Fig. 15. This construction is recommended, in particular, in cases where the shaft and its bearing box cannot be properly aligned with one another. The washers have spherical faces, being alternately convex and concave. They are slightly smaller in diameter than the bearing box into which

they are inserted, so that they may have an opportunity to adjust themselves to a perfect bearing on each other, and thereby make up for the differences in the alignment of the thrust shaft and bearing box.

Another type of thrust bearing for loads which are not excessive is shown in Fig. 17. It is a well-established principle that it is better to take the thrust of a bearing as near the center of the shaft as the load to be carried will allow. The farther away from the center the support is, the greater is the motion and the greater is the retarding effect of the friction. The thin convex washers used are of tool steel, hardened, and although the bearing between them is very small, their strength and hardness is such that they are capable of standing a considerable pressure, though not as great a one, probably, as the other forms shown in Figs. 14, 15 and 16. In this bearing, also, there is no

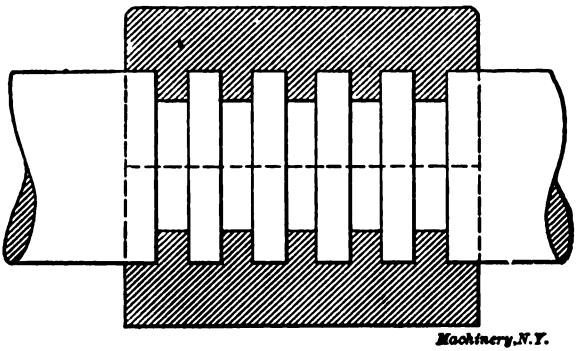

Fig. 18. Collar Thrust Bearing

difficulty in keeping the surfaces well oiled, since all that is necessary is to keep the chamber well flooded with oil.

Collar Thrust Bearings

When a considerable thrust is to be taken care of, or when the thrust is taken on the shaft at a distance from its end, collar thrust bearings are used. They are usually of the form shown in Fig. 18. In a well made bearing each of the collar surfaces takes its proportionate part of the load, and it is thus possible, without using excessive diameters, to properly distribute a very great thrust on a number of collars formed solidly with the shaft by cutting a number of grooves in the latter. One advantage of the collar bearing is that the difference between the outer and inner diameters of the bearing surface is not very great, and hence the velocities at the outer and inner edges do not vary appreciably; this, again, eliminates unequal wear on the thrust collar surfaces.

CHAPTER IV

FRICTION AND LUBRICATION*

Probably the most important and complete series of experiments on the friction of journals and pivot bearings yet undertaken was carried out by the late Mr. Beauchamp Tower for a Research Committee of the British Institution of Mechanical Engineers. In carrying out the experiments, as the result of an accidental discovery, an attempt was made to measure the pressure at different points of the bearing. A hole had been drilled through the cap and brass for an ordinary lubricator, when, on restarting the machine, oil was found to rise through the hole, flowing over the top of the cap. The hole was then stopped with a wooden plug, but this was gradually forced out on account of the great pressure to which the oil was subjected, and which on screwing a pressure gage into the hole was found to exceed 200 pounds per square inch, although the mean load on the journal was only 100 pounds per square inch. Mr. Tower proved by this and subsequent experiments that the brass was actually floating on the film of oil existing between the shafting and the bearing. By drilling a number of small holes at different points in the brass, and connecting each one of them during the test to a pressure gage, Mr. Tower was able to obtain a diagram showing the distribution of pressure upon the bearing. It appears that the pressure is greatest a little to the off side and at the middle of the length of the bearing, gradually falling to zero at each edge. The total upward pressure was found to be practically the same as the total load on the bearing, again showing that the whole of the weight was borne by the film of oil. Any arrangement which would permit the film to escape was found to result in undue heating, and the bearing would finally seize at a very moderate load. The oil bath lubrication was found to be the most perfect system of lubrication possible. In the table below the results obtained by Mr. Tower are specified for three different methods of oiling.

	Actual Load in Pounds per Square Inch	Coefficient of Friction	Relative Friction
Oil bath	263	0.00139	1.00
Syphon lubricator ...	252	0.00980	7.06
Pad under journal....	272	0.00900	6.48

With the needle lubricator and a straight groove in the middle of the brass for distributing the oil, the bearing would not run cool when loaded with only 100 pounds per square inch, and no oil would pass down from the lubricator. The groove, in fact, was found to be a most effective method of collecting and removing the film of oil. In the next place, the arrangement of grooves usual in locomotive axle boxes was adopted, the oil being introduced through two holes, one near each end and each communicating with a curved groove. This

* MACHINERY. March, 1907, and April, 1908.

bearing refused to take the oil, and could not be made to run cool, and after several trials the best results which could be obtained led to the seizure of the brass under a load of only 200 pounds per square inch. These experiments proved clearly the futility of attempting to introduce the lubricant at that part of the bearing. A pad placed in a box full of oil was therefore fixed below the journal, so as to be always in contact with it when revolving. A pressure of 550 pounds per square inch could then be carried without seizing, or very nearly the same load as in the case of oil-bath lubrication.

Results of Tower's Experiments

One important result was to show that friction is nearly constant under all loads within ordinary limits, and that it does not increase in direct proportion to the load according to the ordinary laws of friction. This is indicated by the result of the experiments recorded below.

Variation of Friction with Pressure.—Journal, 4 inches diameter, 6 inches long. Brass, 4 inches wide. Speed, 300 revolutions = 314 feet per minute. Temperature, 90 degrees F.

BATH OF LARD OIL

Pressure in pounds per square inch of bearing $p = \frac{W}{d \times l}$

Pressure per sq. in.	Coefficient of Friction $= \mu$	Product $p \times \mu$
520	0.0013	0.676
415	0.0016	0.664
310	0.0022	0.682
205	0.0031	0.635
153	0.0041	0.627
100	0.0067	0.670

BATH OF OLIVE OIL

Pressure in pounds per square inch of bearing $p = \frac{W}{d \times l}$

Pressure per sq. in.	Coefficient of Friction $= \mu$	Product $p \times \mu$
520	0.0013	0.676
468	0.0015	0.702
415	0.0017	0.705
363	0.0019	0.689
310	0.0021	0.651
258	0.0025	0.645
205	0.0030	0.615
153	0.0044	0.673
100	0.0069	0.690

coefficient of friction with bath lubrication varies inversely as ssure, or, in other words, the friction of the bearing is alto- independent of the pressure upon it; the first law of friction therefore read: *Temperature and velocity remaining constant, riction coefficient is proportional to the nominal pressure, and the rk done against friction is independent of the load, provided this* ceed *from* 400 *pounds to* 600 *pounds per square inch.* follows that the work done in overcoming friction is

independent of the load upon a machine, and that there is no appreciable increase in the loss due to friction from no load to full load. Under a load of 300 pounds per square inch and with a surface speed of 300 feet per minute, Mr. Tower found the coefficient of friction to be 0.0016 for oil-bath lubrication, and 0.0097 for a pad.

In the next place it was found that the coefficient of friction is inversely proportional to the temperature, other conditions remaining the same, as shown below.

Variation of Friction with Temperature.—Journal, 4 inches diameter, 6 inches long. Brass, 4 inches wide. Speed, 300 revolutions = 314 feet per minute. Load, 100 pounds per square inch of nominal area.

BATH OF LARD OIL

Temperature Degs. F.	Temperature (Degs. F. − 32) = t	Coefficient of Friction = μ	Product $t \times \mu$
120	88	0.0044	0.387
110	78	0.0050	0.390
100	68	0.0058	0.394
90	58	0.0069	0.400
80	48	0.0083	0.398
70	38	0.0103	0.391
60	28	0.0130	0.364

The second law of friction should therefore be stated: *Nominal pressure and velocity remaining constant, the coefficient, and therefore the work done against friction, is inversely proportional to the temperature of the bearing.*

This has also been very neatly demonstrated by a recent experimenter, Mr. Dettmar, whose machine is electrically driven, and therefore the consumption of current could be very accurately measured during a five hours' run at constant speed and voltage. As load and velocity remain constant throughout the test, a decrease in the loss due to friction could only occur with a diminution in the coefficient. The current fell off in the same ratio as the temperature increased.

The results of Tower's experiments seem to indicate that friction increases with the velocity, although not nearly in proportion to the square of the velocity as observed by Dettmar. As the result of the more exact determination possible with his machine, Dettmar found that friction increases very nearly as the 1.5 power of the velocity.

The mean values of the coefficient of friction for different lubricants, and with different methods of lubrication as observed by Mr. Tower, are given in the following table:

Variation of Friction with Different Lubricants.—Journal, 4 inches diameter, 6 inches long. Brass, 4 inches wide. Speed, 300 revolutions = 314 feet per minute. Temperature, 90 degrees F.

Lubricant	Coefficient of Friction	Max. Safe Pressure in Pounds per sq. Inch of Nominal Area
Olive oil	0.00172	520
Lard oil	0.00172	570
Sperm oil	0.00208	570
Mineral oil	0.00176	625
Mineral grease	0.00233	625

Nicolson's Experiments on Friction and Lubrication

The remainder of this chapter consists of an abstract of a paper read by Dr. J. T. Nicolson before the Manchester (England) Association of Engineers. The chief aim of the Nicolson experiments was to give some definite ideas about the resistance offered to the relative motion of lubricated surfaces, and they, in particular, related to journals and bearings as used in engineering practice. Experimental results obtained by Stribeck, Dettmar, Heimann, Lasche, and others have been utilized for framing rules which indicate that some views commonly held in regard to bearings are not correct. In particular, the idea that the length of the bearing should increase in proportion to the speed is shown to be erroneous.

Dry Friction

When one solid rubs upon another without any lubricant, the resistance offered to relative motion is due either to actual abrasion or to molecular interference between the two surfaces. Even though a metallic surface may appear to be perfectly smooth to the eye, its real condition, if viewed with a powerful microscope, resembles that of a rugged mountain system. When one surface is slid upon another, these surfaces exercise a resisting force. The following laws may be considered as generally covering the question of dry friction:

1. Within certain limits, the frictional resistance may be said to be proportional to the load, and to be independent of the extent of the surface over which the load is distributed; but when the pressure or load per unit area is large, the friction inceases at a greater rate than the load, or, in other words, the coefficient of friction increases with the pressure.

2. The coefficient of friction varies with the speed of motion. It is greatest when the motion is slowest, and when one body is just commencing to move relative to another, we have what is called friction of repose. This friction has been found by experiments to be from 0.3 to 0.4 for iron upon iron; for moderate speeds the friction varies from 0.15 to 0.25 for the same material; and for speeds from 10 to 90 feet per second, coefficients of from 0.10 to 0.20 have been found by experiments.

3. The friction of solids with no lubricant interposed has been found to diminish as the temperature increases. This is due to the fact that abrasion is easier at high temperatures.

Friction and Lubrication

When some lubricant is placed between moving bodies, the valleys or the uneven surfaces are leveled up, and the intensity of the molecular action is diminished. For the frictional work when a shaft rotates in a well lubricated bearing, we may state the following formula, expressing the frictional work done per revolution:

$$\text{Frictional work per revolution} = \frac{\pi d u W}{12} \text{ foot-pounds.}$$

In this formula,

d = diameter of shaft in inches,

u = coefficient of friction (0.15 on an average),

W = load on the bearing in pounds.

This formula holds true when there is plenty of oil, so long as the speed is small. If we take as an example the case of the spindle for a 10-inch lathe, running slowly, with a weight of 3000 pounds carried by the front bearing, which is 3½ inches in diameter, then the friction work per revolution is

$$\frac{\pi \times 3.5 \times 0.15 \times 3000}{12} = 412 \text{ foot-pounds per revolution.}$$

If a cut were 1/4 inch × 1/16 inch on soft steel, the cutting force would be, say, 3500 pounds, and on a 20-inch face-plate diameter the work spent in cutting per revolution would be

$$3500 \times \frac{20\pi}{12} = 18{,}300 \text{ foot-pounds.}$$

The work lost in friction by the journal is therefore 2.26 per cent of the useful work. A similar calculation for a 48-inch lathe would show a loss of about 10 per cent. These great frictional losses constantly occur with lathe spindles or other rotating shafts, revolving slowly, even when abundantly fed with oil, and indicate the necessity for using measures to preserve a separating film of oil between the shaft and bearing, and not to allow them to run in metallic contact. This is more difficult to accomplish at slow than at high speeds.

Automatic Lubrication

The following rules for supplying bearings with oil will give the best results in practice: If the oil is fed in by the ordinary cup and syphon, or by a ring or centrifugal method of supply, it should be made to flow onto the journal at the place where the pressure is least. The oil should therefore be fed from a point situated in the top rear quadrant of the bearing when the journal is loaded by gravity only, and the point should be further back the slower the speed. This applies, then, especially to the large lathes. If the loading of the journal is principally due to cutting force acting upward upon it, the feed should be placed in the bottom front quadrant, and nearer the front, the slower the speed of rotation. This meets the case of the smaller sized lathes.

The compromise ordinarily effected to enable the lubricant to enter, whatever may be the direction of the loading, is the simple one of fitting the oil cup on the top of the bearing. This seems almost the only thing to do in the case of automatic lubrication, but it is the correct position only when the resultant force upon the journal, due to gravity and cutting force, etc., acts nearly horizontally and from front to rear.

Forced Lubrication

When the lubricant is supplied by mechanical means at a fixed rate and at any required pressure, it must be fed in at the points of greatest

oil pressure in the bearing. For large lathes, where gravity is more important, the region of greatest pressure lies in the rear bottom quadrant. For small lathes, on the other hand, in which the force on the spindle acts upward, owing to the cutting force being relatively greater, the maximum oil pressures occur in the front top quadrant. To meet all contingencies, it would appear on the whole best, in the case of forced lubrication, either to force the oil in at the back of the bearing, well below the center, or preferably to fit three alternative branches from the oil pressure supply pipe to the back, top, and front, any one of which may be turned on at will to suit the conditions of working.

Frictional Resistance Due to Viscosity

In describing the phenomena occurring when a journal rotates in a bearing, we have, so far, not alluded to the nature or magnitude of the frictional resistance experienced when there is an abundant supply of lubricant completely separating the former from the latter, and preventing any metal-to-metal contact. It is frequently stated that "there is no friction without abrasion," or, in other words, that unless two metals rub against each other there can be no resistance due to relative motion. This, however, is not the case. When a film of lubricant is interposed between two metallic surfaces there is a resistance to relative motion of these surfaces due to the shearing or transverse distortion of the oil film.

This resistance does not depend on the load. It is governed only by the area of viscous fluid to be sheared and the viscosity of the oil, *i. e.*, the kind of oil and its temperature (with which the viscosity greatly alters), and it also gets greater the smaller the thickness of the film, so that if the shaft is a close fit within its bearing the resistance to motion will be greater than if the fit is an easy one.

There are very few cases in engineering practice where a journal rotates with a uniform thickness of oil around it, and it is only at very high speeds that this takes place. At moderate and low speeds the shaft moves to one side an amount depending on the speed of the load, the eccentricity for any given load becoming less the greater the speed. We have already said that the frictional resistance depends on the thickness of the oil film. Experiments have shown, however, that the thickening of the film on one side of the shaft is more than counteracted by the thinning of the film on the other, so that, in general, the friction gets greater when the journal becomes more eccentric.

Considering, therefore, the bearing running slowly, in which a lubricant has just formed a complete film all around the shaft, it will have its maximum amount of eccentricity, and the frictional resistance will, on this account, be large. As the speed increases, the eccentricity diminishes. The friction increases with the speed, but it diminishes, on the other hand, with the eccentricity. Experiments show that at first there is a decrease and then an increase, so that the coefficient of friction attains a minimum value which depends on the circumstances in each case. With further increase in speed, the diminishing

of friction, due to the lessening eccentricity, becomes insignificant, and after a certain interval the simple law of friction is followed, whereby friction increases in proportion to the velocity of rubbing.

For speeds greater than at from 20 to 80 feet per minute, the temperature of the oil film also exerts its influence. This temperature rises above that of the bearing, and its viscosity becomes reduced. The frictional resistance then increases less rapidly than in exact proportion to the speed. The faster the journal runs, the more the temperature of the oil film rises above that of the bearing, and the thinner or less viscous becomes the oil. Thus, for speeds from 50 to 90 up to about 450 feet per minute, the coefficient of friction is proportional to the square root of the speed of rubbing. For speeds between 450 feet and 800 feet per minute the friction increases more slowly, and varies as the fifth root of the velocity. For speeds as high as 3,600 feet per minute and upward, the influence of the speed disappears altogether, and the conclusion is arrived at that for bearings of high-speed generators, for instance, driven by steam turbines, whose rubbing speeds are nearly a mile a minute, the coefficient of friction is the same, whatever be the speed.

Application of Results of Experiments to the Design of Bearings

In endeavoring to apply the theoretical explanations and the experimentally found formulas, the question arises: What is the proper proportion of length to diameter, under any given condition, as to load, speed and kind of lubrication? According to hitherto accepted rules, the length of the bearing should increase with the load and with the number of revolutions. The experiments and formulas arrived at by the author indicate, however, that the heat developed in the bearing depends only upon the rubbing velocity, and is quite independent of the length of the journal. We cannot, therefore, hope to lower the temperature by lengthening the bearing. The heat generated increases as fast as the area for dissipating it increases, and, although by lengthening the journal the bearing pressure is diminished, the frictional resistance and the heat generated are increased. On the other hand, we know from experience that journals must be made long for high speeds, and the above calculations seem, at first sight, to be in conflict with accepted practice. The explanation of this is as follows: While it is true that the final temperature to which the bearing will rise after a long run, under a given load, and with a given lubricant, depends only on the diameter of the spindle and the speed of revolution, that is, only upon the rubbing velocity, and not at all upon the length of the journal, we have to remember that if the finally attained temperature be too high, the lubricant will be squeezed out unless the bearing pressure is low.

Another conclusion arrived at by these experiments, contrary to the view usually accepted, is that the length of the bearing must be greater, the slower the speed. This, however, is clearly correct, for the slower the speed, the greater difficulty has the shaft in dragging

in its supply of oil to meet the required demand, in opposition to the bearing pressure which is squeezing it out, and consequently the unit bearing pressure should accordingly be lower in order to enable the journal to maintain its oil film unbroken.

Journals for Heavy Loads at Slow Speed

One kind of bearing which presents special conditions, and which is frequently met with and has to be dealt with in practice, is that in which a journal has to run under a heavy load at a very slow speed. What we have here to guard against is the entire collapse or tearing asunder of the film of lubricant, owing to the slow speed at which the bearing is being worked; and when once the tearing of the oil film begins, the journal is unable to bring up a fresh supply, owing to its small surface speed.

Calculations and experiments show that it is impossible to give the large dimensions to the front bearing of a heavy lathe that would be necessary to prevent the oil film from being broken at such slow speeds; and, as a matter of fact, lathe spindles turning at the slow speeds used for heavy cuts inevitably run metal-to-metal with their bearings, giving rise to the high frictional resistance corresponding to the coefficient of friction of 0.15 for greasy metals. The work thus spent and wasted on friction and wear may amount to from 2 per cent to 10 per cent of the total useful work expended on cutting. From ¼ to 9 (according to size) horsepower is, therefore, wasted on the friction of the front journal alone when the lathe is running at these slow rates with a heavy job between centers. Even if the working pressure is light, and the thrust on the front journal is due to the standard cut only, it can be shown that 2½ per cent of the useful work is spent on friction on any size of lathe when the speeds are so low as to squeeze out the oil film.

We are here face to face with a very serious loss of power, and a correspondingly large amount of wear of the spindle and in the front bearing, not at all due to high speeds of rotation of the spindle; and it is owing to this that the elaborate arrangements for adjustment of the spindle in a lathe head-stock have to be provided.

It is impossible to give enough area in the front bearing of a lathe head-stock to prevent metallic contact of journal and brass at the slower speeds, if dependence is placed upon the lubricant being carried in by the ordinary action of the shaft's rotation, the supply being automatic. By using a force pump, however, and injecting a stream of moderately heavy oil into the bearing at the place where the pressure is greatest, it is possible to raise the journal off the brass even when at rest, and to keep it floating with a film of oil interposed between itself and the bearing when in motion, be that motion as slow and the load as high as it may. If metal-to-metal contact can in this way be prevented at slow, and by the ordinary methods at high speeds, there seems to be a possibility that wear may be entirely eliminated. If this be so, it follows that adjustments for wear are unnecessary, and instead of the elaborate and expensive designs of front and back bear-

ing which are now used, we may expect that a simple solid bush of ample thickness will meet every requirement. Such a solid bush, of hard bronze round the steel spindle, has a great deal to recommend it from the point of view of accuracy of fit, solidity, and stiffness, as compared with the intricate methods of adjustments now common.

Modern Practice for Lubricating Bearings

The chief distinction between the modern and the older methods of lubricating bearings lies in that the oil is no longer supplied drop by drop, as formerly, but in an abundant stream, the oil serving the purpose not only of lubrication, but of carrying away the heat.

For high-speed bearings, the principle most often adopted is that of the "closed circuit"; that is, the oil is used over and over again; after dropping off the journal into a collecting reservoir it is filtered and used anew, being automatically supplied to the journal at any suitable point. A cooling arrangement is sometimes fitted in the reservoir, so as to remove the heat from the oil, and consequently also from the bearings. The system of forced lubrication is also adopted to a great extent. The oil is then, by means of a pump or other suitable device, pressed in between the rubbing surfaces so that the journal floats on the heavy film of lubricant.

Lubricating Horizontal Bearings

The most common method of lubrication for horizontal journals running at high speed is the ring-oiled bearing, in which a loose ring, resting on the shaft, turns with it, dipping into the oil reservoir at the lower side, and bringing up the oil to the top surfaces of the journal, from where it flows over into the oil grooves. No ribs or other projections should be fitted on the rings, as such arrangements produce a resistance to their passage through the oil bath, and bring them to a standstill. At high speeds, the centrifugal force renders the flow of oil from the ring to the journal difficult, and scrapers are used for diverting the oil into the oil channels. These, however, should never touch the ring, as they will then stop its motion.

Self-oiling bearings having rings fast on the shaft are not much used. The fast ring cannot stick, but it requires a longer design of bearing. The ring may act as a collar where endwise motion is to be prevented; but as such motion is usually an advantage, the ring should ordinarily be attached to the shaft so that it can slide on its key. For high speeds the scraper may be used with fast rings, to overcome the centrifugal force.

Forced Lubrication

By the use of a pump to force the oil drawn from the reservoir into the bearing to the point of maximum pressure, the length of the bearing can be very much diminished even for the slowest speeds, especially for journals whose load and rotation direction do not change. For such bearings the length need, in all probability, not be more than equal to the diameter of the shaft. With such bearings there ought

hardly to be any wear at all. The system is extensively used in high speed steam engines and gas engines.

Grease as a Lubricant

Grease has certain advantages as a lubricant which make its use advisable in many places, but it should not be expected that its lubricating value is ever as good as that of the best oil, although it may give better results in some places. For example, grease is particularly valuable for bearings exposed to dust, for when it is forced into the bearings with compression grease cups, the grease flows outward around the journals, forming a perfect dust protector, both because it seals the bearing and because the outward flow of the grease repels the intrusion of dust and abrasive particles. In such places the best oil would not give nearly as good results as grease, although its lubricating quality is generally considerably greater. On the other hand, the use of grease for lubricating machinery of a mill would not be advisable where the power factor is important in the cost of production. For example, some tests were made several years ago in the lubrication of the machinery of a flour mill that was run by two water wheels of the same size, as stated by Mr. W. F. Parish, Jr., in a paper read before the North Eastern Coast Institute of Engineers and Ship Builders. In making the trial of grease the section driven by No. 1 water wheel was fitted up first. As the grease displaced the oil it was noticed that the speed of the mill decreased with a consequent decrease of production. At first no one thought that the grease was responsible for the slowing down, but as the second part of the mill slowly decreased in speed as the use of the grease was extended, a consulting engineer was called in, who suggested that, in view of the fact that speed had decreased with the introduction of grease, it was responsible for the loss of production. Upon the resumption of the use of oil the speed of the machinery again rose to its original figure, proving conclusively that the lubricating value of the grease was inferior to that of oil and that the difference was an important factor in the mill's production. The relative value of different oils in the lubrication of textile mills has long been known to be important in influencing the cost of production.

CHAPTER V

BEARING METALS*

By conservative estimate the value of the bearing metal in actual use in the United States exceeds $50,000,000, of which fully one-half is used on the locomotives and rolling stock of the railroads of this country. In view of the increase in the amount of machinery and rolling stock steadily going on, and the constant wearing out and replacement of bearings, the value and importance of this product cannot be overestimated. The life of a machine is largely dependent upon its bearings, and in view of this the fact that knowledge in regard to bearing metals and alloys is not more general, is remarkable. Again, the nature of the production of these alloys is such that, while in some cases they have been patented and are manufactured under trade names, in many others they are made up of scrap, with widely varying proportions of the different metals incorporated in their structure; on this account, probably no phase of engineering progress in machinery construction and operation is the subject of more difficulty and dissatisfaction.

The fact that bearing metals have to be taken largely on faith or else tested by more or less complicated processes for their chemical constituents, and the further fact that trade conditions in this field are such that the properties of metals are apt to vary greatly in different shipments, is a matter of grave import to the average machinery manufacturer and operator. Only the largest consumers can afford to make the necessary tests and investigations of a given consignment in order to test its quality, and, in addition, a definite amount of special knowledge is requisite for this purpose, in view of the often wide variations in properties of the alloy, with a comparatively small variation in the proportion of its constituents. Under these circumstances the average small machine shop and consumer in this field accepts bearings on faith alone and is dependent largely upon the commercial reputation of the firm furnishing the material. That this should not be so is a foregone conclusion, but in view of this condition of affairs the rapid progress of the firm whose standing can be relied upon in this field is readily explained.

Bearings are usually composed of alloys of copper, lead, tin, antimony and zinc, and are known as babbitt metal (after the name of the discoverer of this material), white metal, brass, phosphorous bronze, and various other trade names. Quite a number of these are patented, such as "plastic bronze," etc., but many are sold merely under trade name, and in some instances are of uncertain composition.

The principal qualities which a good bearing metal should have are good anti-frictional properties, so as to withstand heavy loads at high speed, without heating, and, second, sufficient compressive strength so

*MACHINERY, August, 1909.

as to neither be squeezed out of place under high pressure, nor crack or break when subjected to sudden shocks. In addition to these, many other properties must be considered in a choice of bearing metals depending upon the special purpose for which the material is to be utilized. Temperature variation is often an important factor, especially in refrigerating plants, and the coefficient of expansion should be considered to prevent undue binding, with consequent destruction of the bearing and the possible variation in other properties, such as brittleness, ductility, etc., under various temperature conditions. In addition, many bearings must operate under conditions where they are subject to chemical action, whether that of brine or ammonia in refrigerating plants, or acids, alkalies, etc., in chemical establishments, and in dynamo and motor construction and operation, the electrical conductivity must be considered as well. This statement applies equally to all bearings incorporated in electrical machinery, where these must serve as electrical conductors such as the bearings for the wheels in trolley cars, etc.

The chief properties to date which have been developed to a greater extent than others in machine design are those of friction elimination and resistance to compressive loads. Theoretically, all metals have the same friction, according to Thurston, and the value of the soft white alloys for bearings lies chiefly in their ready reduction to a smooth surface after any local impairment of the surface, such as would result from the introduction of foreign metal between the moving surface and the bearing. Under these circumstances the soft alloys flow or squeeze from the pressure into the irregularity, forming a larger area for the distribution of the pressure, thus diminishing its amount per unit of area. Further, the larger area over which the pressure is extended the less becomes the liability to overheating and consequent binding. Under these circumstances the frictional properties of a bearing are in inverse ratio to their compressive resistance, and invariably the best bearing alloys, from a high speed standpoint, are unsatisfactory for utilization in heavy machinery. The recent introduction of an iron or steel grid to form the base of the main bearing, and to be filled with much softer bearing metals than could ordinarily be installed, or in some cases even graphite, is a step in the right direction and presents possibilities of great importance in this field of machine development.

Lead flows more easily under pressure than any of the common metals, and hence it has the greatest anti-frictional properties. Of course, a number of metals exceed lead in this property, but their cost or some other factor render them unavailable. Lead is the cheapest of the metals, except iron, and in comparison to the other metals used in the formation of bearing alloys their relative prices are somewhat in the following order per one hundred pounds: Lead, $4; zinc, $5; antimony, $9; copper, $13; and tin, $30 or more. It can thus be seen that the more lead that is used in a given bearing, the softer it is, the less friction it possesses, and the cheaper it can be furnished. It is, however, too soft to be used alone, as it cannot be retained in the recesses of the

bearing even when used simply as a liner and run into a shell of brass, bronze or gun-metal or some other alloy. Various other metals have been alloyed with it, such as tin, antimony, copper, zinc, iron and a number of non-metallic compounds, such as sodium, phosphorus, carbon, etc., and the effect of the different ingredients is to-day fairly well understood.

If antimony is added to the lead it increases its hardness and brittleness, and if tin is added as well it makes a tougher alloy than lead or antimony alone. Nearly all of the various babbitt metals on the market are alloys of lead, tin and antimony in various proportions, with or without other ingredients added. In such babbitts the wear increases with the antimony as a general thing, and the price with the

COMPOSITION OF BEARING METALS.

Alloys	Lead.	Tin.	Antimony.	Copper.	Zinc.	Other Constituents.
Babbitt 1	80.00	20.0	.....	.....	.....	.....
Babbitt 2	73.0	21.0	7.0	.....	.....	.....
Babbitt 3	70.0	10.0	20.0	.....	.....	.....
Babbitt 4	80.5	11.5	7.5	0.5	.....	.....
Babbitt 5	0.5	68.0	.....	1.0	31.5	.....
Babbitt 6	....	20.0	.....	.....	80.0	.....
Babbitt 7	.....	86.0	10.0	4.0	.....	.....
White metal	83.0	.....	12.0	6.0	.....	.....
White Brass		64 0	.....	2.00	34.0	.....
Magnolia metal	80.00	4.75	15.0	trace		$Bi = 0.25$
Car brass lining	80.5	11.5	7.5	0.5	.....	.....
Ajax plastic bronze	80.0	5.0	.....	65.0	.....	.....
Ajax metal	11.5	11.5	.....	77.0	.....	.....
P. R. R. car brass, B	15.0	8.0	.....	77.0	.....	$P = 0.80$
S bearing metal	9 5	10.0	....	79.7	.....	.....
Delta metal	5.1	2.4	.....	92.4	.	$Fe = 0.1$
Camelia metal	14.8	4.8	.....	70,2	10.2	$Fe = 0.5$
Tempered lead	98.5	0.08	.....	0.11	.....	$Na = 1.30$

Bi = bismuth; P = phosphorus; Fe = iron; Na = sodium.

tin. The higher antimony babbitts are used in heavy machinery, as they are harder, while those low in antimony are used in high speed machinery. The steady increase in speed at which various operating units are maintained is responsible for a wide deficiency in this field in the duty performed by the bearing metal. The chief difficulty to-day in the operation of the modern turbine is undoubtedly the maintenance of satisfactory bearing surfaces. Soft babbitts have never sufficient strength to sustain the weight and shock of heavy machinery bearings and can only be used as liners. The tendency to increase in speed as well as weight or size of machinery is limited to-day simply by the satisfactory operation of the bearing metal itself.

Undoubtedly, in investigations in this field, sufficient attention has not been paid to the effect of temperature on the bearing properties of the alloys used for these bearings. More rigid investigation in this field and limitations in regard to the temperatures permissible, with

means for maintaining these within fairly close limits, will undoubtedly result in a great increase in the possibility of improvements in speed and weight of various types of machinery. More or less extensive experiments along these lines are being conducted in regard to the bearings used in turbine construction, since the speed here has rendered the problem an acute one and is necessary for efficient operation of the turbine itself.

The accompanying table will doubtless prove interesting as showing the various constituents of the more or less common bearing metals now on the market. The original babbitt metals were very expensive materials, on account of the proportions of the more expensive metals found in them, and have been much modified in actual practice. A wide deviation in the composition of babbitt is readily shown in the first part of the table. The first babbitt is a fairly good alloy for high speed machinery, but is not very hard. Its melting point is about 500 degrees F.; in fact, the properties of all allows or bearing metals can be very widely deduced from their melting point. The second babbitt is somewhat harder and melts at a higher point. Both of these are used largely for lining purposes. The fourth babbitt is used very widely for heavy machinery. All of the babbitts mentioned have been fairly successful.

Babbitt 6 has good wearing properties, but cannot be used for high speeds. Most of the other metals included in the table where copper is not used in excess can be regarded as in the same class as babbitts. The "white" class has a fairly good electrical conductivity, much greater than that of ordinary babbitt, and is used in the bearings of generators, motors, electric cars, etc. A rather interesting thing about the alloys containing sodium is based upon the fact that sodium by oxidation produces a material which will saponify with the oil used in the bearing and produce soap, thus assisting lubrication. The extent and amount of such action is scarcely as yet understood, and practically no experiments have been made with this investigation in view. Possibilities along this line, however, are great, not only for this particular alloy, but for many others not as yet considered.

The other alloys included in the table consist to a very great extent of copper, tin, and lead, and usually have a thin liner of lead or some soft babbitt, and hence wear much better than an entire bearing of the soft babbitt. The tendency to wear decreases with increase of lead and increase of tin. Increase of lead, of course, affects the frictional quantities of the alloy and hence its heating properties. A certain amount of other metal, however, is necessary to keep the lead from separating from the copper. A study of the table itself, with a knowledge of the various properties of the metals themselves, will show conclusively the bearing properties of the different alloys. Pure copper is so tenacious that it is practically impossible to work it with any tools whatever without preliminary treatment, and this same property extends into and influences its bearing properties.

The structure and treatment has more to do with the production of suitable bearing alloy than is generally considered. The tensile

strength of solder and, in fact, all alloys, decreases very greatly with the pressure or tension at the time of solidification, and in general the cooling process, and the influence on tempering, affect the structure and consequently compressional resistance to a much greater extent than is generally considered. The same properties which influence the hardening and tempering of steel by heat, extend to a greater or less degree to all metals and are much more pronounced in alloys than in the simple elements.

Sufficient has been said to show the importance of the bearing metals in machine design to-day, and to give a brief outline of the situation in regard to the character and type of the metals available, with a few of the properties of the same. The possible combinations of alloys for this purpose are very great. Comparatively little progress has been made along investigations covering all possible alloys of different materials in different proportions. The recent introduction and placing

COMPOSITION OF BRONZES

	Parts.
White Metal:	
Tin	7.6
Copper	2.3
Zinc	83.3
Antimony	3.8
Lead	3.0
Hard Bronze for Piston Rings:	
Tin	22.0
Copper	78.0
Bearings—Wearing Surfaces, etc.:	
Copper	6
Tin	1
Zinc	¼
Naval Brass:	
Copper	62.0
Tin	1.0
Zinc	37.0
Brazing Metal:	
Copper	85.0
Zinc	15.0
Anti-friction Metal:	
Copper—(best refined)	3.7
Banca tin	88.8
Regulus of antimony	7.5
Well fluxed with borax and rosin in mixing.	
Bearing Metal—(Pennsylvania Railroad):	
Copper	77.0
Tin	8.0
Lead	15.0

on the market of a large number of metals, such as calcium, etc., very common in nature, and ultimately bound to be furnished at a very low rate, and many of them possessing very suitable properties for bearing alloys, is undoubtedly bound to influence the situation; and various engineering devices, such as the steel grid, recently developed, will undoubtedly receive attention in the immediate future with consequent increase in efficiency in this field. The development is but at its inception along this line, and standardization of the alloys at hand should

668572

be at once insisted upon and maintained by the various machine manufacturers. This latter is the chief difficulty to-day in commercial development. The scientific end will largely take care of itself. The effect of different metals upon alloys by their presence in various proportions can be foretold to-day largely from theoretical considerations; but that the commercial situation to-day, however, is unsatisfactory, is a foregone conclusion.

The table on the preceding page, giving the composition of bronzes used by the U. S. Navy Department, was contributed to MACHINERY'S Data Sheets by Mr. F. W. Armes, and is reproduced from Data Sheet No. 31, April, 1904.

CHAPTER VI

ALLOYS FOR BEARINGS*

In an important article, in the *Journal of the Franklin Institute* for July, 1903, Mr. G. H. Clamer discussed the advantages and disadvantages of various compositions and alloys for bearings, and especially alloys for railway journal brasses. He also quoted the results of many tests on various compositions made on an Olsen testing machine designed by Prof. Carpenter of Cornell University. The present chapter is devoted to an abstract of Mr. Clamer's article, and contains all the most important features of his discussion on a subject on which not so much is generally known as would be desirable.

Upon close examination we find that there are but few metals available for bearings. As mentioned in the previous chapter, they are copper, tin, lead, zinc and antimony. While other metals may be introduced in greater or less proportions, the five mentioned must constitute the basis for the so-called anti-friction alloys. The combinations of these metals now used may be grouped under the two heads of white metal and bronze. Bronze is the term which was originally applied to alloys of copper and tin as distinguished from alloys of copper and zinc; but gradually the term "bronze" has become applied to nearly all copper alloys containing not only tin, but lead, zinc, etc., and no sharp lines of demarcation exist between the two.

Principal Requirements of Bearing Metals

White metals are made up of various combinations of lead, antiony, tin, copper and zinc, and may contain as few as two elements, all five. Bronzes are made up of combinations of copper, tin, lead zinc, all of them containing copper and one or more of the other ements. The essential characteristics to be considered in any alloy or bearings are composition, structure, friction, temperature of run-

* MACHINERY, October, 1903.

ning, wear on bearing, wear on journal, compressive strength, and cost.

It is utterly impossible to have one alloy reach the pinnacle of perfection in all of these requirements, and so it is important to study the possible compositions and determine for what purpose each is adapted. It has been shown that a bearing should be made up of at least two structural elements, one hard constituent to support the load, and one soft constituent to act as a plastic support for the harder grains. Generally speaking, the harder the surfaces in contact, the lower the coefficient of friction and the higher the pressure under which "gripment" takes place. It would seem for this reason that the harder the alloy the better; and it was with this idea in mind that the alloys of copper and tin were so extensively used in the early days of railroading. A hard, unyielding alloy for successful operation must, however, be in perfect adjustment, a state of affairs unattainable in the operation of rolling stock. For this reason the lead-lined bearing was introduced and the practice of lining bearings has now become almost universal in this country.

General Comparison between Hard and Soft Alloys for Bearings

While the harder the metals in contact the less the friction, there will also be the greater liability of heating, because of the lack of plasticity, or ability to mold itself to conform to the shape of the journal. A hard, unyielding metal will cause the concentration of the load upon a few high spots, and so cause an abnormal pressure per square inch on such areas, and produce rapid abrasion and heating.

The bronzes will, generally speaking, operate with less heat than softer compositions, while the softer metals will wear longer than the harder metals. In the matter of wear of journal, however, the soft metals are more destructive. Particles of grit and steel seem to become imbedded in the softer metal, causing it to act upon the harder metal of the journal like a lap. High-priced compositions are being used that have but little resistance to wear compared with cheaper compositions, and low-priced alloys are in service that are not cheap at any price. It is generally conceded that soft metal bearings cause a marked decrease in the life of the journal, and yet they have many marked advantages, as we shall presently see.

Alloys Containing Antimony

1. *Lead and Antimony:* These metals will alloy in any proportion. With increase in antimony the alloy becomes harder and more brittle. It has been determined that when it is made of 13 parts antimony and 87 parts lead, the composition will be of homogeneous structure. If there is a greater proportion of antimony, free crystals of antimony appear, imbedded in the composition; and if less than 13 per cent, there appear to be grains of the mixture itself imbedded in the lead as the body substance.

According to one writer, an anti-frictional alloy should consist of hard grains, to carry the load, which are imbedded in a matrix of plastic material, to enable it to mold itself to the journal without undue

heating. Such a condition would be met in a lead and antimony alloy having above 13 per cent antimony, but it is not advisable to use in any case more than 25 per cent antimony, as the composition would be too brittle. The same writer claims that alloys having from 15 to 25 per cent antimony are the best adapted for bearings.

Mr. Clamer, however, does not agree with this, and says that alloys containing below 13 per cent antimony can likewise be said to consist of hard grains consisting of the composition itself, imbedded in the softer material, lead, as mentioned above. He says: "It has been my experience that, although the friction may be higher in such alloys, the wear is greatly diminished, and where pressures are light, causing no deformation, this is a great advantage. I have seen many instances in service where alloys between 15 per cent and 25 per cent were greatly inferior to alloys between 8 per cent and 12 per cent, owing to their frequent renewal due to wear. It will perhaps be interesting to hear that the Pennsylvania Railroad Company, at the suggestion of Dr. Dudley, their chemist, have adopted the 13 per cent antimonial lead alloy as a filling metal for bearings in order to obtain the best results. In a general way my own work in the subject has confirmed the opinion that lead is the best wear-resisting metal known, and that with increasing antimony, or increasing hardness and brittleness, the wear becomes more marked. This is due to the splitting up of the harder particles."

The friction, as we may naturally expect, becomes less with increase of antimony, and the temperature of running likewise diminished when running under normal conditions; but the harder the alloy, the more difficulty is experienced in bringing it primarily to a perfect bearing, and the greater the liability of heating through aggravated conditions. The wear on the journal one would naturally expect to be decreased with increasing hardness; but this journal wear is in all probability not due so much to the alloy directly as it is to the fact that the softer metals collect grit, principally from the small particles of steel from the worn journal, and, acting as a lap, cause rapid wear. With the harder metals these particles are worked out without becoming imbedded.

The cost of the lead and antimony alloy is the least which can be produced. It can be used in many services where higher priced alloys are being relied upon mainly for their high cost. It is one of the greatest extravagances of large industrial establishments to use materials that are too good for certain uses, and even perhaps unsuited, under the supposition that they must be good because they paid a good price for them. This fact has no greater exemplification than in the purchase of babbitt metal, and is due to the great uncertainty which exists, not only among consumers, but among manufacturers, many of whom carry on their business much the same as the patent-medicine man.

2. *Lead, Antimony, and Tin:* It should not be assumed that antimony-lead is the cheapest alloy to use under all circumstances; not so, for when high pressures are to be encountered, tin is a very desirable

adjunct. Tin imparts to the lead-antimony alloy rigidity and hardness without increasing brittleness, and can produce alloys of sufficient compressive strength for nearly all uses. The structure of a triple alloy of this nature is quite complicated, and not yet sufficiently defined.

The cost of the alloy increases with increase of tin; but for certain uses, where sufficient compressive strength cannot be gotten by antimony, because of its accompanying brittleness, it is indispensable, and will answer in nearly every case where the tin basis babbitts are used.

3. *Tin and Antimony:* These are seldom used alone as bearing alloys, but are extensively used for so-called Brittania ware, and in equal proportions for valve seats, etc.

4. *Tin, Antimony, and Copper:* This combination is what is known as genuine babbitt, after its inventor, Isaac Babbitt, who presumably was the first man to conceive the idea of lining bearings with fusible metal. The formula, which for no arbitrary reason he recommended, is as follows:

Tin	89.1
Antimony	7.4
Copper	3.7

This formula is still considered the standard of excellence in the trade, and has been adopted by many of the leading railroads, the United States Government, and many industrial establishments. It is used in the majority of cases where cheaper composition would do equally as well. It is the most costly of all bearing alloys because of the high content of tin.

5. *Tin-Antimony-Lead-Copper:* This quadruple combination of metals cannot be satisfactorily described, as it would no doubt take years of study to fathom the complicity of the metallic combinations here represented. Suffice it to say that lead, although of itself a soft metal, renders this alloy, when added in but small proportions, harder, stiffer, more easily melted and superior in every way to the alloy without it, and yet consumers will raise their hands in horror when a trifling percentage of lead is found in their genuine babbitt. This is one of the instances where cheapening of the product is beneficial.

The foregoing represents the more important combinations of alloys of tin and lead basis. These are of far more importance in the arts than the white metals, the main portion or basis of which is zinc.

At various times new combinations of zinc have been proposed, but, with very few exceptions, they have not come into popular use for two reasons: First, because of the great tendency of zinc to adhere to iron when even slightly heated. What is technically known as galvanizing the journal is effected under these conditions. Second, because of the brittleness produced under the effects of heat, such as is produced by friction when lubrication is interfered with, and consequent danger of breakage.

Bronzes

Bronze is the term which originally was applied to alloys of copper and tin as distinguished from alloys of copper and zinc.

1. *Copper and Tin:* This, according to our general conception of the word, is a bronze only when the copper content exceeds that of the tin. According to the proportions in which the metals exist, it has widely different properties. In general, the alloy hardens when tin is present up to proportions of 30 per cent or a little over, and when this limit is exceeded, it takes on more and more the nature of tin until pure tin is reached. From a scientific point of view this alloy is one of the most interesting, and has attracted the attention of many investigators, who have spent years of study on it, to learn its various properties and explain its constitution.

The alloys which interest us most, however, are those which are so constituted as to be adapted for bearing purposes. These would be said to contain from 3 to 15 per cent tin, and from 85 to 97 per cent copper. The alloy of tin containing a small percentage of copper is often used as a babbitt metal, but this comes under the class of white metals, which have already been discussed. Bronze containing above

COPPER AND TIN, AND COPPER, TIN, AND LEAD SERIES

	Copper	Tin	Lead	Friction	Temp. above Room	Wear in Grams
1	85.76	14.90	.....	13	50	.2800
2	90.67	9.45	.....	13	51	.1768
3	95.01	4.95	.....	16	52	.0776
4	90.82	4.62	4.82	14	53	.0542
5	85.12	4.64	10.64	18½	56	.0380
6	81.27	5.17	14.14	18½	58	.0327
7	75?	5?	20?	18½	58	.0277
8	68.71	5.24	26.67	18	58	.0204
9	64.34	4.70	31.22	18	44	.0130

15 per cent of tin has been recommended at various times for bearings, owing to its hardness, but very unwisely, for such a bearing demands mechanical perfection and perfect lubrication. It has no plasticity of its own, and as soon as the oil film is interrupted, rapid abrasion and "gripment" take place, with hot boxes as the result. The very erroneous idea is still held by many, that to resist wear and run with the least possible friction, a bearing alloy must be as hard as possible. It is true that hard bodies in contact move with less friction than soft ones; but the alloy which is the least liable to heat and cause trouble is the one which will stand the greatest amount of ill use; by this is meant an alloy which has sufficient plasticity to adapt itself to the irregularities of service without undue wear.

The alloys of copper and tin were used extensively some twenty or twenty-five years ago, and were considered the standard for railroad and machinery bearings. The old alloy, known as "Cannon Bronze," containing 7 parts copper and 1 part tin, is still being specified by some few unprogressive railroad men and machinery builders.

2. *Copper, Tin, and Lead:* This composition is now the recognized standard bearing bronze, its advantage over the bi-compound coming from the introduction of lead. The bronze containing lead is less liable to heat under the same state of lubrication, etc., and the rate of wear is much diminished. For these reasons and the additional fact that

lead is cheaper than tin, it seems desirable to produce a bearing metal with as much lead and as little tin as possible. The metal known as Ex. B. composition (tin 7 per cent, lead 15 per cent, copper 78 per cent) is stated to be the best that can be devised. This alloy contains the smallest quantity of tin that will hold the lead alloyed with the copper. By adding a small percentage of nickel, however, to the extent of one-half to 1 per cent, a larger proportion of lead may be used, and successful bronzes have been made by this process, which contained as much as 30 per cent lead. Such bronzes, containing a large amount of lead, through the addition of nickel, are known in the trade as "Plastic Bronzes" and are a regular commercial article. The table on page 44 gives the results of tests on different compositions of bronzes.

CHAPTER VII

FRICTION OF ROLLER BEARINGS*

During the years 1904-05 a series of tests on roller bearings was conducted at the Case School of Applied Science, Cleveland. A complete report of these tests was published by Professor C. H. Benjamin in the October, 1905, issue of MACHINERY, of which the following is an abstract. An attempt was made in these experiments to compare roller bearings with plain cast iron bearings and with babbitted bearings under similar conditions. Four sizes of bearings were used in the tests, measuring respectively 1 15-16, 2 3-16, 2 7-16 and 2 15-16 inches in diameter. The lengths of journals were four times the diameters.

The bearings were in two parts and were held in a circular yoke by setscrews. This yoke carried two vertical spindles, one above and one below, on which were placed the weights for loading the bearings. The friction was measured either by the deflection of the compound pendulum thus formed, or, as in most of the experiments, by weighing its tendency to deflect by means of an attached cord running over a pulley and carrying a scale pan, as shown in Fig. 19. The shafts or journals used were of ordinary machinery steel, carefully turned to size and having a smooth finish. These shafts were rotated at the speeds shown by means of a belt and pulley. The cast-iron bearings used for comparison were cast whole and bored to size, but the babbitted ones were in halves and were held the same as the roller bearings.

In beginning an experiment, a pointer on the lower end of the pendulum was brought to a zero mark vertically beneath the center of the shaft by adjusting the screws in the yoke. After the shaft began to

* MACHINERY, October, 1905.

revolve the pointer was held to the zero mark by putting weights on the scale pan. The product of the force thus applied to the pendulum by the distance of the point of application from the center of shaft gave the moment of friction, and dividing this by the radius of journal gave the friction at the surface of the journal. Dividing this again by the total weight on the journal gave the coefficient of friction.

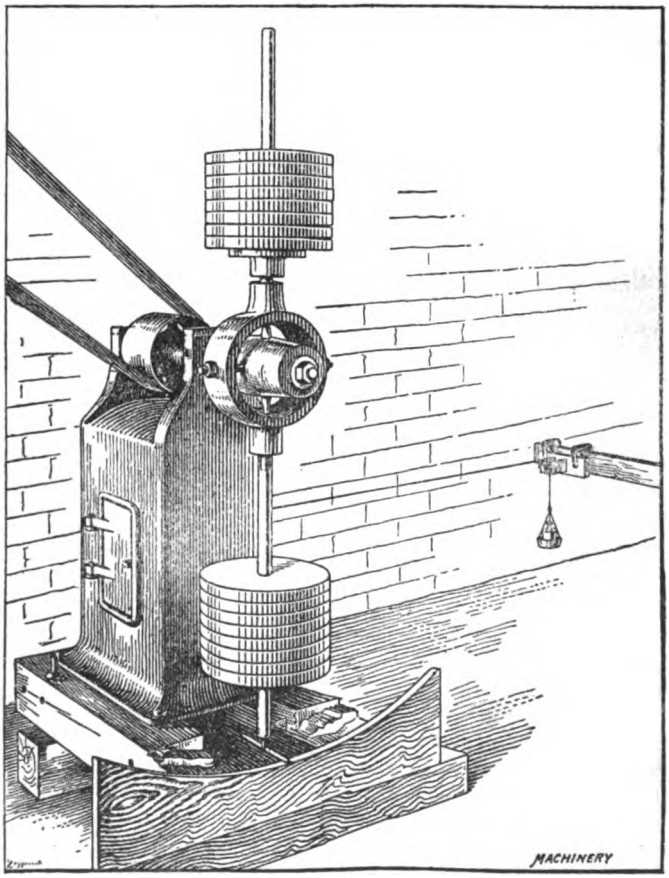

Fig. 19. Apparatus for Testing Roller Bearings

In the first set of experiments Hyatt roller bearings were compared with plain cast iron sleeves at a uniform speed of 480 revolutions per minute, and under loads varying from 64 to 264 pounds. The cast iron bearings were thoroughly and copiously oiled, the lubrication being rather better than would be the case in ordinary practice. Table I shows the results of the test on one bearing in detail, and from this it is seen that the value of f, the coefficient of friction, diminishes as

the load increases, or in other words, the friction did not increase as fast as the load. This holds true as a general rule in all the roller bearings, but not generally in the plain bearings, either cast iron or babbitt.

Table II gives a summary of this series of experiments for the different sizes of journals, the different loads being the same as in Table I. The relatively high values of f in the 2 3/16 and 2 15/16 roller

TABLE I.

Journal 1 15-16 inches in Diameter. 480 Revolutions per minute.

Total Load, pounds.	Friction.		Values of f.	
	Hyatt	Plain.	Hyatt.	Plain.
64.2	2.84	10.24	.036	.160
114.2	3.27	12.10	.029	.106
164.2	4.21	19.10	.026	.116
214.2	4.78	22.85	.022	.104
264.2	5.15	26.10	.019	.099
Average	.....	.....	.026	.117

bearings were due to the snugness of the fit between the journal and the bearing, and show the advisability of as easy a fit as in ordinary bearings.

The same Hyatt bearings were used in the second set of experiments, but were compared with the McKeel solid roller bearings and with plain babbitted bearings freely oiled. The McKeel bearings contained rolls turned from solid steel and guided by spherical ends fitting re-

TABLE II.

Values of Coefficient of Friction f. Speed 480 Revolutions per minute.

Diameter of Journal.	Hyatt Bearing.			Plain Bearing.		
	Max.	Min.	Ave.	Max.	Min.	Ave.
$1\frac{15}{16}$	.036	.019	.026	.160	.099	.117
$2\frac{3}{16}$	.052	.034	.040	.129	.071	.094
$2\frac{7}{16}$	.041	.025	.030	.143	.076	.104
$2\frac{15}{16}$	.058	.049	.051	.138	.091	.104

cesses in cage rings at each end. The cage rings were joined to each other by steel rods parallel to the rolls. The same apparatus was used as in the former tests, but heavier loads were used and the machine was run at a slightly higher speed. Table III shows the detailed results of experiments on one size of journal, and is similar to Table I. The last value given for the Hyatt bearing shows distortion of the roller due to the load and indicates the limit for this size. This is omitted in getting the averages. There is the same indication as in Table I of a decrease of f with increase of load, and this was noticed in all the tests. The results for the babbitt metal are not as uniform as the others on account of the difficulty of balancing.

Under a load of 358.3 pounds the solid roller bearing showed an end thrust of about 20 pounds, which would account for the difference in friction between that and the Hyatt. Table IV gives a summary of the tests in this series and may be compared with Table II. The relatively high values for the Hyatt 2 7-16 bearing must be due to a slight cramping of the rolls due to too close a fit, as was noted in some of the former experiments. Under a load of 470 pounds, the Hyatt

TABLE III.

Journal 1 15-16 inches in Diameter. Speed of 560 Revolutions per minute.

Total Load.	Friction.			Value of f.		
	Hyatt.	McKeel.	Babbitt.	Hyatt.	McKeel.	Babbitt.
118.8	3.64	3.77	8.88	.032	.033	.074
162.8	3.77	4.24	8.97	.023	.026	.055
211.8	4.04	5.24	8.97	.019	.025	.042
260.8	4.31	5.87	8.97	.016	.021	.034
309.8	4.57	6.46	10.15	.015	.021	.033
358.8	4.71	6.78	10.75	.013	.019	.030
407.8	4.84	7.27	11.98	.012	.018	.029
456.8	37.70	7.81	20.90	.....	.017	.046
Averages	.....	.....	.....	.0186	.0225	.043

bearings developed an end thrust of 13.5 pounds and the McKeel one of 11 pounds. This end thrust is due to a slight skewing of the rolls and would vary, sometimes even reversing in direction.

The babbitt bearing is a slight improvement over the cast-iron sleeve, but the difference is quite as apt to be due to improved lubrication. (Notice the variation in the averages for the various sizes in Table IV).

In conclusion it may be said that the friction of the roller bearing

TABLE IV.

Values of Coefficient of Friction f. Speed 560 Revolutions per minute.

Diameter of Journal.	Hyatt Bearing.			McKeel Bearing.			Babbitt Bearing.		
	Max.	Min.	Ave.	Max.	Min	Ave.	Max.	Min.	Ave.
1 15/16	.032	.012	.018	.033	.017	.023	.074	.029	.043
2 1/16	.019	.011	.014	.....	.....	.....	.088	.078	.083
2 7/16	.042	.025	.032	.028	.015	.021	.114	.088	.096
2 15/16	.029	.022	.025	.039	.019	.027	.125	.089	.107

is shown to be from one-fifth to one-third that of a plain bearing at moderate loads and speeds. It is also noticeable that as the load on a roller bearing increases the coefficient of friction decreases. It was found by the experimenters that a slight change in the pressure due to the adjusting nuts was sufficient to increase the friction considerably. In the McKeel bearing the rolls bore on a cast-iron sleeve and in the Hyatt on a soft steel one. If roller bearings are properly adjusted and not overloaded, a saving of from 2/3 to 3/4 of the friction may be reasonably expected.

No. 50. Principles and Practice of Assembling Machine Tools, Part I.

No. 51. Principles and Practice of Assembling Machine Tools, Part II.

No. 52. Advanced Shop Arithmetic for the Machinist.

No. 53. Use of Logarithms and Logarithmic Tables.

No. 54. Solution of Triangles, Part I. —Methods, Rules and Examples.

No. 55. Solution of Triangles, Part II. —Tables of Natural Functions.

No. 56. Ball Bearings.—Principles of Design and Construction.

No. 57. Metal Spinning.—Machines, Tools and Methods Used.

No. 58. Helical and Elliptic Springs.—Calculation and Design.

No. 59. Machines, Tools and Methods of Automobile Manufacture.

No. 60. Construction and Manufacture of Automobiles.

No. 61. Blacksmith Shop Practice.—Model Blacksmith Shop; Welding; Forging of Hooks and Chains; Miscellaneous.

No. 62. Hardness and Durability Testing of Metals.

No. 63. Heat Treatment of Steel.—Hardening, Tempering, Case-Hardening.

No. 64. Gage Making and Lapping.

No. 65. Formulas and Constants for Gas Engine Design.

No. 66. Heating and Ventilation of Shops and Offices.

No. 67. Boilers.

No. 68. Boiler Furnaces and Chimneys.

No. 69. Feed Water Appliances.

No. 70. Steam Engines.

No. 71. Steam Turbines.

No. 72. Pumps, Condensers, Steam and Water Piping.

No. 73. Principles and Applications of Electricity, Part I.—Static Electricity; Electrical Measurements; Batteries.

No. 74. Principles and Applications of Electricity, Part II.—Magnetism; Electro-Magnetism; Electro-Plating.

No. 75. Principles and Applications of Electricity, Part III.—Dynamos; Motors; Electric Railways.

No. 76. Principles and Applications of Electricity, Part IV.—Electric Lighting.

No. 77. Principles and Applications of Electricity, Part V.—Telegraph and Telephone.

No. 78. Principles and Applications of Electricity, Part VI.—Transmission of Power.

No. 79. Locomotive Building, Part I.—Main and Side Rods.

No. 80. Locomotive Building, Part II. —Wheels; Axles; Driving Boxes.

No. 81. Locomotive Building, Part III. —Cylinders and Frames.

No. 82. Locomotive Building, Part IV. —Valve Motion.

No. 83. Locomotive Building, Part V —Boiler Shop Practice.

No. 84. Locomotive Building, Part VI. —Erecting.

No. 85. Mechanical Drawing, Part I. —Instruments; Materials; Geometrical Problems.

No. 86. Mechanical Drawing, Part II. —Projection.

No. 87. Mechanical Drawing, Part III. —Machine Details.

No. 88. Mechanical Drawing, Part IV. —Machine Details.

No. 89. The Theory of Shrinkage and Forced Fits.

No. 90. Railway Repair Shop Practice.

No. 91. Operation of Machine Tools.—The Lathe, Part I.

No. 92. Operation of Machine Tools.—The Lathe, Part II.

No. 93. Operation of Machine Tools.—Planer, Shaper, Slotter.

No. 94. Operation of Machine Tools.—Drilling Machines.

No. 95. Operation of Machine Tools.—Boring Machines.

No. 96. Operation of Machine Tools.—Milling Machines, Part I.

No. 97. Operation of Machine Tools.—Milling Machines, Part II.

No. 98. Operation of Machine Tools.—Grinding Machines.

No. 99. Automatic Screw Machine Practice, Part I.—Operation of the Brown & Sharpe Automatic Screw Machine.

No. 100. Automatic Screw Machine Practice, Part II.—Designing and Cutting Cams for the Automatic Screw Machine.

No. 101. Automatic Screw Machine Practice, Part III.—Circular Forming and Cut-off Tools.

No. 102. Automatic Screw Machine Practice, Part IV.—External Cutting Tools.

No. 103. Automatic Screw Machine Practice, Part V—Internal Cutting Tools.

No. 104. Automatic Screw Machine Practice, Part VI.—Threading Operations.

No. 105. Automatic Screw Machine Practice. Part VII.—Knurling Operations.

No. 106. Automatic Screw Machine Practice, Part VIII.—Cross Drilling, Burring and Slotting Operations.

ADDITIONAL TITLES WILL BE ANNOUNCED IN MACHINERY FROM TIME TO TIME

MACHINERY'S DATA SHEET SERIES

MACHINERY'S Data Sheet Books include the well-known series of Data Sheets originated by MACHINERY, and issued monthly as supplements to the publication; of these Data Sheets over 500 have been published, and 6,000,000 copies sold. Revised and greatly amplified, they are now presented in book form, kindred subjects being grouped together. The purchaser may secure either the books on those subjects in which he is specially interested, or, if he pleases, the whole set at one time. The price of each book is 25 cents (one shilling) delivered anywhere in the world.

CONTENTS OF DATA SHEET BOOKS

No. 1. Screw Threads.—United States, Whitworth, Sharp V- and British Association Standard Threads; Briggs Pipe Thread; Oil Well Casing Gages; Fire Hose Connections; Acme Thread; Worm Threads; Metric Threads; Machine, Wood, and Lag Screw Threads; Carriage Bolt Threads, etc.

No. 2. Screws, Bolts and Nuts.—Fillister-head, Square-head, Headless, Collar-head and Hexagon-head Screws; Standard and Special Nuts; T-nuts, T-bolts and Washers; Thumb Screws and Nuts; A. L. A. M. Standard Screws and Nuts; Machine Screw Heads; Wood Screws; Tap Drills; Lock Nuts; Eye-bolts, etc.

No. 3. Taps and Dies.—Hand, Machine, Tapper and Machine Screw Taps; Taper Die Taps; Sellers Hobs; Screw Machine Taps; Straight and Taper Boiler Taps; Stay-bolt, Washout, and Patch-bolt Taps; Pipe Taps and Hobs; Solid Square, Round Adjustable and Spring Screw Threading Dies.

No. 4. Reamers, Sockets, Drills and Milling Cutters.—Hand Reamers; Shell Reamers and Arbors; Pipe Reamers; Taper Pins and Reamers; Brown & Sharpe, Morse and Jarno Taper Sockets and Reamers; Drills; Wire Gages; Milling Cutters; Setting Angles for Milling Teeth in End Mills and Angular Cutters, etc..

No. 5. Spur Gearing.—Diametral and Circular Pitch; Dimensions of Spur Gears; Tables of Pitch Diameters; Odontograph Tables; Rolling Mill Gearing; Strength of Spur Gears; Horsepower Transmitted by Cast-iron and Rawhide Pinions; Design of Spur Gears; Weight of Cast-iron Gears; Epicyclic Gearing.

No. 6. Bevel, Spiral and Worm Gearing.—Rules and Formulas for Bevel Gears; Strength of Bevel Gears; Design of Bevel Gears; Rules and Formulas for Spiral Gearing; Tables Facilitating Calculations; Diagram for Cutters for Spiral Gears; Rules and Formulas for Worm Gearing, etc.

No. 7. Shafting, Keys and Keyways.—Horsepower of Shafting; Diagrams and Tables for the Strength of Shafting; Forcing, Driving, Shrinking and Running Fits; Woodruff Keys; United States Navy Standard Keys; Gib Keys; Milling Keyways; Duplex Keys.

No. 8. Bearings, Couplings, Clutches, Crane Chain and Hooks.—Pillow Blocks; Babbitted Bearings; Ball and Roller Bearings; Clamp Couplings; Plate Couplings; Flange Couplings; Tooth Clutches; Crab Couplings; Cone Clutches; Universal Joints; Crane Chain; Chain Friction; Crane Hooks; Drum Scores.

No. 9. Springs, Slides and Machine Details.—Formulas and Tables for Spring Calculations; Machine Slides; Machine Handles and Levers; Collars; Hand Wheels; Pins and Cotters; Turn-buckles, etc.

No. 10. Motor Drive, Speeds and Feeds, Change Gearing, and Boring Bars.—Power required for Machine Tools; Cutting Speeds and Feeds for Carbon and High-speed Steel; Screw Machine Speeds and Feeds; Heat Treatment of High-speed Steel Tools; Taper Turning; Change Gearing for the Lathe; Boring Bars and Tools, etc.

No. 11. Milling Machine Indexing, Clamping Devices and Planer Jacks.—Tables for Milling Machine Indexing; Change Gears for Milling Spirals; Angles for setting Indexing Head when Milling Clutches; Jig Clamping Devices; Straps and Clamps; Planer Jacks.

No. 12. Pipe and Pipe Fittings.—Pipe Threads and Gages; Cast-iron Fittings; Bronze Fittings; Pipe Flanges; Pipe Bends; Pipe Clamps and Hangers; Dimensions of Pipe for Various Services, etc.

No. 13. Boilers and Chimneys.—Flue Spacing and Bracing for Boilers; Strength of Boiler Joints; Riveting; Boiler Setting; Chimneys.

No. 14. Locomotive and Railway Data.—Locomotive Boilers; Bearing Pressures for Locomotive Journals; Locomotive Classifications; Rail Sections; Frogs, Switches and Cross-overs; Tires; Tractive Force; Inertia of Trains; Brake Levers; Brake Rods, etc.

No. 15. Steam and Gas Engines.—Saturated Steam; Steam Pipe Sizes; Steam Engine Design; Volume of Cylinders; Stuffing Boxes; Setting Corliss Engine Valve Gears; Condenser and Air Pump Data; Horsepower of Gasoline Engines; Automobile Engine Crankshafts, etc.

No. 16. Mathematical Tables.—Squares of Mixed Numbers; Functions of Fractions; Circumference and Diameters of Circles; Tables for Spacing off Circles; Solution of Triangles; Formulas for Solving Regular Polygons; Geometrical Progression, etc.

No. 17. Mechanics and Strength of Materials.—Work; Energy; Centrifugal Force; Center of Gravity; Motion; Friction; Pendulum; Falling Bodies; Strength of Materials; Strength of Flat Plates; Ratio of Outside and Inside Radii of Thick Cylinders, etc.

No. 18. Beam Formulas and Structural Design.—Beam Formulas; Sectional Moduli of Structural Shapes; Beam Charts; Net Areas of Structural Angles; Rivet Spacing; Splices for Channels and I-beams; Stresses in Roof Trusses, etc.

No. 19. Belt, Rope and Chain Drives.—Dimensions of Pulleys; Weights of Pulleys; Horsepower of Belting; Belt Velocity; Angular Belt Drives; Horsepower transmitted by Ropes; Sheaves for Rope Drive; Bending Stresses in Wire Ropes; Sprockets for Link Chains; Formulas and Tables for Various Classes of Driving Chain.

No. 20. Wiring Diagrams, Heating and Ventilation, and Miscellaneous Tables.—Typical Motor Wiring Diagrams; Resistance of Round Copper Wire; Rubber Covered Cables; Current Densities for Various Contacts and Materials; Centrifugal Fan and Blower Capacities; Hot Water Main Capacities; Miscellaneous Tables: Decimal Equivalents, Metric Conversion Tables, Weights and Specific Gravity of Metals, Weights of Fillets, Drafting-room Conventions, etc.

MACHINERY, the monthly mechanical journal, originator of the Reference and Data Sheet Series, is published in three editions—the *Shop Edition*, $1.00 a year; the *Engineering Edition*, $2.00 a year, and the *Foreign Edition*, $3.00 a year.

The Industrial Press, Publishers of MACHINERY,

)-55 Lafayette Street, New York City, U. S. A.

MACHINERY'S REFERENCE SERIES

EACH PAMPHLET IS ONE UNIT IN A COMPLETE LIBRARY OF MACHINE DESIGN AND SHOP PRACTICE REVISED AND REPUBLISHED FROM MACHINERY

No. 12

MATHEMATICS OF MACHINE DESIGN

WITH SPECIAL REFERENCE TO SHAFTING AND EFFICIENCY OF HOISTING MACHINERY

By C. F. Blake

SECOND EDITION

CONTENTS

Machinery Shafting - - - - - - - - 3
Efficiency of Mechanism - - - - - - - 19

Copyright 1910, The Industrial Press, Publishers of MACHINERY,
49-55 Lafayette Street, New York City

Digitized by Google

MACHINERY'S REFERENCE SERIES

This treatise is one unit in a comprehensive Series of Reference books, originated by MACHINERY, and including an indefinite number of compact units, each covering one subject thoroughly. The whole series comprises a complete working library of mechanical literature in which the Mechanical Engineer, the Master Mechanic, the Designer, the Machinist and Tool-maker will find the special information he wishes to secure, selected, carefully revised and condensed for him. The books are sold singly or in complete sets, as may be desired. The price of each book is 25 cents, and it is possible to secure them on even more favorable terms under special offers issued by MACHINERY'S circulation department and sent to any one on request.

The success of the Reference Series was instantaneous and copies are now widely distributed in machine shops and metal working plants everywhere.

CONTENTS OF REFERENCE BOOKS

No. 1. WORM GEARING.—Calculating Dimensions for Worm Gearing; Hobs for Worm-Gears; Location of Pitch Circle; Self-Locking Worm Gearing; etc.

No. 2. DRAFTING-ROOM PRACTICE.—Drafting-Room System; Tracing, Lettering and Mounting; Card Index Systems.

No. 3. DRILL JIGS.—Elementary Principles of Drill Jigs; Drilling Jig Plates; Examples of Drill Jigs; Jig Bushings; Using Jigs to Best Advantage.

No. 4. MILLING FIXTURES.—Elementary Principles of Milling Fixtures; Collection of Examples of Milling Fixture Design, from practice.

No. 5. FIRST PRINCIPLES OF THEORETICAL MECHANICS.

No. 6. PUNCH AND DIE WORK.—Principles of Punch and Die Work; Suggestions for the Making and Use of Dies; Examples of Die and Punch Design.

No. 7. LATHE AND PLANER TOOLS.—Cutting Tools for Planer and Lathe; Boring Tools; Shape of Standard Shop Tools; Forming Tools.

No. 8. WORKING DRAWINGS AND DRAFTING-ROOM KINKS.

No. 9. DESIGNING AND CUTTING CAMS.—Drafting of Cams; Cam Curves; Cam Design and Cam Cutting; Suggestions in Cam Making.

No. 10. EXAMPLES OF MACHINE SHOP PRACTICE.—Cutting Bevel Gears with Rotary Cutters; Making a Worm-Gear; Spindle Construction.

No. 11. BEARINGS.—Design of Bearings; Causes of Hot Bearings; Alloys for Bearings; Ball Bearings; Friction of Roller Bearings.

No. 12. MATHEMATICS OF MACHINE DESIGN.—Compiled with special reference to shafting and efficiency of hoisting machinery.

No. 13. BLANKING DIES.—Making Blanking Dies; Blanking and Piercing Dies; Construction of Split Dies; Novel Ideas in Die Making.

No. 14. DETAILS OF MACHINE TOOL DESIGN.—Cone Pulleys and Belts; Strength of Countershafts; Tumbler Gear Design; Faults of Iron Castings.

No. 15. SPUR GEARING.—First Principles of Gearing; Formulas for Spur Gearing; Design and Calculation of Gear Wheels; Strength of Gear Teeth.

No. 16. MACHINE TOOL DRIVES.—Speeds and Feeds of Machine Tools; Geared or Single Pulley Drives; Drives for High Speed Cutting Tools.

No. 17. STRENGTH OF CYLINDERS.—Formulas, Charts, and Diagrams for Thick Hollow Cylinders; Design of Thick Cylinders; Cast Iron Cylinders.

No. 18. SHOP ARITHMETIC FOR THE MACHINIST.—Tapers; Change Gears; Cutting Speeds; Feeds; Indexing; Gearing for Cutting Spirals; Angles.

No. 19. USE OF FORMULAS IN MECHANICS.—Mathematical Signs and Formulas; Strength of Materials; Graphical Methods; Levers; Center of Gravity.

No. 20. SPIRAL GEARING.—Calculating Spiral Gears; Rules, Formulas, and Diagrams for Designing Spiral Gears; Efficiency of Spiral Gearing, etc.

See inside back cover for additional titles

MACHINERY'S REFERENCE SERIES

EACH NUMBER IS ONE UNIT IN A COMPLETE LIBRARY OF MACHINE DESIGN AND SHOP PRACTICE REVISED AND REPUBLISHED FROM MACHINERY

NUMBER 12

MATHEMATICS OF MACHINE DESIGN

WITH SPECIAL REFERENCE TO SHAFTING AND EFFICIENCY OF HOISTING MACHINERY

By C. F. BLAKE

SECOND EDITION

CONTENTS

Machinery Shafting - - - - - - - - - 3
Efficiency of Mechanism - - - - - - - - 19

Copyright, 1910, The Industrial Press, Publishers of MACHINERY
49-55 Lafayette Street, New York City

CHAPTER I

MACHINERY SHAFTING*

At first thought it seems as if a chapter upon this subject should be prefaced with an apology. Undoubtedly shafting has been the subject of as much discussion as anything mechanical, and the rules laid down for mill shafting are so well founded as to be available under all circumstances, and so widely known as to require no discussion. When it comes to machinery shafts, however, we have the ordinary rules for twisting and bending moments, and for the two combined, but we often find complicated combinations of loading needing investigation, and we find little or nothing in the text books about the present practice followed in fitting up machinery shafting.

In discussing the subject let us first take up briefly the three general principles governing shafting; simple twisting moments, simple bending moments, and combined twisting and bending moments.

When there is no bending moment the shaft may be designed for a simple twisting moment, and we have:

$$T = \frac{\pi}{16} d^3 f; \; d = \sqrt[3]{\frac{T}{0.196 f}} \qquad (1)$$

in which T = the twisting moment in inch-pounds,
d = the diameter of the shaft,
f = the fiber stress in pounds per square inch.

Table I gives the value of $\frac{\pi}{16} d^3$ for different diameters of shaft, and

$\frac{T}{f}$ = constant in table.

Example: A shaft is to sustain a twisting moment of 120,000 inch-pounds, the fiber stress being 16,000 pounds per square inch. Required, the diameter of the shaft.

$$\frac{120{,}000}{16{,}000} = 7.5.$$

The nearest constant in the table, *above* 7.5 is 7.55, the diameter corresponding to which is 3⅜ inches, which is the diameter of the required shaft.

A form of shafting frequently found in machinery is the stationary shaft, upon which certain heavy parts revolve, the shaft remaining stationary in the bearings, while the revolving pieces are usually brass bushed. Such shafts are often called pins, and being required to transmit no twisting moment, may be proportioned for a simple

* MACHINERY, March and April, 1904.

Table I. Values of $\frac{T}{f} = \frac{\pi}{16} d^3$

d	0	1/16	1/8	3/16	1/4	5/16	3/8	7/16	1/2	9/16	5/8	11/16	3/4	13/16	7/8	15/16	d
1	.196	.237	.279	.331	.383	.446	.510	.586	.663	.752	.842	.945	1.05	1.18	1.29	1.43	1
2	1.57	1.72	1.88	2.05	2.23	2.44	2.63	2.85	3.07	3.31	3.55	3.81	4.08	4.37	4.66	4.98	2
3	5.30	5.63	5.99	6.36	6.74	7.14	7.55	7.98	8.42	8.88	9.35	9.80	10.35	10.88	11.42	11.99	3
4	12.57	13.17	13.78	14.42	15.07	15.70	16.44	17.66	17.89	18.66	19.43	20.23	21.04	21.89	22.75	23.64	4
5	24.54	25.48	26.43	27.42	28 41	29.45	30.49	31.58	32.67	34.76	34.95	36.14	37.33	38.57	39.82	41.11	5
6	42.41	43.76	45.12	46.53	47.94	49.40	50.87	52.39	53.92	55.50	57.09	58.74	60 39	62.09	63.80	65.57	6
7	67.35	69.18	71.02	72.92	74.82	76.79	78.76	80.79	82.83	84.94	87.05	89.22	91.40	93.64	95.89	98.19	7

Table II. Values of $\frac{d^3}{10}$

d	0	1/16	1/8	3/16	1/4	5/16	3/8	7/16	1/2	9/16	5/8	11/16	3/4	13/16	7/8	15/16	d
1	0.1	.119	.142	.167	.195	.222	.259	.297	.337	.381	.429	.480	.536	.595	.659	.745	1
2	0.8	.874	.959	1.04	1.14	1.23	1.34	1.45	1.56	1.68	1.80	1.94	2.08	2.22	2.37	2.57	2
3	2.7	2.86	3.05	3.24	3.43	3.63	3 84	4.06	4.28	4.52	4.76	5 01	5.27	5.54	5.12	6.17	3
4	6.4	6.69	7.02	7.34	7.67	8.02	8.37	8.73	9.11	9 49	9.89	11.29	10.72	11.14	11.58	12.15	4
5	12.5	12.95	13.46	13.95	14.47	14.98	15.53	16.07	16.63	17.20	17 79	18.39	19.01	19.63	20.27	21.09	5
6	21.6	22.25	22.97	23.68	24.41	25.14	25.91	26.67	27.46	28.25	29 07	29.90	30.75	31.61	32.49	33.61	6
7	34.3	35.19	36.17	37.12	38.1	39.09	40.11	41.13	42.18	43.24	44.33	45.42	46.55	47.67	48.84	50.30	7

Table III. Values of h for Various Values of $\frac{R^2}{r+a}$ and n.

$\frac{R^2}{r+a}$	Values of n.					$\frac{R^2}{r+a}$	Values of n.				
	1	2	3	4	5		1	2	3	4	5
20	0.000001	0.000004	0.000009	0.000016	0.000025	100	0.000005	0.00002	0.000045	0.000082	0.000125
30	0.0000015	0.000006	0.0000135	0.000024	0.0000375	110	0.0000055	0.000022	0.0000495	0.00009	0.0001875
40	0.000002	0.000008	0.000018	0.000032	0.00005	120	0.000006	0.000024	0.000054	0.000097	0.00015
50	0.0000025	0.00001	0.0000225	0.00004	0.0000625	130	0.0000065	0.000026	0.0000585	0.000105	0.0001625
60	0.000003	0.000012	0.000027	0.000048	0.000075	140	0.0000070	0.000028	0.000068	0.000113	0.000175
70	0.0000035	0.000014	0.0000315	0.000056	0.0000875	150	0.0000075	0.00003	0.0000675	0.000121	0.0001875
80	0.000004	0.000016	0.000036	0.000064	0.0001	160	0.0000080	0.000032	0.000072	0.000129	0.000200
90	0.0000045	0.000018	0.0000405	0.000078	0.000112	170	0.0000085	0.000034	0.0000765	0.000137	0.0002125

bending moment. Equating the bending moment to the moment of resistance for a round section we have,

$$M = \frac{\pi}{32} d^3 f = 0.098\, d^3 f; \qquad \frac{M}{f} = \frac{d^3}{10} \text{ very nearly,}$$

Table II gives values of $\frac{d^3}{10}$ for various diameters of shafts.

Example: A pin is to take a bending moment of 65,000 inch-pounds at 16,000 pounds per square inch fiber stress. Required, diameter of the pin.

$$\frac{65{,}000}{16{,}000} = 4.06.$$

The nearest constant to 4.06 in the table is 4.06, the corresponding diameter being 3 7/16 inches.

Table IV. Values of n for Various Values of k

k	n	k	n	k	n
.1	1.03	1.1	1.37	2.1	1.64
.2	1.06	1.2	1.40	2.2	1.66
.3	1.10	1.3	1.43	2.3	1.68
.4	1.13	1.4	1.46	2.4	1.71
.5	1.17	1.5	1.48	2.5	1.73
.6	1.20	1.6	1.51	2.6	1.75
.7	1.24	1.7	1.54	2.7	1.77
.8	1 27	1.8	1.56	2.8	1.79
.9	1.30	1.9	1.59	2.9	1.81
1.0	1 34	2.0	1.61	3.0	1.83

When a revolving shaft through which power is transmitted, carries gears, drums or other devices, it is subject to both bending and twisting moments, and a calculation by either of the previous tables ignoring the other will result in a weak shaft. We may, however, substitute for the simple twisting moment T a greater twisting moment T_e, which will be the equivalent of the combined twisting moment T. and bending moment M.

This equivalent twisting moment is

$$T_e = M + \sqrt{M^2 + T^2} \text{ *}$$

The diameter of shaft suitable for the combined moments T and M. may be found by substituting T_e for T in equation (1). This formula may be more conveniently used in the following form: Letting the ratio

$$\frac{M}{T} = k, \text{ and } D = nd,$$

where D = the diameter of shaft for combined moments T and M. d = the diameter of shaft for simple twisting moment T, and

$$n = \sqrt[3]{k + \sqrt{k^2 + 1}} = \sqrt[3]{1.83\, k + 0.83}, \text{ approximately.}$$

* This formula used by the author gives a considerably larger value to the combined twisting and bending moments than the formulas commonly used. It gives, in effect, a larger factor of safety.

Table IV gives values of n for various values of k.

Example: Suppose the shafts of the two previous examples are one, that is, a shaft subjected to a twisting moment of 120,000 inch-pounds, and a bending moment of 65,000 inch-pounds. Required, the diameter of the shaft, with the fiber stress at 16,000 pounds per square inch as before.

$$k = \frac{65{,}000}{120{,}000} = 0.54.$$

The nearest corresponding value of n is 1.17.

The diameter d for a twisting moment of 120,000 inch-pounds found in the first example is 3⅜ inches.

$D = 3.375 \times 1.17 = 3.94$ inches, say a 4-inch shaft.

A comparison of the three examples will show the importance of considering both the bending and twisting moments upon any shaft that is subject to both actions.

Gears, drums and other detail parts are so distributed upon shafting

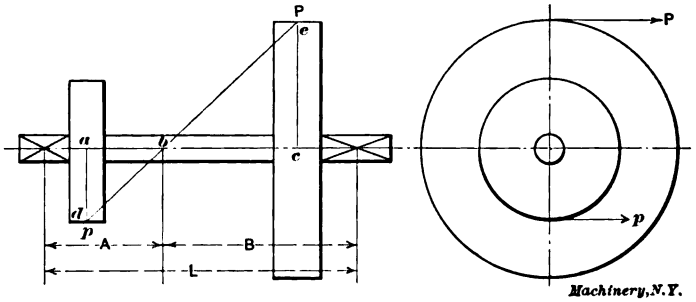

Fig. 1

as to cause combined strains, and the maximum fiber stress resulting therefrom must be determined. A simple case is that of two gears between bearings, Fig. 1, the large and small gear respectively carrying loads P and p, the loads acting in the same direction. Connect P and p by a line cutting the axis at b.

Since the shaft must be in equilibrium, we have $p \times da = P \times ec$, and

$$\frac{p}{P} = \frac{ec}{da}$$

By the law of similar triangles,

$$\frac{ec}{da} = \frac{eb}{bd}$$

and substituting we have,

$$\frac{p}{P} = \frac{eb}{bd}$$

and, consequently, $p \times bd = P \times eb$.

The reaction at b is then $p + P = W$.

and the bending moment is $M = \frac{WAB}{L}$.

The torsional moment is,

$$T = p \times ad.$$

$$k = \frac{M}{T} = \frac{W\,A\,B}{L \times p \times a\,d} = \frac{(p+P)\,A\,B}{L \times p \times a\,d}$$

Another case of combined strains is shown in Figs. 2 and 3, where Fig. 2 shows an elevation, and Fig. 3, diagrammatical end views. In

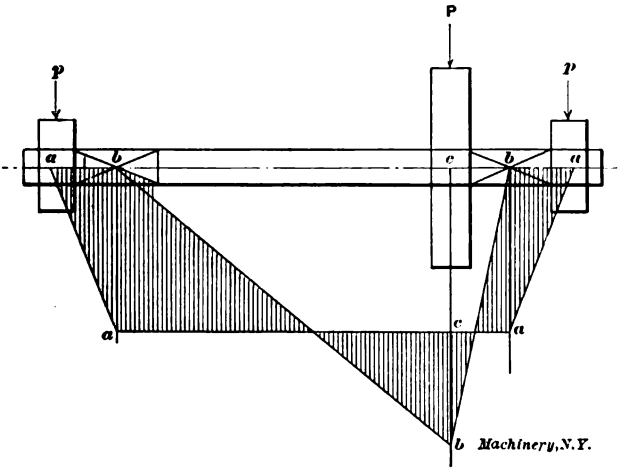

Fig. 2

this example a gear under load P drives two pinions each under load p. First consider case A where all loads are in the same direction. Draw the bending moment diagram b-b-b for load P, also the diagram

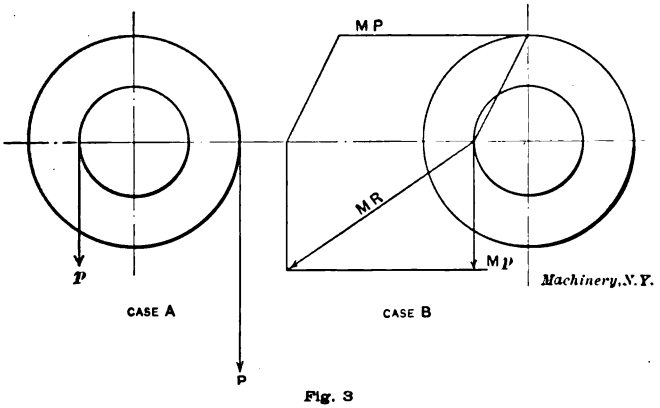

Fig. 3

a-a-a-a for loads p. It is obvious, since the loads are on opposite sides of the bearing, that the bending moments will oppose each other, and the shaded portion of the diagram represents the algebraic sum of the two moment diagrams. Any ordinate of the shaded portion is the bending moment of the corresponding point of the shaft.

In case B the loads are not in the same direction. To find the moment at any given point on the shaft it is necessary to lay off separately, in the direction of each force, the bending moment ordinate for that force, as $MP = eb$, and $Mp = ba$. and take the resultant MR as the bending moment at the given point. This method may be extended to all forms of loading, as illustrated in the following examples:

Example: A shaft, Fig. 4, carrying a gear loaded to 2,140 pounds tooth load drives two pinions, each under 1,925 pounds tooth load. Required, the size of the shaft suitable for the given dimensions, the fiber stress being 9,000 pounds per square inch.

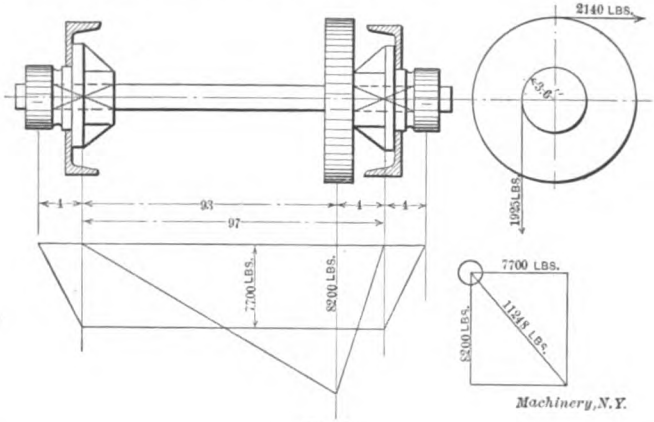

Fig. 4

$T = 1{,}925 \times 3.6 = 6{,}930$ inch-pounds,

$Mp = 1{,}925 \times 4 = 7{,}700$ inch-pounds,

$$MP = \frac{2{,}140 \times 93 \times 4}{97} = 8{,}200 \text{ inch-pounds},$$

$MR = 11{,}248$ inch-pounds.

$$k = \frac{MR}{T} = \frac{11{,}248}{6{,}930} = 1.6,$$ the corresponding value of n being 1.51.

$$\frac{T}{f} = \frac{6{,}930}{9{,}000} = 0.77$$

From Table I, of values for twisting moments, we find the nearest constant above 0.77 is 0.842 for a 1⅝-inch shaft. Then $1.625 \times 1.51 = 2.45$ inches for the required diameter of the shaft.

In all such cases as the above example, in which a shaft is supported upon channels or other unsymmetrical supports, the bending moment must be calculated to the center of gravity of the supporting member.

Example: In Fig. 5 we have a drum shaft of given dimensions and following conditions: Drum loose on shaft and bushed; weight of drum 500 pounds; two ropes leading from drum, each under 3,750

pounds load; weight of gear, 250 pounds; tooth load on drum gear horizontal; rope loads vertical; fiber stress to be 10,000 pounds per square inch. Resolving all loads to the heavier loaded journal we have:

$$\frac{6{,}226 \times 24}{30} = 4{,}980 \text{ pounds horizontal load,}$$

$$\frac{3{,}750 \times 17}{30} = 2{,}125 \text{ pounds, rope } c,$$

$$\frac{3{,}750 \times 4}{30} = 500 \text{ pounds, rope } d,$$

$$\frac{250 \times 24}{30} = 200 \text{ pounds, weight of gear,}$$

$$\frac{500}{2} = 250 \text{ pounds, weight of drum,}$$

Total = 3,075 pounds vertical load.

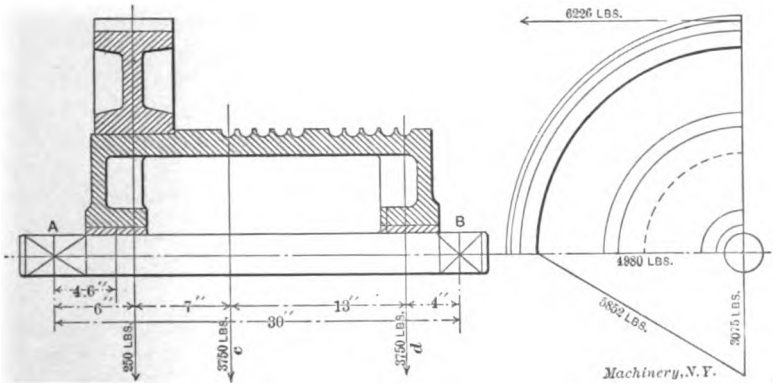

Fig. 5

The resultant of the horizontal and vertical loads on A is 5,852 pounds. Then $M = 5{,}852 \times 4.6 = 26{,}919$ inch-pounds.

$$\frac{M}{f} = \frac{26{,}919}{10{,}000} = 2.69$$

In Table II, of values from simple bending moments, the nearest constant is 2.7 for a 3-inch shaft.

Fig. 6 shows a common arrangement of drum and gear, in which a is the center of gravity of the rope loads P. Where there are two ropes on the drum, the position of a is constant, while for one rope the position of a varies along the drum, and for the latter case several solutions should be made with varying positions of a. The load is supported upon three points, the journals A and B and the gear teeth at C. The load P puts a downward load upon each journal A and B, and is divided proportionally between them. In the figure a is central, so

the loads upon A and B are equal, and are $P/2$; the upward load p at C is divided proportionally between A and B; thus we have:

$$\left.\begin{aligned}\text{Load at } A &= \frac{C\,m}{L}\\ \text{Load at } B &= \frac{C\,n}{L}\end{aligned}\right\}\ \text{upward loads.}$$

$$\text{Loads at } A \text{ and } B = \frac{P}{2},\ \text{downward loads.}$$

The algebraic sum of the two loads upon both journals gives the amount and direction of the resultant load on the journal. Draw BC, and produce Ca to cut AB at d. We thus represent the load P as

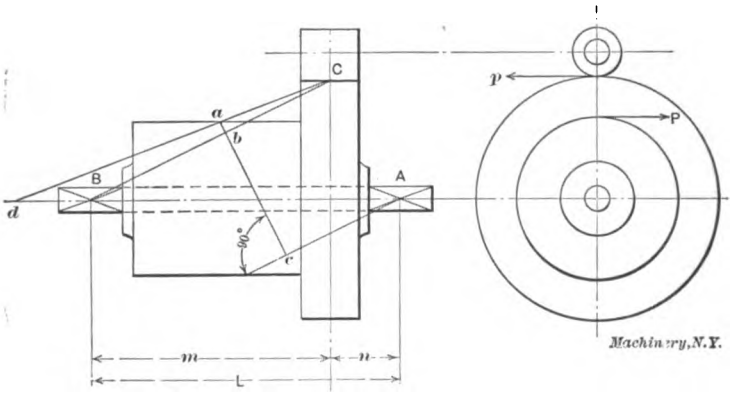

Fig. 6

eccentrically supported upon a beam BC, at an arm ab, and prevented from rotating about BC as an axis by the reaction of journal A acting at an arm bc. We thus have

$$\text{Load at } A = \frac{P \times a\,b}{b\,c} = W,\ \text{upward load.}$$

$$\left.\begin{aligned}\text{Load at } C &= \frac{(P+W)\,B\,b}{B\,C}\\ \text{Load at } B &= \frac{(P+W)\,C\,b}{B\,C}\end{aligned}\right\}\ \text{downward loads.}$$

The condition of loading at journal A is seen from the position of point d, which, lying beyond B as in the figure, indicates an upward load at A, lying on B indicates no load at A, and lying between A and B indicates a downward load at A, the weight of the drum and gear being neglected.

Fig. 7 shows the same arrangement with the pinion on the opposite side from a, and this case is analogous to that shown in Fig. 1.

A shaft requiring special investigation in certain classes of machines, as cranes, turntables and other revolving machines; is that effecting the slewing or turning in a horizontal plane. Fig. 8 represents the diagram of a common slewing mechanism for a crane, in which

A = the center pin, column or mast,

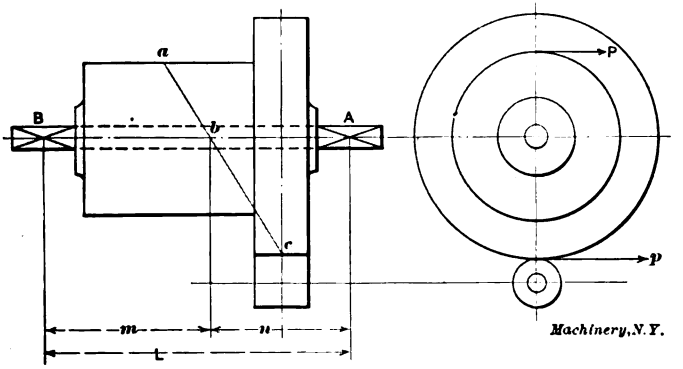

Fig. 7

B = a large circular rack, concentric with A.

C = a pinion mounted upon a vertical shaft, and meshing with the rack B.

W = the load in pounds,

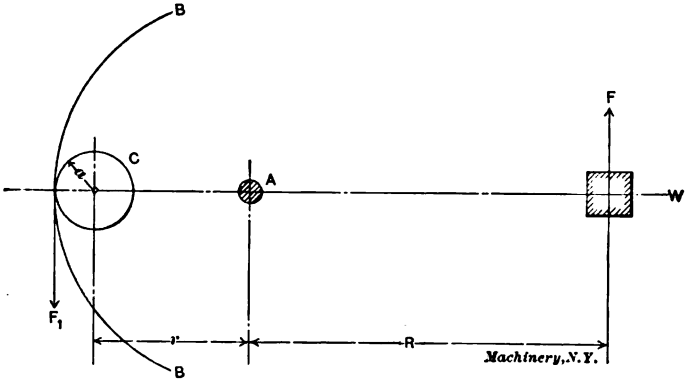

Fig. 8

R = the radius of the boom in feet,

r = the radius of the circle described by the slewing shaft,

a = the radius of the pinion C,

n = the number of revolutions per minute of the crane,

V = the velocity of the load W in feet per second = $\frac{2\pi R n}{60}$,

$V^2 = 0.01\,R^2\,n^2$,
S = space in feet in which full velocity is to be obtained,
F = force in pounds acquired by the load W,
F_1 = force in pounds on the slewing shaft,
g = acceleration = 32.2.

$$\text{Energy} = \frac{W\,V^2}{2\,g} = F\,S$$

Then,

$$F = \frac{W\,V^2}{2\,g\,S} = \frac{W\,V^2}{64.4\,S} \qquad (2)$$

Assuming S = one-quarter of a turn, $= \frac{2\,\pi\,R}{4} = 1.57\,R$, and substituting the values of S and V^2 in (2) we have,

$$F = 0.0001\,R\,W\,n^2$$

Now

$$F_1 = \frac{F\,R}{r+a} = \frac{0.0001\,R^2\,W\,n^2}{r+a}.$$

The twisting moment on the slewing shaft then is

$$T = F_1\,a = \frac{0.0001\,R^2\,W\,n^2\,a}{r+a} \qquad (3)$$

Substituting in (3) the value $\frac{\pi}{16}\,d^3\,f$ for T, and assuming $f = 10{,}000$ pounds per square inch, we have

$$\frac{\pi}{16}\,d^3\,f = \frac{0.0001\,R^2\,W\,n^2\,a}{r+a}$$

$$d^3 = \frac{0.00000005\,R^2\,W\,n^2\,a}{r+a}$$

$$d = \sqrt[3]{0.00000005\,\frac{R^2\,n^2}{r+a}\,W\,a}$$

If we assume $0.00000005\,\frac{R^2\,n^2}{r+a} = h$, we may write the last formula

$$d = \sqrt[3]{h\,W\,a} \qquad (4)$$

Table III gives values of h for various values of the ratio $\frac{R^2}{r+a}$ and n, assuming $f = 10{,}000$ pounds per square inch. For $f = 12{,}000$, multiply the values by 0.833, and for $f = 16{,}000$, multiply by 0.625.

The pinion C may be either overhung, or mounted between bearings, as shown respectively in Fig. 9 and Fig. 10. The values of k are as follows:

Overhung Shaft, Fig. 9

The bending moment

$$M = F_1 L = \frac{0.0001\, R^2\, W\, n^2\, L}{r + a}$$

and the twisting moment

$$T = \frac{0.0001\, R^2\, W\, n^2\, a}{r + a}$$

and

$$k = \frac{M}{T} = \frac{L}{a}$$

Shaft between Bearings, Fig. 10

The bending moment

$$M = \frac{F_1 L}{2} = \frac{0.0001\, R^2\, W\, n^2\, L}{2\,(r + a)}$$

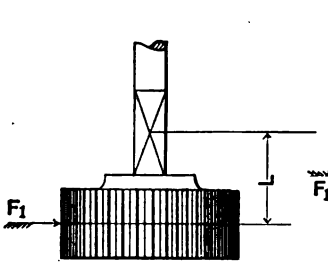

Fig. 9

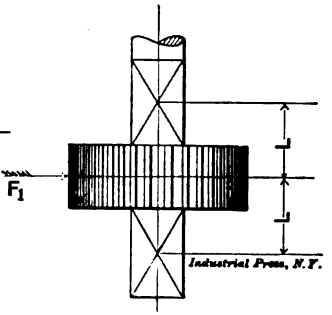

Fig. 10

and the twisting moment

$$T = \frac{0.0001\, R^2\, W\, n^2\, a}{r + a}$$

and

$$k = \frac{M}{T} = \frac{L}{2a}$$

In taking the values of W and R, not only the load and the radius of the boom must be considered, but also the weight and radius of such heavy parts of the machinery as may revolve with the crane, in each case resolving the turning moment of such parts about the center pin or mast, to the radius R.

Example: Fig. 11 represents a steam crane, the letters corresponding to those of Fig. 8, while the dimensions and weights given are those of a particular crane having a capacity of ten tons at a radius of sixteen feet, the pinion C meshing into an internal spur rack in the foundation and being driven by bevel gears as shown. Required, the diameter of the vertical shaft, f being 12,000 pounds per square inch.

The load at 16 feet radius = ... 20,000 pounds
The block at 16 feet radius = ... 435 "
The jib weighs 3,000 pounds, its center of gravity being at a radius of 11½ feet, resolved to a radius of 16 feet $= \frac{3{,}000 \times 11.5}{16} =$ ..... 2,156 "
The boiler and extension weigh 11,855 pounds at a center of gravity radius of 8½ feet, resolved to a radius of 16 feet $= \frac{11{,}855 \times 8.5}{16} =$ ..... 6,297 "
The machinery and side frames weigh 21,800 pounds, at a radius of 2 feet, resolved to a radius of 16 feet $= \frac{21{,}800 \times 2}{16} =$ ..... 2,725 "

Total load assumed at a radius of 16 feet = ... 31,613 pounds

$R = 16$ feet, $r = 2$ feet, and $a = 9$ inches; consequently,

$$\frac{R^2}{r+a} = \frac{16^2}{2+\frac{3}{4}} = 93.$$

Opposite 90 and under $n = 3$ in Table III, 3 being the required revolutions per minute of the crane in question, the value of h is 0.0000405, and for 93 the value of h would consequently be about 0.000042, and since the stress per square inch is 12,000 pounds, we have

$$h = 0.000042 \times 0.833 = 0.000035.$$

From (4) we have

$$d = \sqrt[3]{0.000035 \times 31{,}613 \times 9} = 2.15 \text{ inches diameter,}$$

for twisting only.

The pinion being mounted between bearings, and $L = 6$ inches, we have

$$k = \frac{6}{18} = 0.33$$

Corresponding to this value of k we find the nearest value of $n = 1.10$ in Table IV. Then

$d = 2.15 \times 1.1 = 2\frac{3}{8}$ inches, approximately = diameter of shaft required.

When calculating the size of shafting, the first thing of importance to determine is the length of the journal, and once established, all bending moments should be taken to the center of the journal. Given the diameter, the length of the journal depends upon three conditions: Bearing area, character of lubricant, and ability to carry off heat. Grease has become a most widely used lubricant for heavy machinery, possessing as it does sufficient body to enable the designer to use higher bearing values than with other lubricants without squeezing the lubricant from the bearing. It has been found in practice that to limit the surface speed to 350 feet per minute, and the bearing value to 80 pounds per square inch of projected area, produces, with grease

as a lubricant, a very satisfactory bearing, well within the limits of good performance as regards heating.

Let d = the diameter of the shaft,

l = the length of the journal,

a = the projected area, $= d \times l$,

W = total pounds pressure on journal,

R.P.M. = revolutions per minute of the shaft,

Then the pressure per square inch is,

$$\frac{W}{a} = \frac{W}{d \times l} = 80 \text{ pounds}; \qquad d = \frac{W}{80\,l};$$

The surface speed, in feet, is,

$$\frac{\pi d \times \text{R.P.M.}}{12} = 350; \qquad d = \frac{12 \times 350}{\pi \times \text{R.P.M.}} = \frac{1337}{\text{R.P.M.}}$$

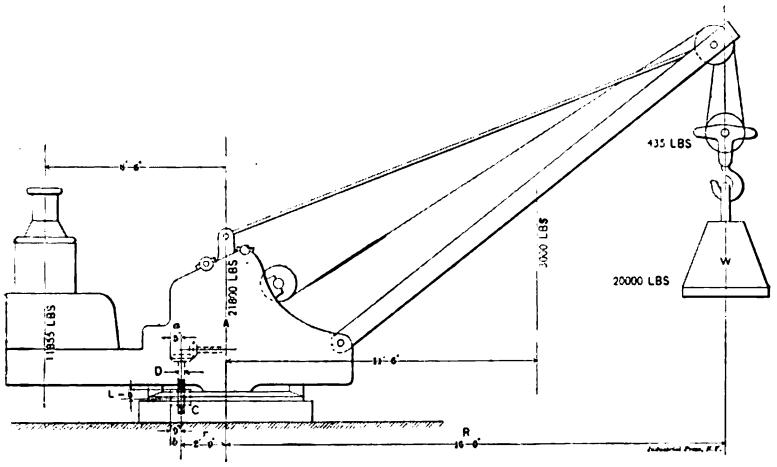

Fig. 11

Equating these two values of d we have,

$$\frac{W}{80\,l} = \frac{1337}{\text{R.P.M.}}; \qquad l = \frac{W \times \text{R.P.M.}}{106{,}960};$$

and rounding off the constant to a more convenient figure, we have

$$l = \frac{W \times \text{R.P.M.}}{100{,}000}.$$

Cases will arise, especially with heavily loaded slow running shafts, in which this rule gives a bearing altogether too short for practice, sometimes not allowing room for the stud bosses on the cap, and also having too high a bearing value, which should be kept below 1,000 pounds per square inch. For shafts running about 80 R.P.M. or faster, the above rule gives excellent bearings, while for slower running shafts an investigation of the bearing value as well as the above rule at once determines the limiting length of the journal.

Chart Fig. 14 will be found of great convenience in determining the dimensions of journals. The example shown by the heavy line in the upper portion of the chart, shows that a journal under 700 pounds total pressure, and running 1,250 R.P.M. should be about 8 inches long. This at once determines the length of the journal and leaves the diameter

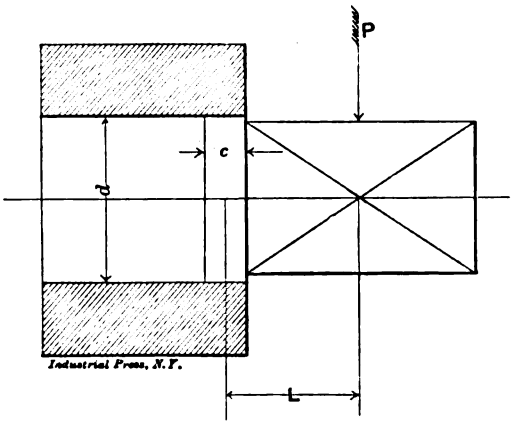

Fig. 12

to be determined by calculating the bending moments to the center of the journal. The example given in the lower part of the chart shows that a journal 4 inches in diameter and 8 inches long under 5,250 pounds total pressure, will have a bearing value of 163 pounds per square inch of projected area.

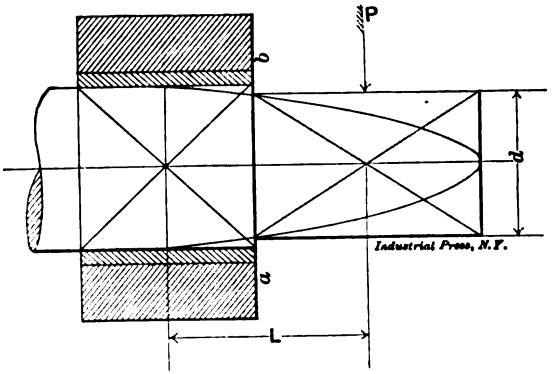

Fig. 13

A condition frequently met with is that of a shaft forced by pressure into one member, and revolving in another member, as in Fig. 12. The arm L is determined by laying off a distance c such that

$\frac{P}{c \times d}$ = the safe crushing strength of the metal composing the supporting member,

and taking L as the distance from the load P to the center of the strip c. It is excellent practice to provide slight shoulders wherever practicable, against which to key the gears, thus locating gears definitely for the assembling workman. Frequently a heavily loaded pinion demands a smaller shaft than the foregoing rules require, in order to leave sufficient metal over the key. This may be accomplished by making the diameter d at the section $a - b$, Fig. 13, coincident with the diameter of a paraboloid drawn as shown.

A most convenient solution of this problem is offered in Chart Fig 15, which also solves at a glance all problems regarding shaft diam-

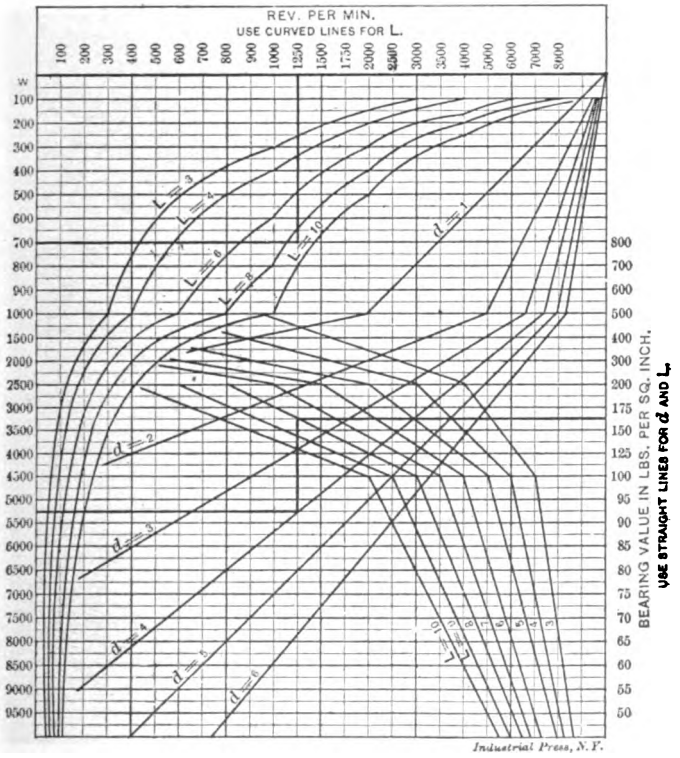

Fig. 14

eters to withstand any combination of moments. The shaft shown at the top is worked out in the chart by following the dotted lines. The shaft is subject to a bending moment of 247,500 inch-pounds and a twisting moment of 165,000 inch-pounds, hence $k = 1.5$, and $f = 9{,}000$. Enter the chart at the left at 165,000 inch-pounds and follow dotted line to the $f = 9{,}000$ line, thence up to the $k = 1.5$ line, thence over to the right, and read diameter of required shaft on the scale, 6¾ inches. It is now required to find the smallest permissible diameter for the end of the shaft according to the dimensions given. Follow the line marked

15 in the extreme left-hand column to first intersection with the line for 6¾ inches from the scale at the bottom of the chart, thence diagonally to the line marked 5½ at the extreme left, thence up, and read the required diameter on the scale at the top, 4⅞ inches.

For shafts subjected to simple bending or simple twisting moments

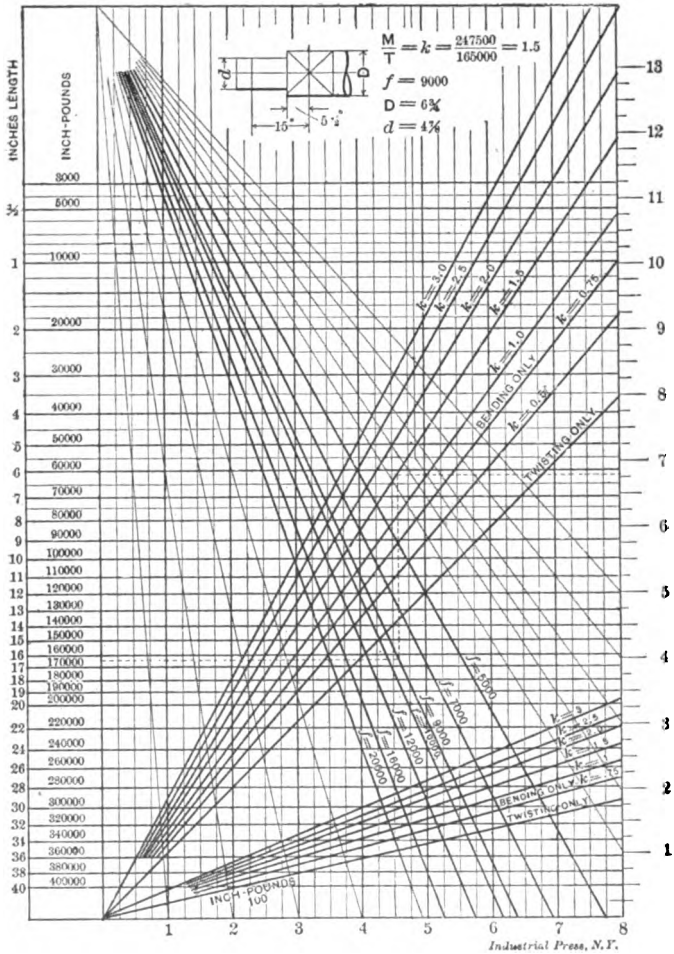

Fig. 15

use the lines so marked instead of the k lines. The set of lines marked $\frac{\text{inch-pounds}}{100}$ are to be used for smaller shafts by dividing all readings in the column of inch-pounds by 100. This makes the range of the chart from 30 to 400,000 inch-pounds.

CHAPTER II

EFFICIENCY OF MECHANISM*

WITH SPECIAL REFERENCE TO HOISTING MACHINERY

When undertaking the development of any machine the designer is promptly brought to face the question of the probable efficiency of the mechanism he wishes to employ. If the machine belongs to a class with which the designer has been long familiar he may be able to judge closely from past experience as to what efficiency to assume in his present calculations. If the designer cannot bring to his aid such past experience, he may be told by the chief engineer to assume a particular value for the efficiency. Failing in both past experience and the availability of the chief engineer, the designer may attempt a wild guess, more or less remote from actual conditions, possibly seeking information from a handbook, where he may find something like the following, from D. A. Low's "Pocket-book for Engineers":

Mechanical Efficiency of Machines

P = force acting at the driving point,
W = force acting at the working point,

$$r = \text{velocity ratio of the machine} = \frac{\text{velocity of working point}}{\text{velocity of driving point}}$$

p = value of P when $W = 0$,
e = a coefficient,
E = mechanical efficiency of the machine,
When friction is neglected $P \div W = r$.
When friction is taken into account $P = (1 + e)\ Wr + p$.
For a particular machine the preceding equation reduces to $P = mW + k$, where m and k are constants determined from experiments with the machine. Finally,

$$E = \frac{Wr}{(1 + e)\ Wr + p} = \frac{Wr}{m\,W + k}$$

This is exceedingly disappointing, as the inconvenience of experimenting with a particular machine yet unbuilt, with a view of determining constants to be used in calculations during its design, is apparent. Consequently the aforesaid wild guess is too often used as a basis from which to calculate the probable performance of the machine.

The determination of the efficiency of any elementary portion of a machine by analysis is, however, a comparatively simple matter, and by dividing the proposed machine into several such elementary portions, and determining by analysis the efficiency of each element, the approximate efficiency of the whole machine may be determined. The

* MACHINERY, March and April, 1903.

following analysis of some simple portions of machinery may easily be extended by the application of the same reasoning to other cases, and the tables may form a guide for an intelligent guess which will come nearer the truth than a wild guess.

Efficiency Defined

The force exerted to run any kind of machine is used in the performance of two functions: To perform the intended useful work for which the machine is designed; and to overcome the frictional resistances in the several parts of the machine. If the machine could be considered as running with absolutely no frictional resistance between its moving parts we should have the product of force into space moved equal to the product of load into space moved; or

$$P_1 s = L\,h;\ P_1 = \frac{L\,h}{s} \qquad (5)$$

in which P_1 = the theoretical force, which acting through a space s, will move a load L a certain distance h, under the assumption that there are no frictional resistances in the machine.

The force exerted through the space s must, however, overcome the frictional resistances within the machine, as well as the resistance of the load L through the distance h. Let W = the sum of all the frictional resistances within the machine, and w = the sum of all the distances through which the several frictional resistances are overcome. Then Ww = the work done in overcoming the frictional resistances of the several parts of the machine. The actual force, acting through a space s, besides being required to move the load a distance h, must in addition be sufficient to overcome the frictional resistances within the machine itself; so the actual effort required to move the load is,

$$P s = L\,h + W\,w, \text{ or } P = \frac{L\,h + W\,w}{s} \qquad (6)$$

Thus from (5) and (6) it is seen that the actual force P must be greater than the theoretical force P_1.

The ratio of the theoretical to the actual force is termed the efficiency of the machine; thus

$$e = \frac{P_1}{P}$$

As has been seen, P is always greater than P_1, and it follows that the efficiency of any machine being always less than unity, represents the percentage of the force exerted which is actually employed in moving the load. The use of this ratio expressing the efficiency is of the greatest value in practical problems relating to the force required to run any given machine; because, in practically all cases, the theoretical force

$$P_1 = \frac{L\,h}{s}$$

in which the three factors L, h, and s, are known, may be more or less easily determined, and a knowledge of the efficiency e of the particular machine under consideration then enables the designer to determine at once the force required for the particular case, as

$$e = \frac{P_1}{P}, \text{ and } P = \frac{P_1}{e}.$$

The value of e for any machine is easily computed when the efficiencies of the several moving parts are known. Let e_1, e_2, e_3 - - - e_n be the efficiencies of the several moving parts of the machine; then the efficiency of the whole machine is,

$$e = e_1 \times e_2 \times e_3 \times \text{ - - - } e_n \qquad (7)$$

Since the moving parts of most machinery may be reduced to a few classes or heads, a knowledge of the average values of the efficiency of each class will, in most cases, enable the designer to arrive at results sufficiently accurate for practical purposes.

In the preceding discussion it has been assumed that the force P acts in a direction to move the load forward, and that the frictional resistances act against the force P, in the same direction as the load L. The relation of power to load and frictional resistances is well illustrated in the case of a crane; and such a machine will hereafter be used in the discussion, it being understood that what is said applies as well to any class of machinery.

Efficiency of Backward Motion

When a crane is at rest with a load L suspended, the force P is being exerted to maintain the load in suspension, and prevent it running down. In this case the frictional resistances within the machine are acting in the same direction as P, and usually the work Ww done in overcoming them is the same for the backward as for the forward motion; while L becomes the actuating force, and P acts as a retarding force to prevent acceleration when lowering the load.

Thus, when the load is being lowered, we have

$$Lh = Ps + Ww, \text{ or } P = \frac{Lh - Ww}{s} \qquad (8)$$

while as before we have

$$P_1 = \frac{Lh}{s} \qquad (9)$$

which clearly indicates that when lowering the load, the force P, which must act to prevent acceleration, is less than the theoretical force P_1. By the efficiency of a machine for the backward motion is understood the ratio of the actual force required to prevent acceleration when lowering the load, to the theoretical force required to effect the same result could the frictional resistances within the machine be neglected.

Thus for backward motion,

$$e_b = \frac{P}{P_1}$$

Substituting in this equation the values of P and P_1 in (8) and (9) we have,

$$e_b = \frac{\dfrac{Lh - Ww}{s}}{\dfrac{Lh}{s}} = \frac{Lh - Ww}{Lh}$$

from which we see that when $Ww = Lh$, $e_b = 0$, and the internal forces of frictional resistance and L are balanced without the application of P; also when Ww is greater than Lh, e_b has a negative value, and an additional force P acting in the same direction as L, must be applied at the point of application of the power in order to lower the load.

A negative efficiency on the backward motion may therefore be taken as an indication that the load will remain suspended upon the removal of the motive power. This is a feature especially to be desired in all cranes as a safety device for those operating them. It is, however, often obtained by the sacrifice of high efficiency on the forward movement. For the forward motion we had

$$e = \frac{P_1}{P}$$

and substituting in this equation the values of P_1 and P from (5) and (6) we have,

$$e = \frac{\dfrac{Lh}{s}}{\dfrac{Lh + Ww}{s}} = \frac{Lh}{Lh + Ww}$$

which, under the assumption that the work done in overcoming the frictional resistances within the machine is the same for both forward and backward motion, and assuming the limiting case $Ww = Lh$, becomes

$$e = \frac{Lh}{Lh + Lh} = \frac{1}{2}$$

Thus the efficiency for the forward motion of all elementary self-locking machines which automatically sustain the load never exceeds 50 per cent, while for cases where e_b is negative the efficiency is less than 50 per cent.

This statement is true for all elements in machine design intended to be used as power transmission elements for the forward movement, while being expected, from the nature of the design, to resist all backward impulses due to the load when the power is removed. It is possible, however, by the introduction of devices which, being idle during the forward movement, are called into action by the slightest backward movement of the parts to which they are attached, and which, being so put into action, present additional frictional resistances acting in the direction of the force P, to design a machine of any given

efficiency for the forward movement, which will automatically sustain the load when the power is removed.

Rigidity of Ropes

When considering the efficiency of the different classes of mechanism combined to form a hoisting machine it will be seen that the resistance of ropes to bending around sheaves and drums enters largely into the equations for the efficiency of these parts. Any rope offers resistance, by reason of its rigidity, when wound onto a sheave or drum, while by

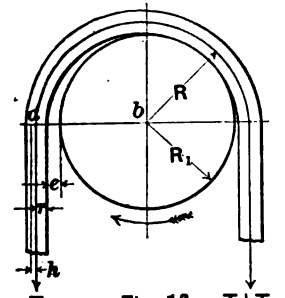

Fig. 16.

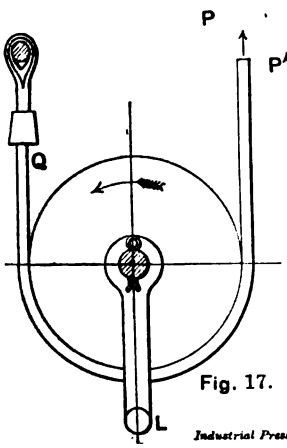

Fig. 17.

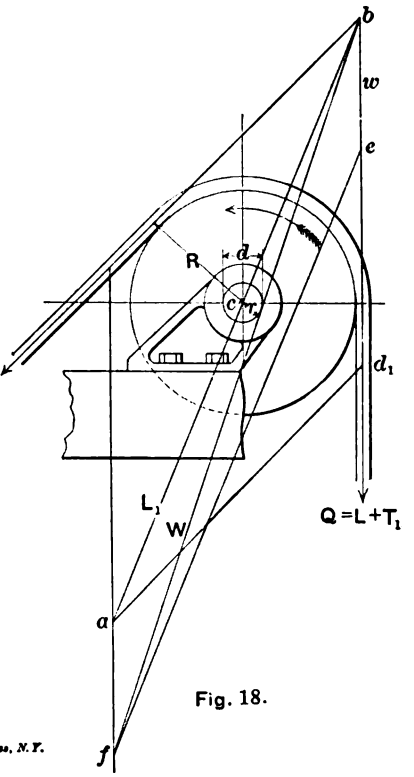

Fig. 18.

Industrial Press, N.Y.

Figs. 16 to 18

reason of its elasticity, little or no resistance is offered when it unwinds and passes off the sheave or drum.

In Fig. 16 let T = the tension in the *on* side of the rope about to be wound around a sheave, and $T + T_1$ = the tension in the *off* side of the rope; then T_1 = the force required to bend the rope around the sheave while under the tension T. Let R_1 = the radius of the sheave, and d = the diameter of the rope, while r = the radius of the rope $\frac{d}{2}$.

Then let $R_1 + r = R$.

The lever arm of the rope axis on the *off* side is,

$$R_1 + r = R.$$

Considering the *on* side of the rope, the fibers on the outside are stretched, while those on the inside are compressed, and the resultant of these two forces with the force T will lie to the outside of the rope axis a distance denoted by h.

Then the lever arm of the *on* side is

$$ab = R_1 + e + r + h = R + c + h.$$

The distance c is given by DuBois as

$$e = \frac{k}{T} \text{ for hemp rope, and } c = \frac{k\,R}{T} \text{ for wire ropes,}$$

where k is a constant to be determined by experiment.

The condition for equilibrium is then for wire ropes

$$T(R + \frac{k\,R}{T} + h) = (T + T_1)R, \text{ or } T_1 = k + \frac{T\,h}{R}.$$

Experiment gives this formula the form,

$$T_1 = 1.08 + \frac{0.09\,T}{R} \text{ for wire ropes,}$$

$$T_1 = \frac{100 + 0.22\,T}{R} \text{ for tarred hemp rope,}$$

$$T_1 = \frac{4 + 0.065\,T}{R} \text{ for untarred hemp rope,}$$

where T and T_1 are expressed in pounds and R in inches. (DuBois.)

The efficiency of the rope, neglecting the journal friction of the sheave, is

$$e = \frac{T}{T + T_1}.$$

Example: A one-inch wire rope under 20,000 pounds tension is wound over a 15-inch sheave. Neglecting the journal friction of the sheave, what force $(T + T_1)$ will be required to raise the load of 20,000 pounds?

Here $T = 20{,}000.$

$R_1 = 7.5.$

$R = 8.$

then, $T_1 = 1.08 + \frac{0.09 \times 20{,}000}{8} = 226.08$ pounds,

and $T + T_1 = 20{,}226.08$ pounds.

The efficiency in this case is

$$e = \frac{T}{T + T_1} = \frac{20{,}000}{20{,}226.08} = 0.989.$$

Table V gives the efficiency of plough steel wire ropes when strained to their full working capacity, and wound over sheaves or upon drums of the smallest diameter that should ever be used with each size of

rope. It will be observed that the diameters given in this table are much smaller than those recommended by the rope manufacturers as the minimum to be used with each size of rope. The diameters given here are those in constant use by many of the foremost crane builders, it being found impracticable to use the large sheaves and drums recommended in the space at the disposal of the designers.

TABLE V. EFFICIENCY OF WIRE ROPES

Diam. of Rope.	Min. Diam. of Drum or Sheave under Rope	Efficiency $e = \frac{T}{T + T_1}$
½	10	0.982
⅝	12	0.985
¾	14	0.987
⅞	16	0.989
1	18	0.990
1⅛	20	0.991
1¼	22	0.992
	Average,	0.988

The Fixed Pulley

Let Fig. 18 represent a fixed pulley or rope sheave, over which a rope is passed, by means of which a force P is to lift a load L. The spaces s and h through which P and L move, respectively, are equal ($s = h$), hence, neglecting all friction and lost power, we have the theoretical force,

$$P_1 = L \qquad (10)$$

The wasteful resistances to be overcome are: 1st, the stiffness of the rope requiring the additional force T_1, which may be added to the load, making the total force acting in the *on* side of the rope

$$Q = L + T_1, \text{ and}$$

2nd, the journal friction due to the resultant pressure, L_1 of P and Q, and the weight w of the sheave.

Produce P and Q to meet at b. Lay off to any convenient scale $bd_1 = Q$, and draw d_1a parallel to Pb. Then, similarly, lay off P on Pb. Then $ab = L_1$, and when measured to scale gives the resultant pressure on the journal due to P and Q. Lay off on bd_1 the same scale as before, $be = w$, the weight of the sheave. Draw ef parallel to ab, and draw bf. Then $bf = W$, and when measured to scale gives the total pressure W of the journal, due to the resultant of the forces P and Q and the weight w of the sheave.

We now have three forces acting, P, Q, and W, of which Q and W are acting in the same direction, opposed to P, and as the distances through which these forces move are proportional to the lever arm in each case, we have the condition of equilibrium, letting the coefficient of journal friction $= \phi$

$$P R = Q R + W r \phi$$

$$P = \frac{Q R + W r \phi}{R} \qquad (11)$$

From (10) and (11) we have the efficiency

$$e = \frac{P_1}{P} = \frac{L\,R}{Q\,R + W\,r\,\phi}$$

In making calculations, we may at first neglect the stiffness of the rope, in which case $Q = L$, and we have the efficiency with the rope neglected,

$$e_1 = \frac{L\,R}{L\,R + W\,r\,\phi}$$

Let e_2 = the efficiency of the rope from Table V. Then we have the efficiency, including the rope,

$$e = e_1 \times e_2$$

The maximum value of L_1 is reached when P and Q are parallel, and is then $P + Q = L_1$; the weight w of the sheave may be neglected as having little influence upon the efficiency; the rigidity of the rope may be neglected at first and brought into the solution afterwards, as shown above; then $P + Q = 2L$. Then under these assumptions, *viz.*, $W = L_1 = P + Q = 2L$, and $Q = L$, we have by substitution in (11)

$$P = \frac{L\,R + 2L\,r\,\phi}{R} \qquad (12)$$

Thus from (10) and (12) we get the minimum efficiency of a fixed sheave, neglecting the weight of the sheave, and letting the efficiency of the rope $= e_2 =$ as above,

$$e = \frac{e_2 P_1}{P} = \frac{e_2 L}{\frac{L\,R + 2L\,r\,\phi}{R}} = \frac{e_2 R}{R + d\,\phi}.$$

Table VI gives the minimum efficiency of the smallest diameter of sheave allowable with each size of rope, assuming in each case the load L on the rope to be the full working strength of the rope, the arc of contact to be 180 degrees, the coefficient of journal friction 0.08, the diameter of journal pin 4 inches, and values of e_2 taken from Table V.

TABLE VI. EFFICIENCY OF THE FIXED SHEAVE

Diam. of rope	Diam. Sheave	e_2 for Rope, Table V	e for Sheave	Coef. of Resistance, k
½	10	0.982	0.925	1.081
⅝	12	0.985	0.936	1.068
¾	14	0.987	0.945	1.058
⅞	16	0.989	0.952	1.050
1	18	0.990	0.957	1.045
1⅛	20	0.991	0.961	1.040
1¼	22	0.992	0.965	1.036
	Average	0.988	0.948	1.055

From (12) we have, including the efficiency of the rope e_2,

$$P = \left(\frac{R + d\,\phi}{e_2 R}\right) L, \text{ and letting } \frac{R + d\,\phi}{e_2 R} = k, \text{ we have}$$

$$P = k\,L \qquad (13)$$

in which k is the coefficient of resistance of the sheave and rope combined. From (10) and (13) we have,

$$e = \frac{P_1}{P} = \frac{L}{k\,L} = \frac{1}{k}, \text{ and } k = \frac{1}{e}$$

In the fifth column of Table VI, the values of k are calculated under the same conditions as are those of e, so that knowing either the power applied, P, or the load to be lifted, L, the other may be easily calculated with sufficient accuracy by the use of the above tabular values in the two equations

$$P = k\,L \text{ and } L = e\,P.$$

For the backward motion when the load is descending, we have

$$L = k\,P, \text{ and } P = \frac{L}{k}.$$

The distance through which L acts is equal to the distance through which P acts; hence letting s equal this distance, we have the work performed at the point of application of each force, P and L, as $P\,s$, and

$$P\,s = \frac{L\,s}{k},$$

and the efficiency

$$e = \frac{P\,s}{L\,s} = \frac{1}{k}.$$

Thus the efficiency of a fixed sheave is the same for the backward as for the forward motion.

Movable Pulley or Sheave

In the case of movable pulleys or sheaves, Fig. 17, as in pulley blocks, the ropes are always parallel, or nearly so, and letting Q = the tension produced in the *on* side of the rope by the load L, we have

$$P = k\,Q$$

and the condition of equilibrium is

$$L = P + Q = Q + k\,Q = Q\,(1 + k).$$

To raise the load L a distance s, each end of the rope must be shortened by a distance equal to s, and as the end Q is fixed, this is accomplished by the end P moving upwards a distance equal to $2s$.

The total work performed is then $P \times 2s$, or $2kQs$,
and the useful work performed is Ls, or $Qs\,(1 + k)$,
while the efficiency is

$$e = \frac{Qs\,(1 + k)}{2kQs} = \frac{1 + k}{2k}$$

The efficiency of a fixed sheave was shown to be $e = 1/k$, and as k is always greater than unity, we see that the efficiency of a movable pulley is greater than that of a fixed pulley.

For the reverse motion, with the load descending, we shall have the tension in the ends of the rope reversed, and $Q = kP$, while as before $L = P + Q = P + kP = P\,(1 + k)$.

The work performed is $Ls = Ps\ (1 + k)$, while the useful work performed is $2Ps$, and the efficiency is

$$e = \frac{2\,Ps}{Ps\,(1+k)} = \frac{2}{1+k}$$

for the backward movement.

Table VII gives the minimum forward efficiency under the same conditions as for Table VI.

TABLE VII. EFFICIENCY OF THE MOVABLE PULLEY

Diam. of Rope	Diam Sheave	Coef. Resistance k	Efficiency $e = \frac{1+k}{2k}$
½	10	1.081	0.962
⅝	12	1.068	0.968
¾	14	1.058	0.972
⅞	16	1.050	0.976
1	18	1.045	0.978
1⅛	20	1.040	0.980
1¼	22	1.036	0.982
	Average	1.055	0.974

The Tackle

Any combination of fixed and movable pulleys or sheaves whereby power is multiplied, enabling large resistances to be overcome, is called tackle. The most usual form of tackle is that shown in Fig. 21, in which A represents the fixed sheaves mounted in some portion of the machine, and B represents the movable sheaves in the block to which the load is attached. The sheaves are usually of one diameter, and mounted upon one pin, those in the figure being made of varying diameters to enable the winding of the ropes to be clearly shown. By means of the tables given for the fixed and movable pulleys we may obtain the efficiency of any arrangement of tackle. Inasmuch as the tackle shown represents a large majority of those in use, it is well to investigate the efficiency of such tackle as a unit.

The efficiency is in inverse proportion to the number of sheaves in the tackle, which is determined by the number of runs of rope to be used, which in turn is determined (friction being neglected) by the relation

$$\frac{L}{n} = t, \text{ or } n = \frac{L}{t}$$

in which L = the load, n = the number of ropes, t = the tension in each rope, L and t being the known factors determining n.

Thus neglecting friction and all harmful resistances, we have

$$P_1 = \frac{L}{n}$$

Taking all harmful resistances into account, it will be seen that the tensions in the several runs of rope are not equal. Thus if t = the tension in the first rope, $t_1 = kt$ = the tension in the second rope, $t_2 = kt_1 = k^2t$ = the tension in the third rope, and $t_{(n-1)} = k^{(n-1)}\ t =$ the tension in the nth rope. The power end of the rope is not included in the n runs of rope as it has no direct lifting power, the n

runs including only those directly connected to the movable block.

In Fig. 21, t_3 = the tension in the last run of rope, and as shown before, $t_1 = kt_2 = k^2t$ = the tension in the power end of the rope.

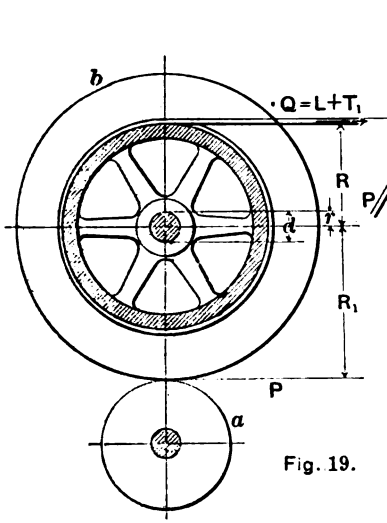

Fig. 19.

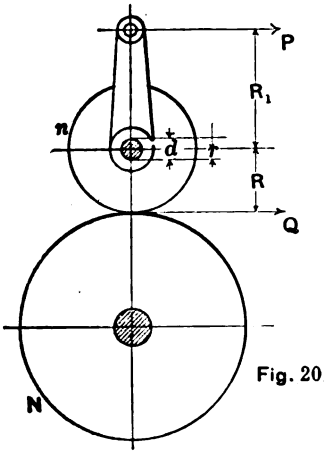

Fig. 20.

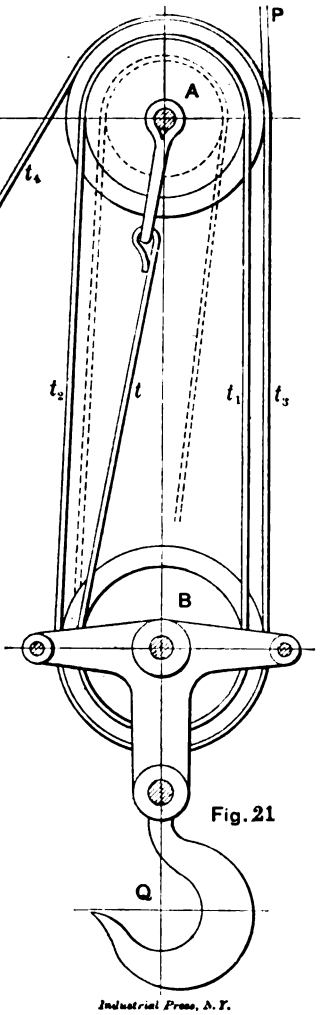

Fig. 21

Industrial Press, N. Y.

Figs. 19 to 21

In general, then for n runs of rope, the tension in the power end = $k^n\ t$, or

$$P = k^n\ t \qquad (14)$$

The harmful resistances may be considered as added to the load, which then becomes equal to the sum of the tensions in the several ropes connected to the movable block, and we have

$$Q = t + k\,t + k^2\,t + k^3\,t \quad \cdot \quad + k^{(n-1)}\,t$$

$$Q = t\,(1 + k + k^2 + k^3 + k^4 \quad \cdot \quad + k^{(n-1)}) = \frac{t\,(k^n - 1)}{k - 1} \qquad (15)$$

Denoting the distance through which P moves in a unit of time by s, the distance through which Q moves in the same time is s/n, and the efficiency of the tackle is

$$e = \frac{\frac{s}{n}Q}{P\,s} = \frac{Q}{n\,P}$$

Substituting the values of P and Q from (14) and (15) we have

$$e^* = \frac{\frac{t\,(k^n - 1)}{k - 1}}{n\,k^n\,t} = \frac{k^n - 1}{n\,k^n\,(k - 1)}$$

TABLE VIII. EFFICIENCY OF TACKLE

Diam of Rope.	Min. Diam. of Sheave.	Value of k.	Efficiency $= e = \frac{k^n - 1}{n\,k^n\,(k-1)}$ Number of Runs of Rope					Average.
			2	3	4	5	6	
½	10	1.081	.888	.856	.823	.798	.767	.825
⅝	12	1 068	.909	.879	.853	.826	.800	.853
¾	14	1.058	915	.893	.869	.843	.823	.868
⅞	16	1.050	.927	.907	.880	.861	.845	.884
1	18	1.045	.935	.915	.897	.875	.860	.896
1⅛	20	1.040	.941	.925	.898	.880	.871	.903
1¼	22	1 036	.948	.933	.909	.897	.883	.912
	Average		.923	.915	.875	853	.835	

Table VIII gives the efficiency of tackle under the same conditions as were assumed for single fixed and movable pulleys.

Winding Drums

Let Fig. 19 represent a winding drum operated by two gears, of which the pitch lines are a and b, by means of which a load L is to be moved by the application of a force P at the pitch line of the larger gear b. The distances through which P and L move are proportional to the radii of the gear and drum, so that

$$P_1\,R_1 = L\,R, \text{ and } P_1 = \frac{L\,R}{R_1} \qquad (16)$$

* The formula here given by the author does not give the strictly *theoretical* efficiency. To obtain this only the original weight Q at the hook of the tackle should be considered. This would give $e = \frac{Q}{nk^nt}$, Q denoting the original load only.

The wasteful resistances to be overcome are: 1st, the stiffness of the rope requiring an additional force T_1, which may be added to the load L, making the total force acting in the rope

$$Q = L + T_1, \text{ and}$$

2d, the journal friction due to the resultant pressure of P and Q, and to the weight W of the drum when wound full of rope or chain.

The stiffness of the rope may be neglected at first, to be brought into the solution later, which makes $Q = L$, and assuming P and Q to be parallel, the maximum value of their resultant is $P + Q = 2L$, when the condition of equilibrium (ϕ being the coefficient of journal friction) becomes

$$P R_1 = L R + 2 L r \phi + W r \phi = L R + r \phi (2 L + W)$$

$$P = \frac{L R + r \phi (2 L + W)}{R_1} \qquad (17)$$

Letting the efficiency of the rope $= e_2$, and neglecting the weight W of the drum and rope, we get from (16) and (17) the efficiency

$$e = \frac{P_1}{P} e_2 = \frac{\frac{L R}{R_1}}{\frac{L R + 2 r \phi L}{R_1}} e_2$$

$$e = \frac{e_2 R}{R + 2 r \phi} = \frac{e_2 R}{R + d \phi}$$

where d equals the diameter of drum shaft.

Table IX gives the efficiency of drums for various sizes of ropes strained to their full capacity, the drum shafts being of such assumed diameter as to cover extreme practice, and the coefficient of journal friction being taken as 0.08.

TABLE IX. EFFICIENCY OF WINDING DRUMS

Diam. of Rope	Min. Diam. of Drum	Value of e_2	Assumed Diam. of Shaft	$e = \frac{e_2 R}{R + d\phi}$	Coef. of Resistance $k = \frac{1}{e}$
½	10	0.982	3	0.939	1.064
⅝	12	0.985	3½	0.943	1.060
¾	14	0.987	4	0.945	1.058
⅞	16	0.989	4½	0.947	1.056
1	18	0.990	5	0.950	1.053
1⅛	20	0.991	5½	0.951	1.051
1¼	22	0.992	6	0.953	1.049
			Average,	0.949	1.053

In the case of heavy drums wound with large wire rope or heavy chain, it is sometimes desirable to take into account the weight W, in which case the formula should be used.

Gearing

In Fig. 20, let P = the power applied at a radius R_1, to drive a gear of pitch radius R, having n teeth, and meshing with a gear having

e_4 = the efficiency of tackle *D*, 4 ropes (Table No. VIII)..... = 0.875
e = the efficiency of the complete machine = $e_1 \times e_2 \times e_3 \times e_4$, or
$e = 0.934 \times 0.934 \times 0.949 \times 0.875 = 0.723$.

While on account of the small force available for operation, the hand crane is usually double geared, the steam crane, being operated by much greater force, is often single-geared. Thus, should a steam crane be applied to the elementary crane of Fig. 22, the shaft *A*, pinion *a*, and gear *b* would be omitted, and shaft *B* would become the engine

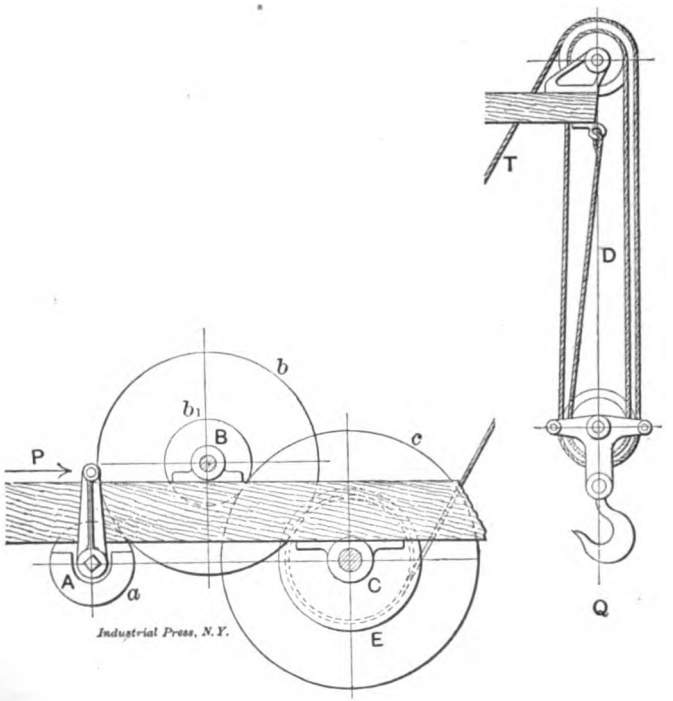

Fig. 22

shaft. The mechanical efficiency of small, simple slide valve engines is given by several authorities as 85 per cent to 90 per cent. Assuming the smaller of these two values, we have

e_1 = the efficiency of the engine..... 0.850
e_2 = the efficiency of the pinion and gear..... 0.934
e_3 = the efficiency of the drum and shaft..... 0.949
e_4 = the efficiency of the tackle..... 0.875
$e = 0.850 \times 0.934 \times 0.949 \times 0.875 =$ 0.656

Taking the above value obtained for the hand crane as a basis, we e the coefficient of resistance for the complete crane, $k = 1/e =$ 2 = 1.38.

ample: One man can exert a force of about 30 pounds upon a k handle. Four men are working at a crank 16 inches long,

the ratio of the gears a-b and b-c is 1 to 4 in each case, and the diameter of the drum is 24 inches; the force or pull in the rope wound around the drum is

$$T = \frac{120 \times 16 \times 4 \times 4}{12} = 2{,}560 \text{ pounds.}$$

Fig. 22 shows the crane as having four runs of rope, which gives the load

$$Q = 2{,}560 \times 4 = 10{,}240 \text{ pounds.}$$

The actual load L that can be raised by four men working this crane would be, assuming the efficiency as 72 per cent,

$$L = 10{,}240 \times 0.72 = 7{,}372 \text{ pounds, or about } 3\tfrac{1}{2} \text{ tons.}$$

Conversely: A load of $3\frac{1}{2}$ tons is to be raised by such a crane. We have the force or pull in the rope

$$T = \frac{7{,}000}{4} = 1{,}750 \text{ pounds.}$$

Then the power P required is

$$P = \frac{1{,}750 \times 12}{4 \times 4 \times 16} = 82 \text{ pounds, nearly.}$$

The coefficient of resistance is 1.38, and we have the actual force required on the crank F as

$$P = 82 \times 1.38 = 113 \text{ pounds, nearly,}$$

which would be fair work for four men.

No. 21. MEASURING TOOLS.—History and Development of Standard Measurements; Special Calipers; Compasses; Micrometer Tools; Protractors, etc.

No. 22. CALCULATION OF ELEMENTS OF MACHINE DESIGN.—Factor of Safety; Strength of Bolts; Riveted Joints; Keys and Keyways; Toggle-joints.

No. 23. THEORY OF CRANE DESIGN.—Jib Cranes; Calculation of Shaft, Gears, and Bearings; Force Required to Move Crane Trolleys, etc.

No. 24. EXAMPLES OF CALCULATING DESIGNS.—Charts in Designing; Punch and Riveter Frames; Shear Frames; Billet and Bar Passes; etc.

No. 25. DEEP HOLE DRILLING.—Methods of Drilling; Construction of Drills.

No. 26. MODERN PUNCH AND DIE CONSTRUCTION.—Construction and Use of Sub-press Dies; Modern Blanking Die Construction; Drawing and Forming Dies.

No. 27. LOCOMOTIVE DESIGN, Part I.—Boilers, Cylinders, Pipes and Pistons.

No. 28. LOCOMOTIVE DESIGN, Part II.—Stephenson Valve Motion; Theory, Calculation and Design of Valve Motion; The Walschaerts Valve Motion.

No. 29. LOCOMOTIVE DESIGN, Part III.—Smokebox; Exhaust Pipe; Frames; Cross-heads; Guide Bars; Connecting-rods; Crank-pins; Axles; Driving-wheels.

No. 30. LOCOMOTIVE DESIGN, Part IV.—Springs, Trucks, Cab and Tender.

No. 31. SCREW THREAD TOOLS AND GAGES.

No. 32. SCREW THREAD CUTTING.—Change Gears; Thread Tools; Kinks.

No. 33. SYSTEMS AND PRACTICE OF THE DRAFTING-ROOM.

No. 34. CARE AND REPAIR OF DYNAMOS AND MOTORS.

No. 35. TABLES AND FORMULAS FOR SHOP AND DRAFTING-ROOM.—The Use of Formulas; Solution of Triangles; Strength of Materials; Gearing; Screw Threads; Tap Drills; Drill Sizes; Tapers; Keys; Jig Bushings, etc.

No. 36. IRON AND STEEL.—Principles of Manufacture and Treatment.

No. 37. BEVEL GEARING.—Rules and Formulas; Examples of Calculation; Tooth Outlines; Strength and Durability; Design; Methods of Cutting Teeth.

No. 38. GRINDING AND LAPPING.—Grinding and Grinding Machines; Disk Grinders; Bursting of Emery Wheels; Kinks; Lapping Flat Work and Gages.

No. 39. FANS, VENTILATION AND HEATING.—Fans; Heaters; Shop Heating.

No. 40. FLY-WHEELS.—Their Purpose, Calculation and Design.

No. 41. JIGS AND FIXTURES, Part I.—Principles of Jig and Fixture Design; Drill and Boring Jig Bushings; Locating Points; Clamping Devices.

No. 42. JIGS AND FIXTURES, Part II.—Open and Closed Drill Jigs.

No. 43. JIGS AND FIXTURES, Part III.—Principles of Boring Jig Design; Boring, Reaming and Facing Tools; Milling and Planing Fixtures.

No. 44. MACHINE BLACKSMITHING.—Systems, Tools and Machines used.

No. 45. DROP FORGING.—Lay-out of Plant; Methods of Drop Forging; Dies.

No. 46. HARDENING AND TEMPERING.—Hardening Plants; Treating High-Speed Steel; Hardening Gages; Case-hardening; Hardening Kinks.

No. 47. ELECTRIC OVER-HEAD CRANES.—Design and Calculation.

No. 48. FILES AND FILING.—Types of Files; Using and Making Files.

No. 49. GIRDERS FOR ELECTRIC OVERHEAD CRANES.

No. 50. PRINCIPLES AND PRACTICE OF ASSEMBLING MACHINE TOOLS, Part I.

No. 51. PRINCIPLES AND PRACTICE OF ASSEMBLING MACHINE TOOLS, Part II.

No. 52. ADVANCED SHOP ARITHMETIC FOR THE MACHINIST.

No. 53. USE OF LOGARITHMS, AND LOGARITHMIC TABLES.

No. 54. SOLUTION OF TRIANGLES, Part I.—Methods, Rules and Examples for Practice.

No. 55. SOLUTION OF TRIANGLES, Part II.—Tables of Trigonometric Functions.

The Industrial Press, Publishers of MACHINERY

49-55 Lafayette Street Subway Station, Worth Street **New York City, U.S.A.**

PRICE 25 CENTS

BLANKING DIES

PRINCIPLES OF THEIR DESIGN AND EXAMPLES FROM PRACTICE

THIRD REVISED EDITION

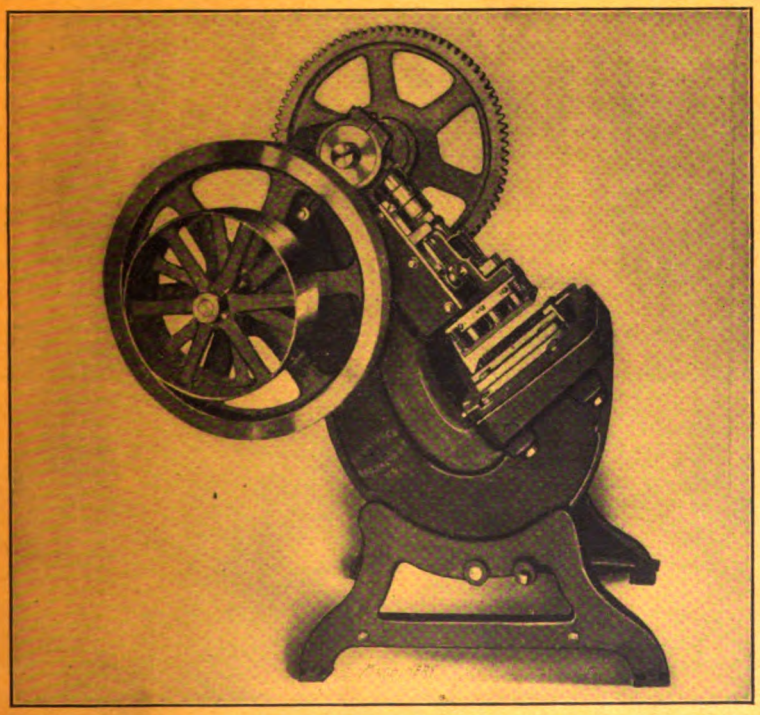

MACHINERY'S REFERENCE BOOK NO. 13
PUBLISHED BY MACHINERY, NEW YORK

MACHINERY'S REFERENCE BOOKS

This treatise is one unit in a comprehensive Series of Reference books originated by MACHINERY, and including an indefinite number of compact units, each covering one subject thoroughly. The whole series comprises a complete working library of mechanical literature. The price of each books is 25 cents (one shilling) delivered anywhere in the world.

LIST OF REFERENCE BOOKS

No. 1. Worm Gearing.—Calculating Dimensions; Hobs; Location of Pitch Circle; Self-Locking Worm Gearing, etc.

No. 2. Drafting-Room Practice.—Systems; Tracing, Lettering and Mounting.

No. 3. Drill Jigs.—Principles of Drill Jigs; Jig Plates; Examples of Jigs.

No. 4. Milling Fixtures.—Principles of Fixtures; Examples of Design.

No. 5. First Principles of Theoretical Mechanics.

No. 6. Punch and Die Work.—Principles of Punch and Die Work; Making and Using Dies; Die and Punch Design.

No. 7. Lathe and Planer Tools.—Cutting Tools; Boring Tools; Shape of Standard Shop Tools; Forming Tools.

No. 8. Working Drawings and Drafting-Room Kinks.

No. 9. Designing and Cutting Cams.—Drafting of Cams; Cam Curves; Cam Design and Cam Cutting.

No. 10. Examples of Machine Shop Practice.—Cutting Bevel Gears; Making a Worm-Gear; Spindle Construction.

No. 11. Bearings.—Design of Bearings; Causes of Hot Bearings; Alloys for Bearings; Friction and Lubrication.

No. 12. Out of print.

No. 13. Blanking Dies.—Making Blanking Dies; Blanking and Piercing Dies; Split Dies; Novel Ideas in Die Making.

No. 14. Details of Machine Tool Design.—Cone Pulleys and Belts; Strength of Countershafts; Tumbler Gear Design; Faults of Iron Castings.

No. 15. Spur Gearing.—Dimensions; Design; Strength; Durability.

No. 16. Machine Tool Drives.—Speeds and Feeds; Single Pulley Drives; Drives for High Speed Cutting Tools.

No. 17. Strength of Cylinders.—Formulas, Charts, and Diagrams.

No. 18. Shop Arithmetic for the Machinist.—Tapers; Change Gears; Cutting Speeds; Feeds; Indexing; Gearing for Cutting Spirals; Angles.

No. 19. Use of Formulas in Mechanics.—With numerous applications.

No. 20. Spiral Gearing.—Rules, Formulas, and Diagrams, etc.

No. 21. Measuring Tools.—History of Standard Measurements; Calipers; Compasses; Micrometer Tools; Protractors.

No. 22. Calculation of Elements of Machine Design.—Factor of Safety; Strength of Bolts; Riveted Joints; Keys and Keyways; Toggle-joints.

No. 23. Theory of Crane Design.—Jib Cranes; Shafts, Gears, and Bearings; Force to Move Crane Trolleys; Pillar Cranes.

No. 24. Examples of Calculating Designs.—Charts in Designing; Punch and Riveter Frames; Shear Frames; Billet and Bar Passes; etc.

No. 25. Deep Hole Drilling.—Methods of Drilling; Construction of Drills.

No. 26. Modern Punch and Die Construction.—Construction and Use of Subpress Dies; Modern Blanking Die Construction; Drawing and Forming Dies.

No. 27. Locomotive Design, Part I.—Boilers, Cylinders, Pipes and Pistons.

No. 28. Locomotive Design, Part II.—Stephenson and Walschaerts Valve Motions; Theory, Calculation and Design.

No. 29. Locomotive Design, Part III.—Smokebox; Exhaust Pipe; Frames; Cross-heads; Guide Bars; Connecting-rods; Crank-pins; Axles; Driving-wheels.

No. 30. Locomotive Design, Part IV.—Springs, Trucks, Cab and Tender.

No. 31. Screw Thread Tools and Gages.

No. 32. Screw Thread Cutting.—Lathe Change Gears; Thread Tools; Kinks.

No. 33. Systems and Practice of the Drafting-Room.

No. 34. Care and Repair of Dynamos and Motors.

No. 35. Tables and Formulas for Shop and Drafting-Room.—The Use of Formulas; Solution of Triangles; Strength of Materials; Gearing; Screw Threads; Tap Drills; Drill Sizes; Tapers; Keys, etc.

No. 36. Iron and Steel.—Principles of Manufacture and Treatment.

No. 37. Bevel Gearing.—Rules and Formulas; Examples of Calculation; Tooth Outlines; Strength and Durability; Design; Methods of Cutting Teeth.

No. 38. Out of print. See No. 98.

No. 39. Fans, Ventilation and Heating.—Fans; Heaters; Shop Heating.

No. 40. Fly-Wheels.—Their Purpose, Calculation and Design.

No. 41. Jigs and Fixtures, Part I.—Principles of Design; Drill Jig Bushings; Locating Points; Clamping Devices.

No. 42. Jigs and Fixtures, Part II.—Open and Closed Drill Jigs.

No. 43. Jigs and Fixtures, Part III.—Boring and Milling Fixtures.

No. 44. Machine Blacksmithing.—Systems, Tools and Machines used.

No. 45. Drop Forging.—Lay-out of Plant; Methods of Drop Forging; Dies.

No. 46. Hardening and Tempering.—Hardening Plants; Treating High-Speed Steel; Hardening Gages.

No. 47. Electric Overhead Cranes.—Design and Calculation.

No. 48. Files and Filing.—Types of Files; Using and Making Files.

No. 49. Girders for Electric Overhead Cranes.

(See inside back cover for additional titles)

MACHINERY'S REFERENCE SERIES

EACH NUMBER IS ONE UNIT IN A COMPLETE LIBRARY OF MACHINE DESIGN AND SHOP PRACTICE REVISED AND REPUBLISHED FROM MACHINERY

NUMBER 13

BLANKING DIES

THIRD EDITION—REVISED AND ENLARGED

CONTENTS

Introduction - - - - - - - - - - - 3
Method of Making Blanking Dies, by C. F. EMERSON - 5
Blanking and Piercing Dies for Washers, by C. F. EMERSON - - - - - - - - - - 12
Making Blanking Dies to Cut Stock Economically, by C. F. EMERSON - - - - - - - - - 18
Construction of Split Dies, by C. F. EMERSON - - 26
Stop-Pins for Press-Work, by H. A. S. HOWARTH - - 29
Practical Examples in Die Design, by RALPH E. FLANDERS 37

Copyright, 1910, The Industrial Press, Publishers of MACHINERY, 49-55 Lafayette Street, New York City

INTRODUCTION

It is rather difficult to classify and give proper definitions of the many varying kinds and types of dies used on the power press for rapid production of duplicate work. While there are, of course, some general classes into which all tools of this description may be divided, the various types overlap, so to say, and one is sometimes in doubt as to the proper classification of tools which combine the features of different types. In the following, however, the distinctions between the main types have been pointed out in general outlines, the definitions being broad enough to permit of adjustment according to special conditions.

All dies may, in the first place, be divided into two general classes: *cutting dies* and *shaping dies*. Cutting dies include all dies which simply cut or punch out required pieces of work from the stock fed into the press, without changing the condition or form of the stock in the plane in which it was located in the material from which it is cut. Shaping dies include all dies which change the form of the material from its original flat condition, producing objects in which the various surfaces are not in the same plane. The last mentioned main division often includes also the characteristics of the first; that is, some shaping dies are, for instance, a combination of cutting and shaping dies, the blank for the work to be shaped or formed being first cut out to the required outline from the stock, and then shaped to the desired form.

The main classes of dies, as will be recognized, are based on the *use* of the dies. The first of the classes mentioned, cutting dies, may, however, be further subdivided according to the *construction* of the various types of dies in this class. We then distinguish between four distinct types, *plain blanking dies*, *follow dies*, *gang dies*, and *compound dies*.

Plain blanking dies are the simplest of all types of dies, and are used to cut out plain, flat pieces of stock having, in general, no perforations, the work being turned out complete at one stroke of the press.

Follow dies, not infrequently also termed tandem dies, are used for work which must be cut out from the stock to required shape, and at the same time be provided with holes or perforations of any kind. The principle of the follow die is that while one part of the die punches the hole in the stock, another part punches out the work at a place where at a former stroke a hole has already been punched, so that a completed article results from each stroke of the press, but, in reality, two operations have been performed on the work before completion. The follow die cannot be depended upon to turn out very

accurate work, because it depends largely on the skill and care of the operator for the production of duplicate work. In both the plain blanking and the follow dies, the punch, or upper member, and the die, or lower member, of the complete tool, are distinct elements, the work being cut out or perforated by the entering of the punch into the holes provided for it in the die.

Gang dies are used when several blanks are punched out simultaneously from the stock. The advantage of the gang die over the plain blanking die is the saving of time.

Compound dies differ from plain blanking and gang dies in that the simple punch and die elements are not separated, one in the upper and one in the lower half of the complete tool, but these elements are combined so that both the upper and the lower part contain each a punch and a die. The faces of both punches, dies and strippers are normally held at the same level, and the strippers are spring supported so as to give way when the stock is inserted between the faces, and the press is in action. The springs are so adjusted that they are strong enough to overcome the cutting resistance of the stock, after which they will be compressed until the ram reaches the end of its stroke. A compound die produces more accurate work than the three types previously referred to, for the reason that all operations are carried out simultaneously at one stroke, while the stock is firmly held between the spring-supported opposing die faces. The disadvantage of the ordinary compound die is the difficulty encountered in "setting up," and the complexity of the design, which usually requires more or less frequent repairs.

The second main division of dies, the shaping dies, cannot be subdivided according to the construction of the dies in the same manner as the cutting dies. Shaping dies are usually designed more or less on the compound principle, outlined above, but owing to the great variety of work performed in these dies, the designs vary too greatly for a classification on the basis of constructional features. They may, however, be divided into sub-classes according to the general use to which they are put. We would then distinguish these four main subdivisions: *bending dies*, *forming dies*, *drawing dies*, and *curling dies*.

Bending dies are used when part of the surface of a piece of work is pushed from its original plane into a new shape in such a manner that the bent work does not form a closed curve.

Forming dies are used when the blank is required to be formed into a hollow shape, by being pushed into a cavity in the die.

Drawing dies are used for the same purpose as forming dies, but the process differs in that the outer portion of the flat blank to be formed is confined between two rigid flat surfaces, so that, when drawn radially inward from between them, no wrinkles can form.

Curling dies are used for bending over the ends or edges of the work into a circular cross section, like the turning over of the edges of hollow objects of sheet metal, etc.

Finally, we must mention the sub-press die, which, however, cannot be defined as a special class of die, but merely as a principle on which

all the different classes of dies, cutting as well as shaping dies, may be worked. The sub-press principle is simply that the upper and lower portion of the die, the punch and die, are combined into one unit by guide rods fastened into the lower part of the die and extending through holes in the upper part, or by some other provision for guiding. This construction permits of a high degree of accuracy eliminates the necessity of lining up the punch and the die each time they are set up on the press, and thus saves a great deal of time and cost.

In the following, we shall, however, deal only with the simpler forms of cutting dies, plain blanking and gang dies, except in Chapter VI, where reference will also be made to some of the more complicated types of dies.

CHAPTER I

METHOD OF MAKING BLANKING DIES*

From a mechanical standpoint it can truthfully be said that we are living in an age of dies. Never before has the industrial world made use of the punch and die as it is doing to-day. And no wonder; for this useful tool in all its different phases has proved beyond all reason-

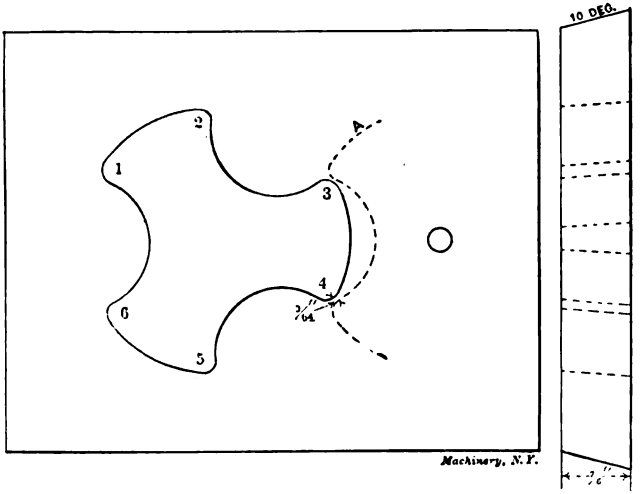

Fig. 1. Die used as Example in Illustrating Principles of Making Blanking Dies

able doubt that it can turn out more work in less time than the combined efforts of a room full of milling machines, shapers, and drill presses. To those who are unfamiliar with the die and its work the above may not appear feasible; but one has only to visit a modern

* MACHINERY, June, 1906.

sheet metal factory to be convinced of the surprising rapidity with which the power press with its punches and dies will turn out not only work of all kinds of shapes and sizes, but accurate work as well.

Of the many different kinds of dies in use, the blanking die is probably the most widely employed. The reason for this is that almost all work that requires the use of various other kinds of dies has its beginning with the blanking die; for it is this die that cuts the work from the flat stock before it is completed by the other dies. In making the blanking die there are a few essential points to be taken into consideration, among which are the following:

1. Use good tool steel of a sufficient length, width, and thickness to enable the die to hold its own.

2. In laying out the die, care should be taken that as little of the stock as possible is left over, as waste, in cutting out the blanks.

3. Be sure not only that the die has the proper amount of clearance (which should be no more than two degrees and no less than one degree) but also that the clearance is filed *straight*, so as to enable the blanks to readily drop through.

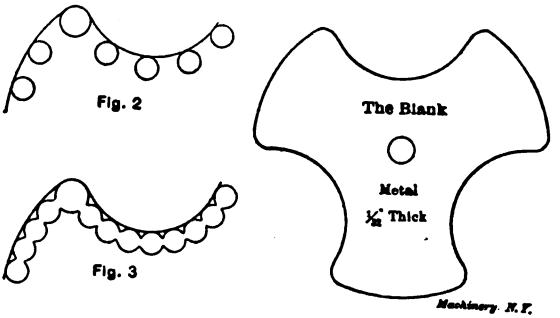

Figs. 2 and 3. Method of Removing Surplus Stock or "Core"

4. In working out the die, machine out as much as possible; don't let the file do it all.

5. In hardening the die, do not overheat it, as the cutting edge of a die that has been overheated will not stand up to the work, and requires so much sharpening in order to produce perfect blanks, that at its best it is nothing more than a nuisance.

In laying out the blanking die, the face of the die is first polished smooth and drawn to a blue color by heating. This gives better satisfaction by far than using coloring acid, for it gives a clear white line on a dark surface to work to, and is easier on the eyes, particularly when working by artificial light as is often necessary. When the die to be laid out is a blanking and piercing die, allowance of 3/64 inch must be made for the "bridge," *i. e.*, the narrow strip of metal that separates the holes in the stock from which blanks have already been cut. Fig. 1 shows how this is done; the dotted line *A* is drawn merely to show how the die is laid out.

After the die is laid out it is ready to be worked out. Now there

are several different ways of working out the surplus stock in a die of this kind. One is to drill say a half-inch hole at a safe distance from the line, and then fasten the die in a diemaker's milling machine and mill out the stock close to the line with a taper milling cutter, which gives the die the necessary clearance, thereby saving considerable time when filing out the die.

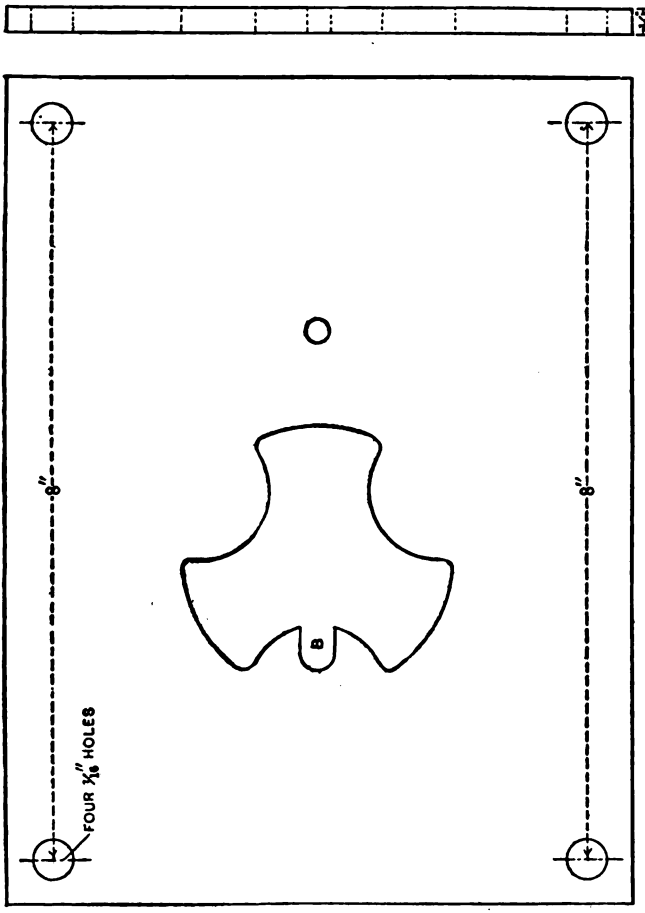

Fig. 4. Stripper Plate

Another method which is most commonly used, is to drill out the surplus stock on a drill press, after the manner shown in Figs. 2 and 3, which is done as follows: The six holes for the corners numbered 1, 2, 3, 4, 5, 6, Fig. 1, are first drilled and reamed taper, after which the other holes are drilled. These holes are drilled an even distance apart, and must therefore be spaced off, and then spotted with a prick punch before they are drilled. The best way to do this is to first

scribe an inside line at a distance from the outside line equal to one-half the diameter of the holes to be drilled, then space off, and spot. In spacing off, do not use dividers, but use a double prick punch. Using a pair of dividers requires too much time, besides the points get dull quickly enough without using them when it is unnecessary.

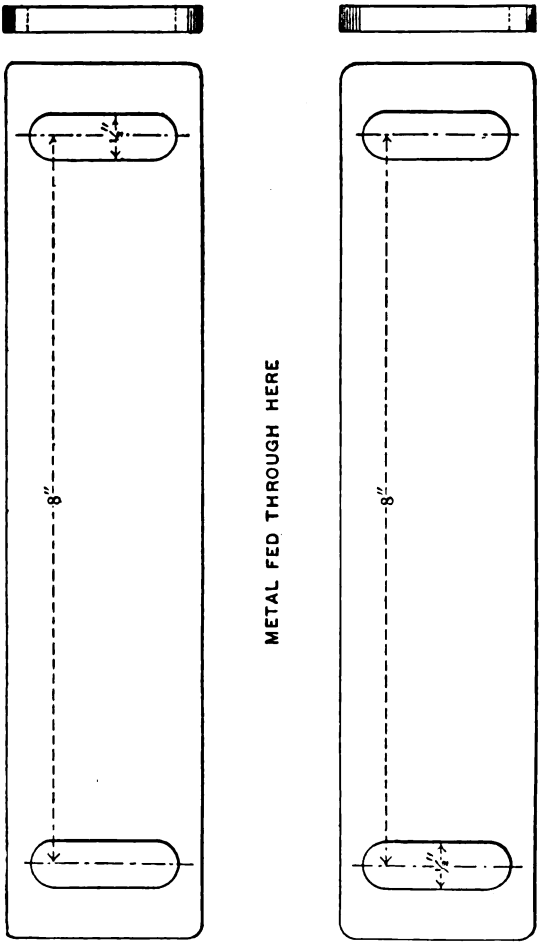

Fig. 5. Gage Plates

After the centers have been lightly spotted with the double prick punch, use an ordinary prick punch and make the spots a trifle deeper, so that the drill will more easily take hold.

In drilling, use the method shown in Figs. 2 and 3, for in this way the holes can be drilled closer together, thereby making it easier to get rid of the surplus stock and saving the time of broaching out the webs. The die blank should be slightly tipped by placing a narrow

strip of flat stock under the edge of same, as shown in Fig. 6, when the die is being drilled. This is done to give the necessary clearance, and does away with that time-killing operation of reaming the holes with a taper reamer from the back after they are drilled. After the surplus stock is gotten rid of, the die is finished by filing, using a coarse file to begin with, and finishing with a smooth one.

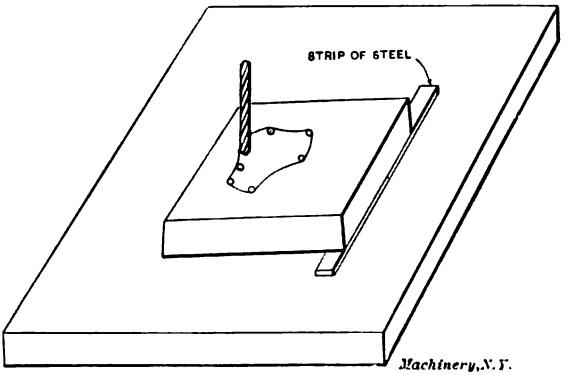

Fig. 6. Method of Obtaining Clearance when Drilling out the "Core"

Usually the die is made to fit a sample blank or a templet. This is done by entering the templet from the back as far as it will go after the die has been filed to the inside of the line. A lead pencil is then used to mark those parts of the die where the templet bears.

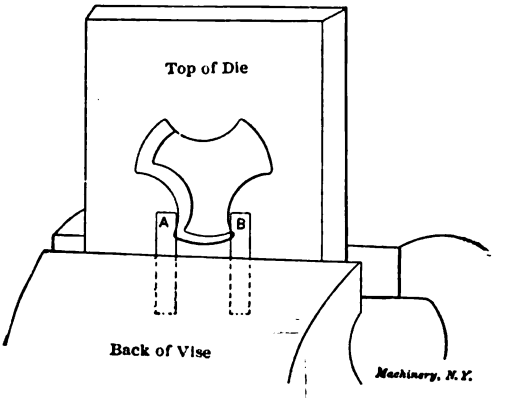

Fig. 7. Guarding the Corners in Filing the Die

The templet is then removed, the pencil marks filed out, the templet again entered and so on, until it is worked through the die. In filing out a die of this kind, where there is any danger of injuring that part of the die which has already been finished, use two strips of sheet steel, *A* and *B*, in the manner shown in Fig. 7, the round corners which are already finished being thus protected from the edges of the file.

In hardening the die, heat it to a cherry red, preferably in a gas furnace or a clean charcoal fire, and dip endwise into the solution used for hardening. When the die is sufficiently cold so that it can be taken hold of by the hands, withdraw it quickly and place it on the fire until it has become so warm that it will make water sizzle when dropped thereon; then immerse once more until cold. This is done to relieve the internal strains caused by hardening, and acts as a preventive to cracking. The face of the die is now polished, and the temper drawn to a light straw color, after which the die is allowed to cool of its own accord in oil. When cool, the die is ground on the top and bottom on a surface grinder, and if required it is lapped to size, which completes the operations.

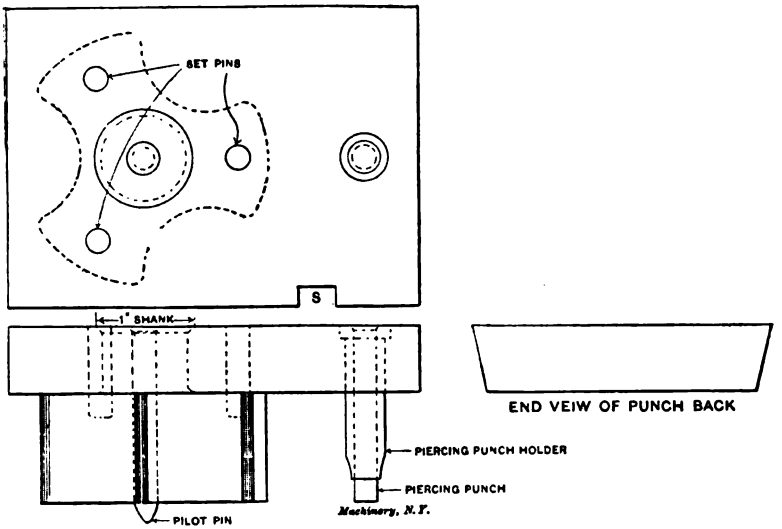

Fig. 8. Punch used with Die in Fig. 1

The punch is made after the manner shown in Fig. 8, and needs very little explanation. The dovetail punch back shown holds the punches in position, and is securely held in the press by the aid of a key. The slot *S* forms a position stop by engaging in a stud in the dovetail channel in the ram of the press, thereby eliminating the necessity of again resetting the tools in case the punch requires sharpening. The blanking punch is made from a tool steel forging, and is machined and sheared through the die in the usual manner. The one-inch shank is made a good driving fit in the punch back, and is upset as shown after the punch is driven in. The three set pins help to more securely hold the punch in position, and prevent it from turning.

The piercing punch is held in position by the piercing punch holder, which is driven tight in the punch back. The piercing punch is lightly driven in, and is made of drill rod, and can be very readily replaced

in case it is broken. The pilot pin is also made of drill rod, and can be very easily and quickly taken out when the punch requires sharpening.

The stripper and gage plates for this die are shown in Figs. 4 and 5. They are fastened by four 7/16 cap-screws to the die bed, used for holding the die in position when in use, and form, without doubt, not only the best, but by far the cheapest of the various methods employed for this purpose. While this method cannot be used on all kinds of blanking dies, it can, however, be used with the best of results on dies similar to the one described, and eliminates the unnecessary operation of drilling and tapping holes in the die itself to hold the stripper and gage plates in position. Not only that, but the gage plates as shown are used in connection with many other dies of a similar nature, thereby doing away with the necessity of having a set of gage plates for every die, as would otherwise be the case.

As the illustrations speak for themselves, no more explanation seems necessary, except perhaps that the slot *B* shown in Fig. 4 is to allow for an automatic finger to act as a position stop for the metal when it is run through.

CHAPTER II

BLANKING AND PIERCING DIES FOR WASHERS*

One of the simplest dies to make, coming under the head of blanking and piercing dies, is perhaps the die for blanking and piercing brass washers. The reason for this is that in making this die, the file and vise are not used; the construction and shape of this die are such as to allow it to be made by machinery. To lay out a single washer die is a very easy matter, but to lay out a die for cutting two or more washers at one time, so as to cut the greatest amount of blanks from the least amount of stock, is not understood as it should be. One of the reasons for this is that it is the custom in some shops to have the foreman, or some one else appointed by him, lay out all the dies before they are given to the diemaker to work out.

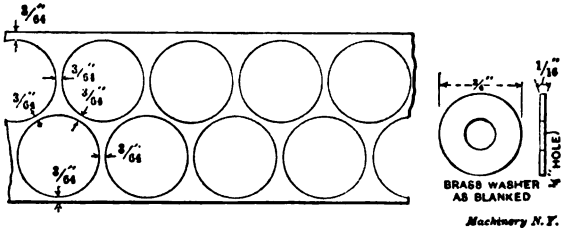

Fig. 9. Stock after having been run through the Die in Fig. 10, and Washer made

In laying out a washer die for blanking two or more washers at one time, one of the main points to be remembered is that all the holes from which the blanking and piercing are done must be laid out in an exact relation to each other, so as to eliminate the possibility of "running in" (*i. e.*, cutting imperfect, or half blanks, by cutting into that part of the metal from which blanks have already been cut). The required amount of blanks must also be considered, for it sometimes happens that the amount wanted does not warrant the making of a die that will cut more than one at a time.

Fig. 10 shows how a die is laid out for blanking and piercing two washers at one time, so as to utilize as much of the metal as possible. As shown, the ¾-inch holes marked *C* and *D* are the blanking part of the die, while the ¼-inch holes *A* and *B* are the piercing part. The distance between the center of *C* and *A* is 51/64 inch, as is also the distance between *D* and *B*. By referring to Fig. 9, which shows a section of the stock after it has been run through this die, it will be seen that there is a narrow margin of 3/64 inch of metal, known as "the bridge," between the holes. In laying out the die this margin must be taken into consideration, which is done in this manner: diameter of washer to be cut plus bridge equals distance from center

* MACHINERY, October, 1906.

to center, *viz.*, 3/4 + 3/64 = 51/64. The dotted circle shows that the die is laid out so that one washer is skipped in running the metal through at the start. This is done in order to make the die a substantial and strong one. It can be very readily seen that if the circle *E* were the blanking part instead of *D*, the die would be a frail one, and would not be strong enough for the work for which it is intended.

Another important point in laying out a die of this kind is to lay

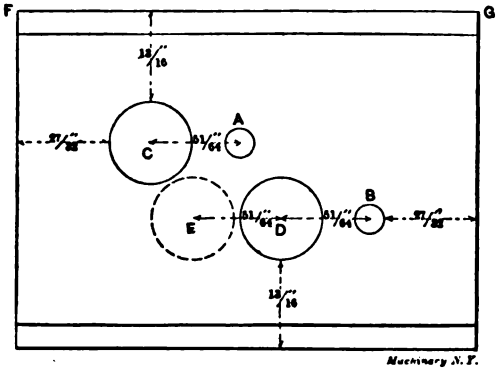

Fig. 10. Plan View of Die for Punching Two Washers Simultaneously

out the die "central," *i. e.*, laying out the die so that when it is keyed in position ready for use in the center of the die bed, it will not have to be shifted to the right or left side in order to make it line up with the punch. It may not be amiss to say in connection with the above that the punch back which holds the blanking and piercing punches in position should also be laid out "central"; this will be more fully described later on.

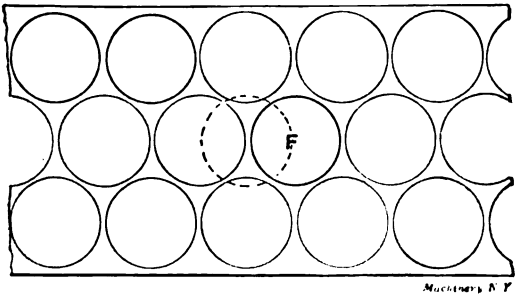

Fig. 11. Stock after having been run through Die in Fig. 12

Fig. 12 shows the layout for blanking and piercing three washers at one time, and hardly needs any explanation; the explanation given in connection with Fig. 10 sufficiently explains Fig. 12.

Fig. 11 shows a section of the stock after it has been run through this die. It can be seen that the holes match in very close together, and that very little stock is left. It is also seen that the three holes punched are not in a straight line, so far as the width of the metal is

concerned. This is done in order to save metal; the dotted circle *F* is merely drawn to show that wider metal would have to be used if the holes were in a straight line.

Fig. 13 shows the plan of a die for blanking and piercing eight washers at one time. The parts which are numbered are the blanking parts, while the parts that are lettered are the piercing parts of the die. This die is laid out similarly to Fig. 12, with the exception that there is provision for eight blanks instead of for three. Fig. 14 shows a section of stock after it has been run through this die. To give a better idea as to how the blanks are punched out in the manner shown, the sixteen holes in the metal from which blanks have been cut are numbered and lettered the same as the die. It should be understood

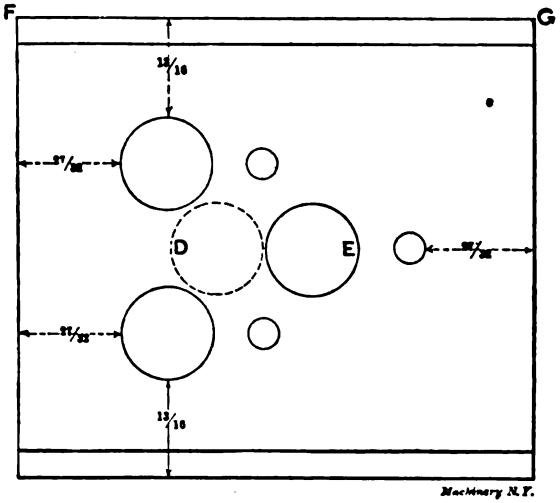

Fig. 12. Plan View of Die for Punching Three Washers Simultaneously

that the metal is fed through in the usual way, which is from right to left, and that the ¼-inch holes are first pierced out, before the ¾-inch blanks are cut.

By referring again to Fig. 13, the lay-out for cutting two, three, four five, six and seven blanks can be determined. The parts numbered and lettered 1—*A* and 5—*E* are the lay-out for two blanks. For three blanks: 1—*A*, 2—*B*, and 5—*E*. For four blanks: 1—*A*, 2—*B*, 5—*E*, and 6—*F*. For five blanks: 1—*A*, 2—*B*, 3—*C*, 5—*E*, and 6—*F*. For six blanks: 1—*A*, 2—*B*, 3—*C*, 5—*E*, 6—*F*, and 7—*G*. For seven blanks: 1—*A*, 2—*B*, 3—*C*, 4—*D*, 5—*E*, 6—*F*, and 7—*G*.

The die bed used for holding the die in Fig. 13 in position when in use should have its dovetail channel running in the direction *KL*, while the dovetail channel for the dies shown in Fig. 10 and 12 should run in the direction *FG*. The reason for this is that a longer bearing surface for the dovetail is obtainable by such an arrangement.

It should be remembered that all holes in dies of this kind are lapped or ground to size after hardening; they should be perfectly round and have 1 degree clearance. In some shops the holes are left straight for ¼ inch, and then tapered off 2 degrees.

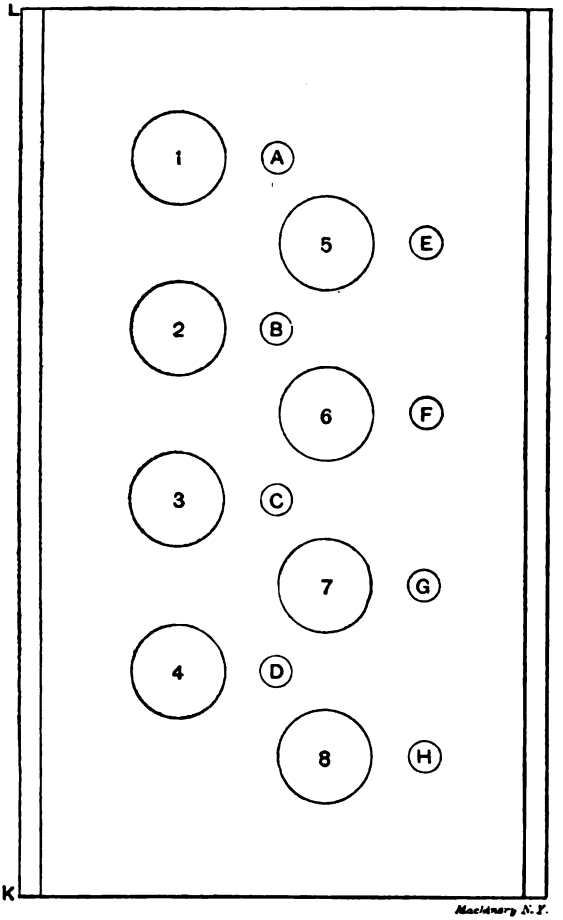

Fig. 13. Plan View of Die for Punching Eight Washers Simultaneously

An important point to bear in mind in making the punch is to have a perfect "line-up." It may not be generally known, but it is nevertheless a fact, that blanking tools that blank, or that pierce and blank two or more blanks at one time, will run longer without sharpening, cut cleaner blanks, and, in fact, give all around better results, if the punches are a perfect "line-up" with the die, than if they are lined up in the so-called "near enough" way. A perfect line-up, as referred to in the above, is a line-up that will allow a punch that consists of two

or more punches to enter the die the same as if the punch consisted of just one punch. The advantage of the perfect line-up over the other is that when in use the punches do not come in too close contact with the edges of the die. They enter the die, but do not bear against the edges in such a way as to dull the die, or round over the sharp cutting edge of the punch.

A punch that is almost a perfect line-up will enter the die, but it requires more force to make it enter. Why? Because in entering, one of the punches, for instance, rubs hard against the side of the die, and

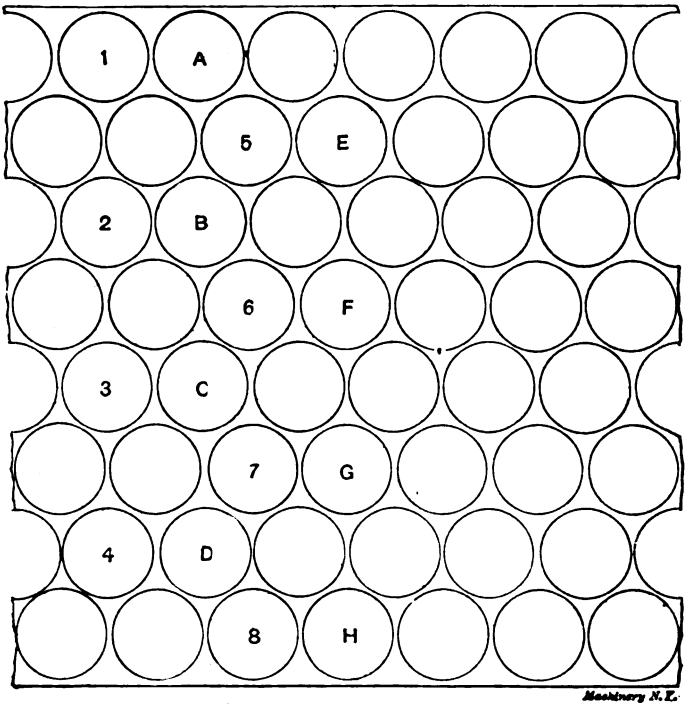

Fig. 14. Stock after having been run through the Die in Fig. 13

if set up in the press and allowed to run, that punch, no matter how small, will dull the edges of the die as well as the edges of the punch itself. The result is that the press must stand idle while the tools are being sharpened, and if the real cause of the trouble is not remedied, it is "the same old thing" over and over again.

Just a few words in regard to making the punch. In making the punch, care should be taken that it fits into the die not too loose, nor too tight. The blanking punches are hardened and ground to size. The taper shank is finished to size after hardening, so that when the punches are driven into the punch back they will stand straight and not lean to one side.

In laying out the dovetail punch back, first clamp the back central on the face of the die. This is done so that when the punches are driven in position in the punch back, and set central in the ram of the press, ready to be used, no shifting is required in order to make the punch line up with the die, which is keyed in the center of the die bed. After clamping the punch back in this position, the blanking part of the die nearest the end is scribed on the face of the punch back. Do not scribe all the holes and rely upon finding the center of each circle thus scribed with a pair of dividers, and then true up these centers on a faceplate in order to get a perfect line-up; this method increases the chances of error, especially when there are six or eight

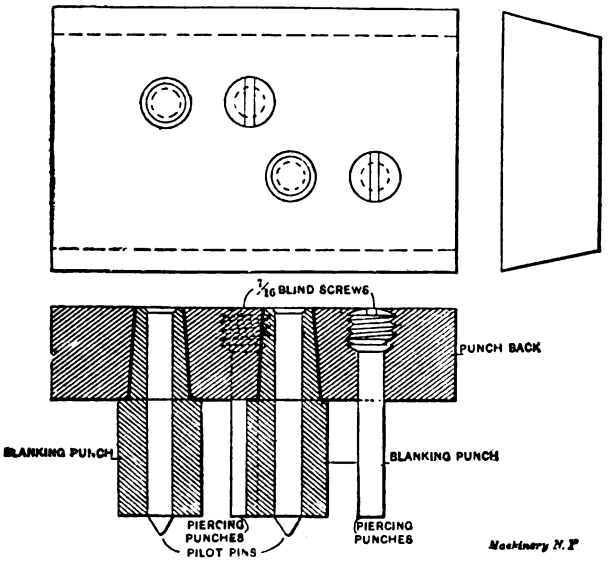

Fig. 15. Punch Back, with Punches Inserted

punches to be set in position. A better way is to scribe one circle as stated above, and remove the punch back from the face of the die; find the center of the circle scribed; true up this center, and drill and bore out the hole to fit the taper shank of the blanking punch.

Fig. 15 shows how a punch of this kind is made. The punch as shown is used with the die shown in Fig. 10. After the hole is bored to size, the already finished blanking punch is driven in tight in the manner shown. Two narrow parallels, say ½ × ¾ inch, are now laid on the face of the punch back, and the blanking part of the die that corresponds with the punch driven in is slipped over the same, until the face of the blanking die rests upon these parallels, after which the die is clamped tightly thereon. The next hole is now trued up with a test indicator until the hole runs dead true. The die is then removed, the hole for the taper shank is worked out, and the

punch driven in. Where there are more punches to be set in, the same method is used until they are all in position. This insures a perfect line up, providing that ordinary care and precaution has been used in doing the work. In boring out these holes it is best to use a bolster having a dovetail channel, and to hold the punch back in position with a key. This is better than using straps to fasten the punch back to the faceplate, as the straps are likely to interfere with the parallels and the die, when locating the exact position for the holes to be bored.

In locating the position for the piercing punches, it sometimes happens that the holes are so small that they cannot be bored. The holes are then transferred by a drill that runs true and is the same size as the holes in the piercing die, the die being used, so to speak, as a drill jig.

Fig. 15 shows how the piercing punches are held in position. The punches are made of drill rod, and are prevented from pushing back by hardened blind screws as shown. If thin, soft metal is used, the method for holding the two pilot pins in position shown in the previous chapter may be employed. When the piercing punches are made and held in position as shown in Fig. 15, a spring stripper is sometimes used, and is fastened to the punch back, and the holes for the piercing punches in this stripper are made a sliding fit, in order to prevent the punches from springing or shearing. When the ordinary form of stripper is used, the piercing holes are also made a good sliding fit.

CHAPTER III

MAKING BLANKING DIES TO CUT STOCK ECONOMICALLY*

A most important point for the diemaker to bear in mind in making blanking dies for odd shapes is to lay them out so that the minimum amount of metal will be converted into scrap. In fact, hardly too much stress can be laid upon this one point alone. It is an easy matter to waste a considerable percentage of the stock by lay-outs which may *appear* to be fairly economical. The diemaker should make a careful study of the most economical relation of blanking cuts to one another and to the stock. It is the object of the present chapter to point out by actual examples how stock can be saved which may be converted into scrap if the diemaker is not constantly watching out for possible economies. As an illustration, it sometimes happens that by laying out the dies so that the blanks are cut from the strip at an angle of 45 degrees, as shown in Fig. 17, a considerable economy of metal can be effected over a right-angle arrangement, that is, one in which the dies are set so as to cut the blanks straight across the strip. The angular location permits the use of narrower stock and

* MACHINERY, February, 1907.

materially reduces the amount of scrap metal. Fig. 16 shows the plan of the die, and needs little or no explanation, as the manner in which it is laid out is obvious; the plan of the strip shown in Fig. 17 also clearly shows how the die is laid out.

Another method that is often used to save metal is that shown in Figs. 19 and 20. This method is used where the required amount of

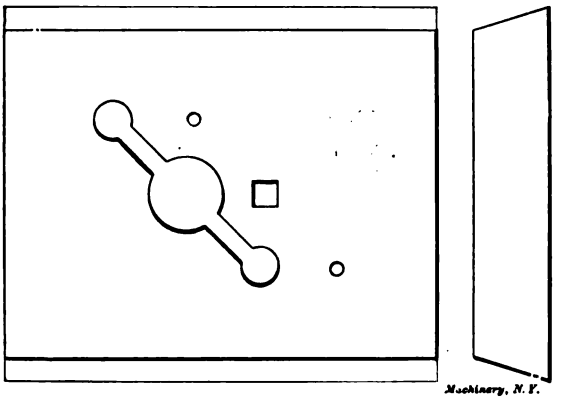

Fig. 16. Example of Blanking Die

blanks does not warrant the making of a double blanking die; also when, unavoidably, there is a considerable amount of stock between the blanks after the strip has been run through as shown at *A* in Fig. 19. To save this metal the strip is again run through in a reverse order after the manner shown in Fig. 20, thereby using up as much of the metal as it is possible to do. Besides blanking and piercing

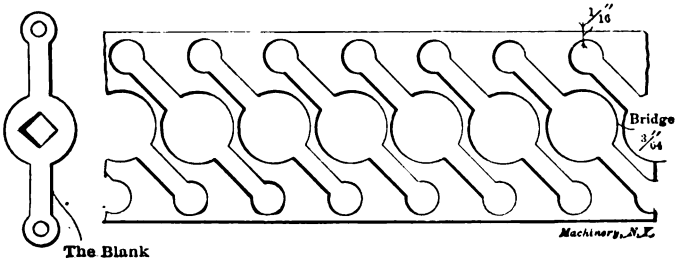

Fig. 17. Section of Stock after having been run through Die in Fig. 16

the blank when running the metal through the first time, the holes numbered 4, 5, and 6, Fig. 18, are also pierced. This is done for the reason that when the metal is run through the second time it prevents cutting of "half blanks" by "running in," or, in other words, the liability of cutting imperfect blanks by cutting into that part of the metal from which blanks have already been cut. This guiding action is effected by three pilot pins in the blanking punch (not shown) which engage the three pierced holes made when the strip was

run through the first time. The pilot pins engaging with the pierced holes cause the second lot of blanks to be cut centrally with the holes, and also to be accurately centered between the portions of stock from which the blanks have already been cut. When this die is in

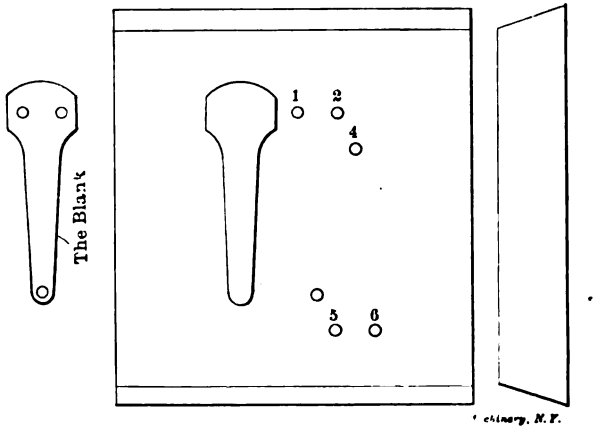

Fig. 18. Another Example of Blanking Die

use, the metal is run through in the usual way from right to left until half of the required amount of blanks is cut, after which the piercing punches for the holes are taken out and the metal is run through again and the other half of the required amount of blanks is cut.

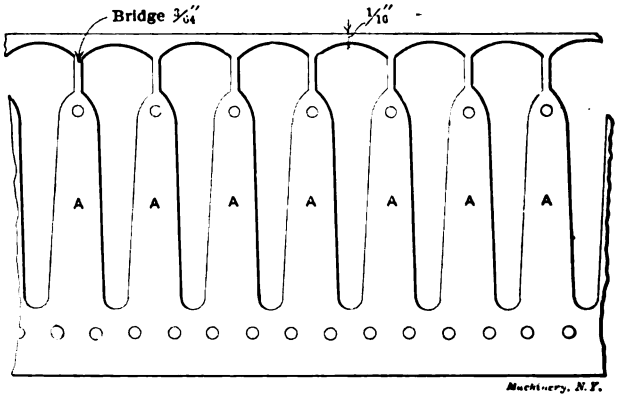

Fig. 19. Stock after having been run once through Die in Fig. 18

In laying out this die, which is done after the manner shown in Fig. 28, the line *A* is used as the center line for the piercing holes numbered 1 and 2 in Fig. 18, and the line *B* is the center line of the blanking part of the die. The line *C* is the center line that shows the center

of the next blank to be cut and is laid out 53/64 inch from the line *B*. This dimension is fixed by the fact that the widest part of the blank is 25/32 inch, and the bridge between the blanks is 3/64 inch, the sum of which equals the distance from center to center of adjacent blanks. The line *D* is the center line for the blank *C*, Fig. 20, which is cut when the metal is run through the second time, and is made at 0.414 inch or one-half of 53/64 from the line *C*, Fig. 28, inasmuch as the blank is cut centrally between that part of the metal from which the blanks *A* and *B*, Fig. 20, are cut.

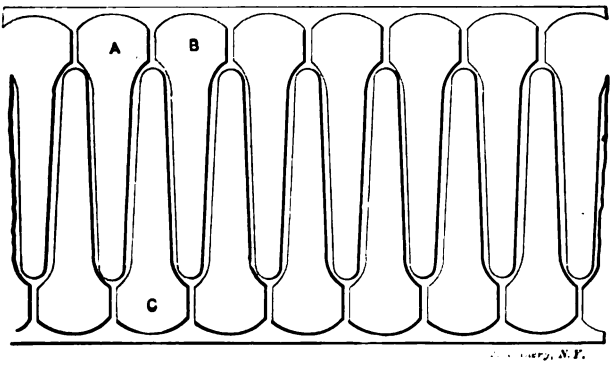

Fig. 20. Stock after having been run twice through Die in Fig. 18

Fig. 21 shows a double die for blanking and piercing brass, producing the shape shown in the sketch at the left; it is laid out so as to save as much of the metal as is practically possible without added expense so far as the operation of blanking and piercing is concerned. By referring to Figs. 22 and 23 it can be seen that the strip of metal from which the blanks are cut is run through a second time for reasons that will be given. One reason is that wider metal can

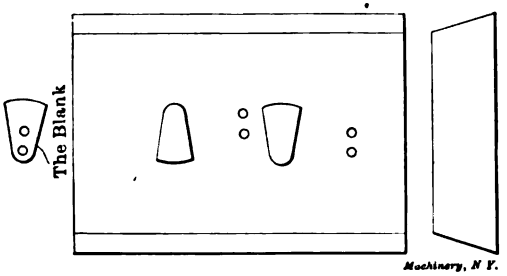

Fig. 21. A Third Example of Blanking Die

be used by doing this, which in itself is a saving so far as the cost of metal is concerned. Wide brass can be bought at a lower price per pound than narrow brass; the other reason is that a strip of metal 1/16 inch wide and as long as the entire length of the strip is saved

on every strip that is run through. If narrow metal were used, there would be waste of ⅛ inch of metal (*i. e.*, 1/16 inch on each side) of every strip run through, and on two strips from which no more blanks could be cut than from the wider strip shown in Fig. 23, there

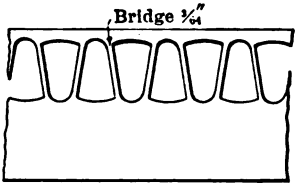

Fig. 22. Stock after having been run through Die in Fig. 21 once

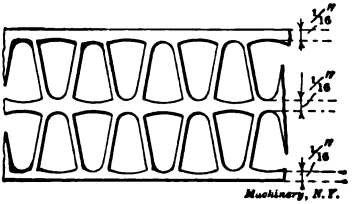

Fig. 23. Stock having twice been run through Die in Fig. 21

would be a waste of ¼ inch of metal. On the other hand, by using wide metal the waste would be only 3/16 inch, as indicated in the cut. Fig. 29 shows how this die is laid out, and should be sufficiently clear to explain itself.

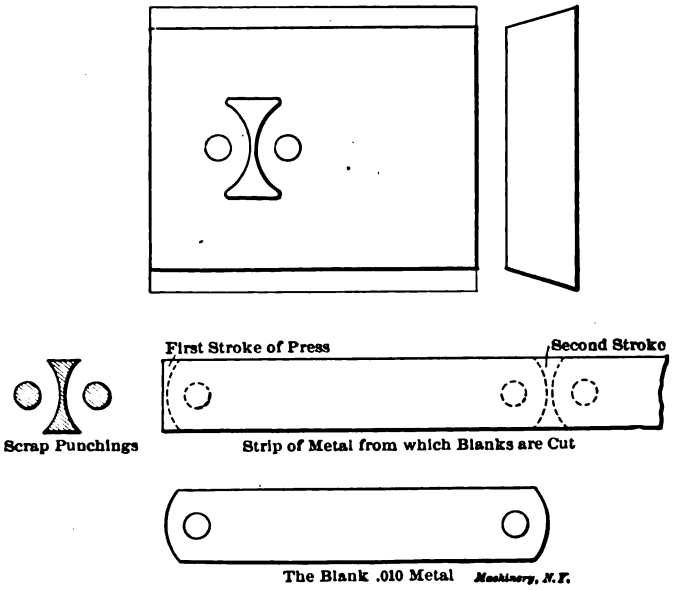

Fig. 24. Blanking Die for Producing Links

To fully understand the manner in which the metal is gradually worked up after each stroke of the press, short sections are shown in Fig. 25. At the first stroke four holes are pierced and two plain blanks —with no holes—*A A* are cut out. At the second stroke there are also four holes pierced and the two blanks *B B*, for which the holes were pierced at the previous stroke, are cut. At the third and fourth strokes

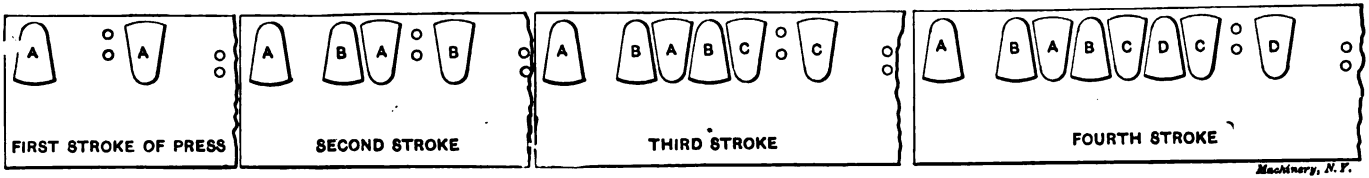

Fig. 25. Appearance of Stock after each Successive Stroke of the Press

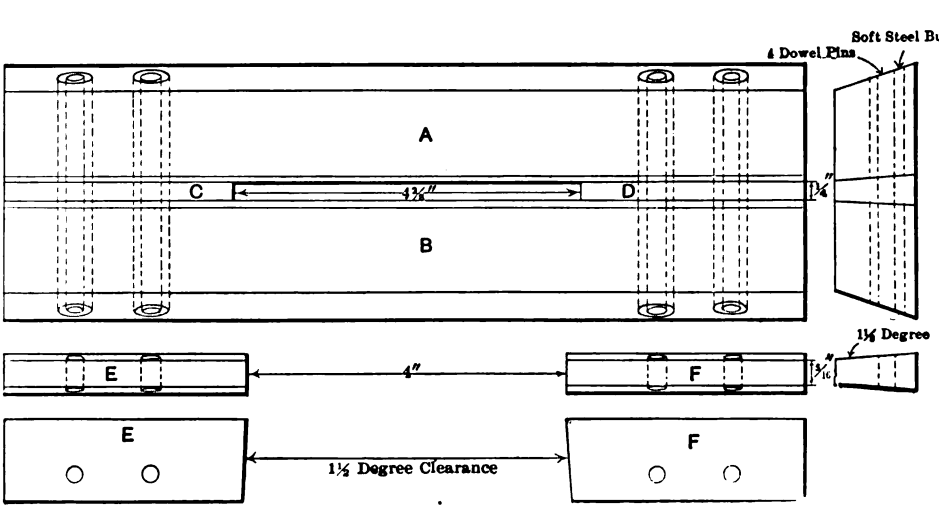

Fig. 26. Die with Interchangeable Parts, Permitting Two Sizes of Blanks to be Punched by Changing the Center Pieces only

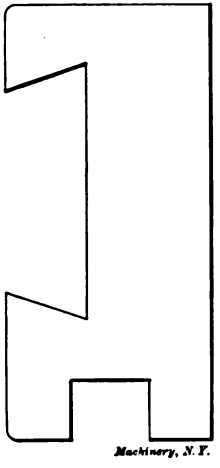

Fig. 27. Gage for Planing Die Blanks

the holes begin to match in with each other, as shown, so that when the metal is run through it will look like the strip shown in Fig 22. It should be borne in mind that four holes are pierced and two blanks are cut at each stroke of the press; also that the metal is fed after each stroke a distance equal to the distance from the center of *A* to the center of *B*, as indicated in the strip marked "second stroke," Fig. 25, and which is 25/32 inch (see Fig. 29). By way of further explanation it may not be amiss to state that the distances from the center of *A* to *B*, *B* to *C*, *C* to *D*, and *D* to *C*, as shown in the strip marked "fourth stroke" are each 25/64 inch, or half of 25/32 inch.

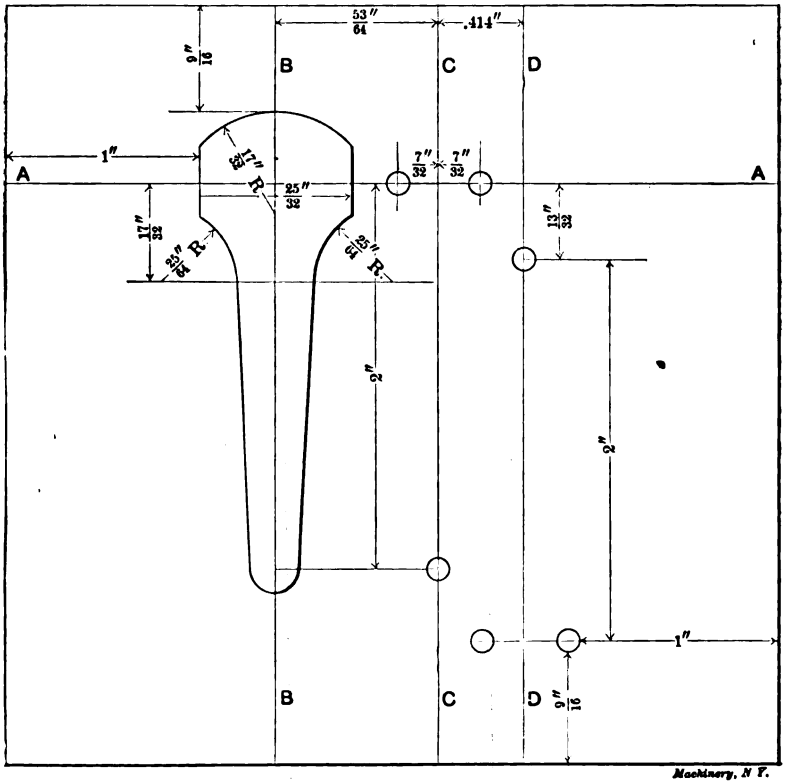

Fig. 28. Layout of Die Shown in Fig. 18

While the dies shown in Figs. 24 and 30 are commonly known, it may not be out of place to say a few words with reference to them, as they form an important part in the economical production of sheet metal goods. The first, or Fig. 24, shows a die that is used to produce, from narrow ribbon, a long blank with rounded ends and with a hole pierced in each end. The principal feature of this style of die is that there is very little waste of material in the production of the

blanks, as will be noted from the sketch of the scrap punchings shown at the left, and another feature is that by the aid of an adjustable stop, not shown, almost any length of blank can be made without alter-

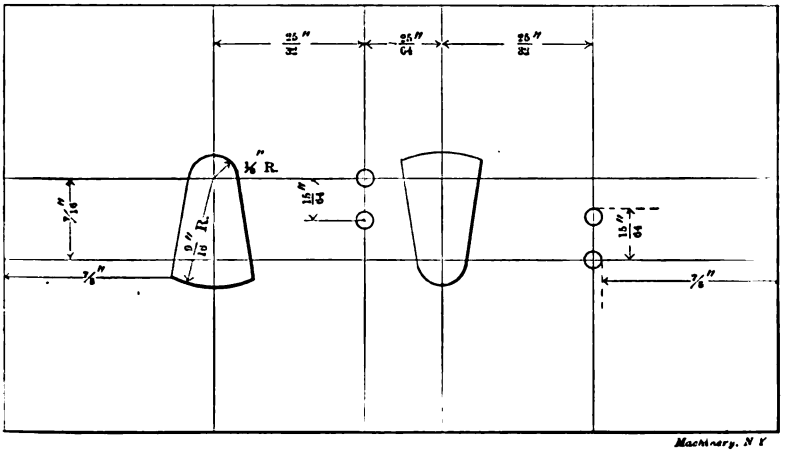

Fig. 29. Layout of Die Shown in Fig. 21

ing or resetting the tools after they have been set up in the press. The working part of the die is laid out a little to the left of the center so as to give sufficient length for the gage plates which are fastened to

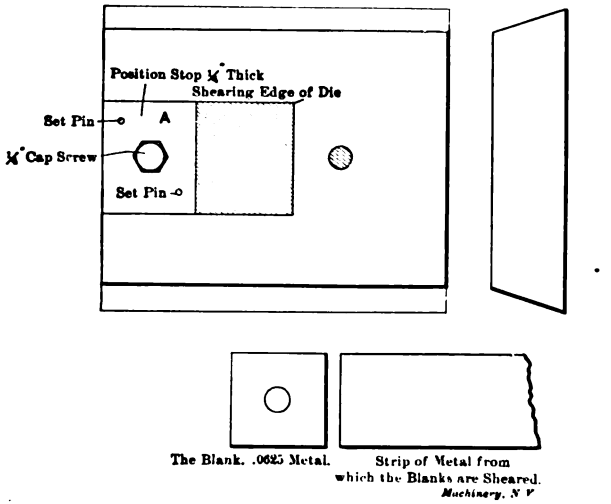

Fig. 30. Blanking Die for Square Washers. Shaded Portions in Die Indicate Parts punched out from Stock

the die by 1/4-inch cap-screws. These gage plates are used to keep the metal in position while it is being fed from right to left as the blanks are cut from the strip.

Fig. 30 is a combination piercing and shearing die and is used for producing the 1-inch square washer shown in the cut. The principal feature of this die is that there is no waste of metal in producing the blank, except, of course, the ¼-inch round punching taken from the center. The strip of metal in this case can be fed from right to left or front to back, as preferred.

CHAPTER IV

CONSTRUCTION OF SPLIT DIES*

A die of great importance in the production of sheet metal parts is the split die. There are two principal reasons for using the split die. One is that it sometimes happens that the blanks to be cut are of such a shape that the die can be more quickly and cheaply made by making a split die than by making a solid or one-piece die. The other reason is that when the required blank must be of accurate dimensions, and there is a chance of the solid die warping out of shape in hardening, the split die is preferred because it can be much more easily ground or lapped to shape.

Fig. 31 shows the manner in which the ordinary split die is usually made. After the die is worked out, it is hardened and ground on the top and bottom. The two sides *A* are then ground at right angles with the bottom.

The cutting parts of the die, *B*, are next ground at an angle of 1¼ degree with the bottom, so as to give the necessary clearance in order that the blanks may readily drop through. The key *D* is now set in place, and the die is keyed in the die bed by the aid of a taper key. The key *D* prevents the die from shifting endwise; the keyway should have rounded corners as shown, which not only give added strength, but also act as a preventive to cracking in hardening. The last operation is to grind the two circular holes. This is done by first lightly driving two pieces of brass or steel rod into the holes until they are flush with the face of the die. The exact centers are then laid out and spotted with a prick punch, care being taken so as to get the centers central with the sides *B*. The die is now fastened to the face-plate of a universal grinder, and the center mark is trued up with a test indicator until it runs exactly true. The brass rod piece is then driven out, and the hole ground to size, with 1½ degree taper for clearance. The other hole is next ground out in a similar manner, which completes the operations so far as the die is concerned. It often happens with a die of this kind that when it is placed in the die bed and the key driven in place, it will "close in." To overcome this, the die is relieved after the manner shown at *C*, which does not in any way prevent it from being securely held in place when in use.

* MACHINERY, March, 1907.

Fig. 26 shows a rather novel form of split die; this die with a slight change practically takes the place of two dies. It is used for piercing slots in brass plates. The size of the slot for one style of plate is 4⅜ inches long by ¼ inch wide; for the other plate the slot is 4 inches long by 5/16 inch wide. The cutting part of the die, shown in Fig. 26, is made in four sections, *A*, *B*, *C*, *D*. The cut fully explains itself and therefore needs no detailed explanation. It may not be out of place, however, to say that the soft steel bushings, as shown, are used to allow for the contortion of the parts *A* and *B* in hardening. It may be added that the four bushings shown in the piece *A* were driven in first; then solid pieces were driven in the part *B;* then the holes were drilled in these latter pieces, being transferred from the bushings in the part *A*. In Fig. 26 are also shown the parts used in connection with this die for piercing the 4 x 5/16-inch slot. These parts are made as shown, and are hardened only at the cutting ends. Outside of the fact that this style of die practically takes the place of

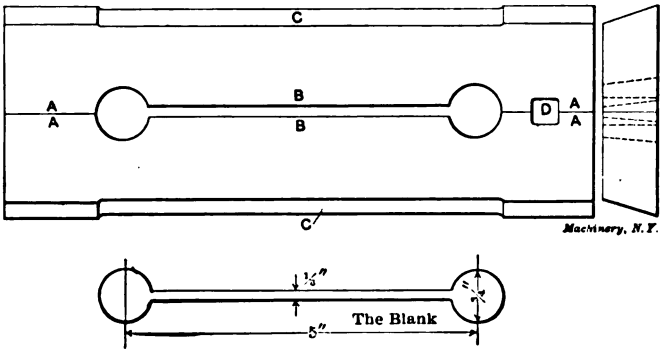

Fig. 31. Example of Split Die

two dies, there is still another feature in connection with it that will bear mentioning; there is no special or extra die bed required for this die when in use.

It may not be amiss at this time to say a few words with reference to die beds. (In some shops this part is called bolster, die block or die holder.) Perhaps the most commonly used and the best die bed for general use in the press room is the style of bed shown in Fig. 32. This die bed is principally used for the reason that the screws that fasten the die bed to the bed of the press do not have to be screwed entirely out, either in placing the die bed in the press or in taking it out, as the slots *C* and *D* are made at right angles with each other for just this reason.

The dovetail channel is planed so that when the die is keyed in position the center of the die is central with the slot *C*. The side of the die bed marked *A* is planed at an angle of 10 degrees, and is parallel with the slot *C*. The side marked *B* is planed at an angle of 13 degrees and is at an angle of 1 degree with the center line. The rea-

son for planing this side to an angle of 13 degrees instead of 10 is that the increased angle causes the die to lie flat, and prevents it from raising or tilting up in any way when the key is driven in.

In speaking of the key, it may well be added here that the taper-key method of holding blanking dies in the die bed is the best of the various methods which are generally used. The set-screw method is doubtless the poorest of all. The key as shown in Fig. 32 is driven in on the front side of the die bed. This is optional, however, as the practice differs. In some shops the key is driven in on the front side while in others it is driven in on the back.

Of late years there has been a tendency among large concerns to have all their die beds for the power press made from semi-steel castings, or of machine steel for certain classes of heavy work, instead of from gray iron as heretofore. This is being done because a gray

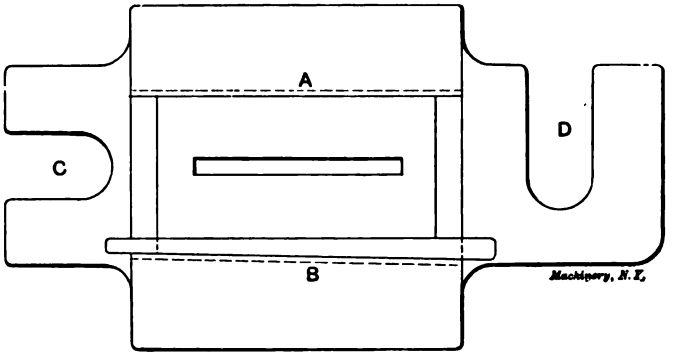

Fig. 32. Example of Die Bed

iron bed that is used day after day for holding dies for cutting heavy metal will not stand up during long and hard usage as it should. Past experience has proven that gray iron die beds in time become out of square; then, again, they sometimes crack. With the semi-steel, or the soft steel die bed, this does not happen. It has been found that semi-steel and machine steel die beds pay for themselves many times over.

In planing up the stock from which the blanking dies are sawed off before they are worked out, a gage similar to the one shown in Fig. 27 should be used for planing up the different widths of dies. In this way the dies will be of a uniform width and thickness, which makes it possible to have them interchangeable with the respective die beds for which they are used.

CHAPTER V

STOP-PINS FOR PRESS-WORK*

The stop-pin occupies a position of much importance among the accessories of the blanking die. Upon its design and adjustment depend both the quality and the quantity of the output of the press. Hence it is fitting that some attention be given to the consideration of it. By proper selection from the types to be described it is possible to secure a large output of blanks without recourse to more expensive apparatus. The several forms of stop-pins enumerated in the following list will be described in order, their proper uses being noted, together with their merits and faults: The plain fixed stop-pin; the bridge stop-pin; the simple latch; the spring toe latch; the side swing latch; the positive heel and toe latch; the gang starting device.

These devices are capable of giving, under the proper conditions, the maximum output of blanks. With the exception of the first, they can be used with either hand feed or automatic roll feed.

The ideal output of one blank for every stroke the press can make in a day is never realized, with single dies. The delays which arise

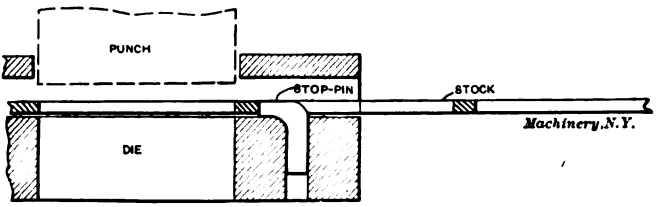

Fig. 33. A Plain Fixed Stop-pin

from so many sources have to be studied carefully and eliminated so far as they contribute to unnecessary expense. In addition to improper design and poor adjustment of the stop-pin, other causes of small output are: Lack of skill; inconvenient arrangement of the new stock, the blanks and the scrap; inefficient methods of oiling the stock; and poorly made or poorly designed dies. A skillful operator, if given a little freedom, will usually arrange the stock distribution quite well, but the design and adjustment of the dies and the stop-pin usually devolve upon the toolmaker.

Plain Fixed Stop-pin

The plain fixed stop-pin, which is the simplest form, is indicated in Fig. 33. With it the operators become so expert that they are able for several minutes at a time to utilize every stroke of a press making 150 revolutions per minute. This stop is best suited to the use of strip stock in simple dies, because a miss will then cause no serious

* MACHINERY, September, 1909.

delay. The time between finishing one strip and starting the next affords the necessary rest for the operator. The concentration required is very intense—especially for the novice. When but a few blanks are made from a die at one time, and when changes of dies are frequent, this simple stop-pin is the most economical. Of course, it would not be feasible to use this stop-pin for coiled stock and expect the operator to finish the coil without a rest or a miss. There is, however, one method of using this stop which permits of a maximum output: that is to allow no metal between the blanks. Then the stop-pin will ex-

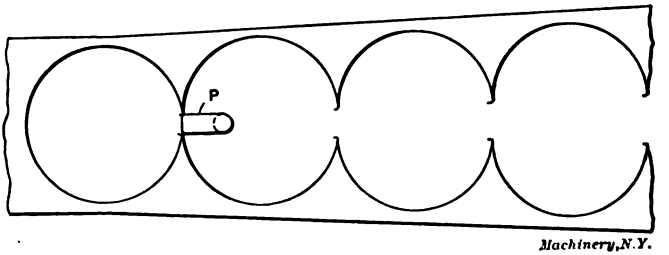

Fig. 34. Fixed Stop set close up to the Die so that there is no Stock between the Blanks

tend clear up to the die and be high enough so that the stock cannot jump it. Each blank will then part the scrap at the stop-pin and allow the stock to be pulled along to its next position. This arrangement is shown in Fig. 34, with the stock parting at the pin *P*. This method is widely used on simple work where the edge of the blank does not have to be perfectly uniform. Where the die has least to cut it will wear away most on account of the thin pieces of stock that crowd down between the punch and the die. Small drawn cups are

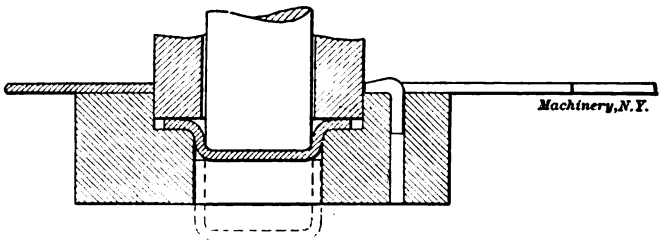

Fig. 35. Example of Work to which the Stop shown in Fig. 34 is adapted

made in this way. The blank is cut by the first punch and held by it while a second punch, within the first, draws the blank through another die and forms the cup. This is shown in Fig. 35. The stock feeds to the right and each cup, as formed, pushes the one ahead of it through the die as indicated by the dotted lines.

Bridge Stop-pin

The bridge stop-pin, shown in Fig. 36, is perhaps the most efficient and easiest to operate of all. It is also the simplest in design. The stop-pin *P* projects downward from a bridge *B* that extends over the

stock which is being fed to the left. Provision is made for the blank (or scrap, as the case may be) to fall out under the bridge. Its use is limited, however, to that class of work which cuts the stock clear across and uses its edges as part of the finished blank. As here shown, the scrap is being punched through the die, and the blank when cut falls down the inclined surface shown. When the blanks are simpler and have straight ends, the die may be so arranged that each stroke finishes two blanks, one being punched through the die and the other

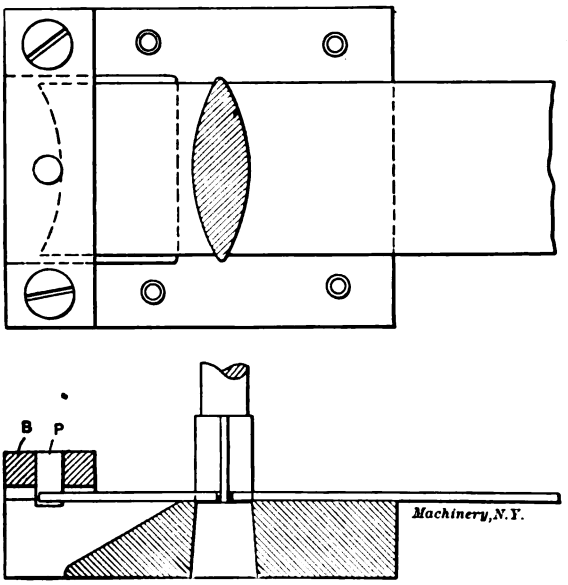

Fig. 36. The Bridge Stop-pin

falling outside down the incline. Little skill is required of the operator; he simply has to be sure to push the stock up to the stop-pin at each stroke.

The Simple Latch

The simple latch is shown in Fig. 37. It is suited for dies that have pilot-pins. The latch is lifted by the down stroke of the punch and is lowered again as the punch rises. Hence it is evident that, if used with dies without pilot-pins, the punch must reach the stock and hold it before the latch lifts. When its lifting is thus delayed it will lower before the punch withdraws from the stock and will fall in the same place it lifted from. The stock will then not be fed along. But if a pilot-pin is used, it may be set so as to enter the guide hole just before the latch lifts. The latch may be set to lift before the punch reaches the stock. It will then fall after the punch withdraws from the stock, and sufficient time may be allowed for the operator to feed the stock along. This device is best suited for use with automatic feed rollers because the timing of the operations would be more uniform; whereas

if the operator does not pull the stock with uniform speed the latch is apt to drop too soon or too late. Another manner of operating this simple latch is to give it its motion by means of a cam or eccentric on the press shaft. When thus driven its motion can be very care-

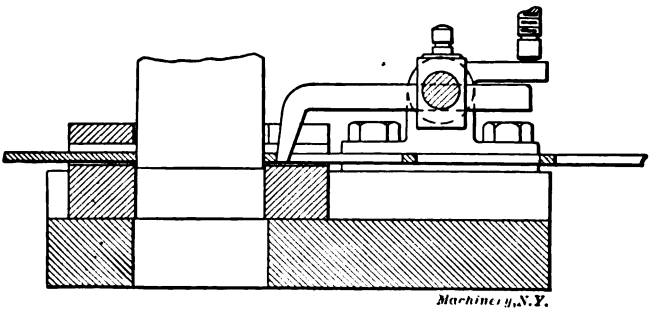

Fig. 37. The Simple Latch Form of Stop

fully timed, irrespective of pilot-pins. This style is also best suited for automatic roll feed. New presses are often provided with this attachment.

The Spring Toe Latch

The spring toe latch involves but little change from the simple latch. Fig. 38 shows it clearly with an enlarged detail of the spring

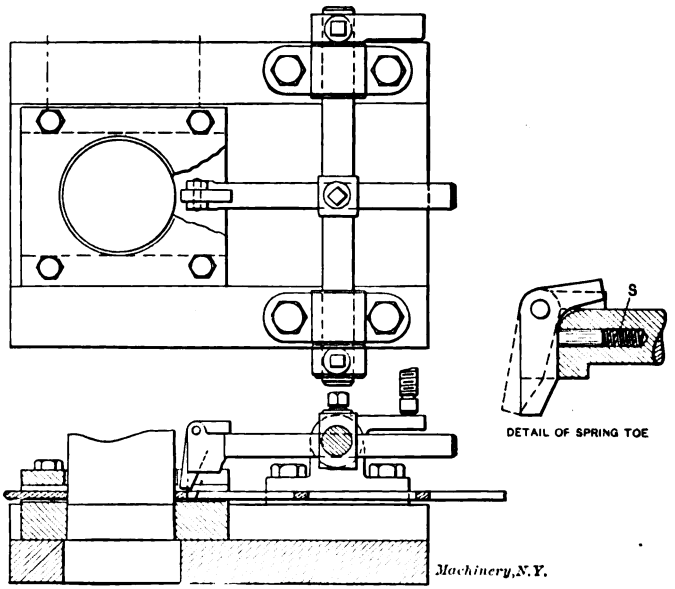

Fig. 38. The Spring Toe Latch Stop

toe. This latch may be used very successfully with hand feed and there is little danger of the stock getting by it too fast. Its operation

is as follows: As the punch lowers and starts to cut the blank, an adjustable screw on the ram or punch plate lifts the latch. Its spring toe snaps forward and when the latch lowers, it rests on the scrap left between two blanks; hence it cannot fall back into its former place. When the operator pulls the stock along, the latch toe drops into the next hole and brings the stock to a stop at the proper point, compressing the light spring *S* as it does so. This design is simple, rigid and effective. The spring toe here shown is preferable to the design which follows because it is light and requires but little tension on the stock to bring it to a stop.

The Side Swing Latch

The side swing latch is shown in Fig. 39 and is but a modification of the latch shown in Fig. 38. When the punch descends, an adjustable screw hits lever *L* and lifts the latch. The whole rod *R* then springs forward till collar *C* stops against *B*. When the latch lowers it rests on the stock as did the spring toe latch. As the stock is pulled along, the latch drops into the next hole and acts as a stop

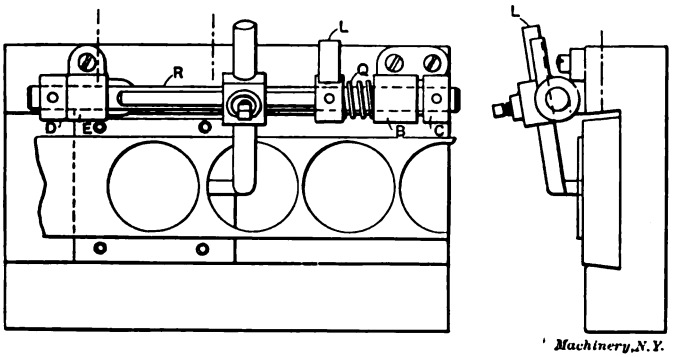

Fig. 39. The Side Swing Latch Stop

again. In this style the tension on the stock must be greater than with the spring toe latch, because the whole rod *R* has to be pulled along against the spring *Q* until collar *D* stops against *E*. If this design were modified, however, so that the side bearings would be used only for allowing the latch to swing, the toe could be constructed like the spring toe latch and would then be quite as effective as this type, though not so rigid.

Positive Heel and Toe Latch

While the two previous automatic stop-pins rely on gravity or a spring to bring them back in position, the heel and toe latch is positively operated. It is shown in Fig. 40, with the stripper removed. Its distinctive feature, which recommends it for use on a large variety of work, is that it is impossible for the stock to slip by it faster than one blank per stroke of the press. This is a very important matter when combination or gang dies are being used, because the pilot-pins so widely used require the guide holes to be punched just ahead of them. If the stock slips too far, the guide holes pass be-

yond the pilot-pins, and when the punch descends, the pilots punch their own holes, throw down a heavy burr and cause a delay—if nothing more serious.

Fig. 41 shows the catch in position to stop the movement of the stock at its point *A*. The stock is feeding to the right. The conical-pointed pin *B* is pushed by the spring *S* so that it engages a conical depression *C* in the end of the catch. By this means the toe of the

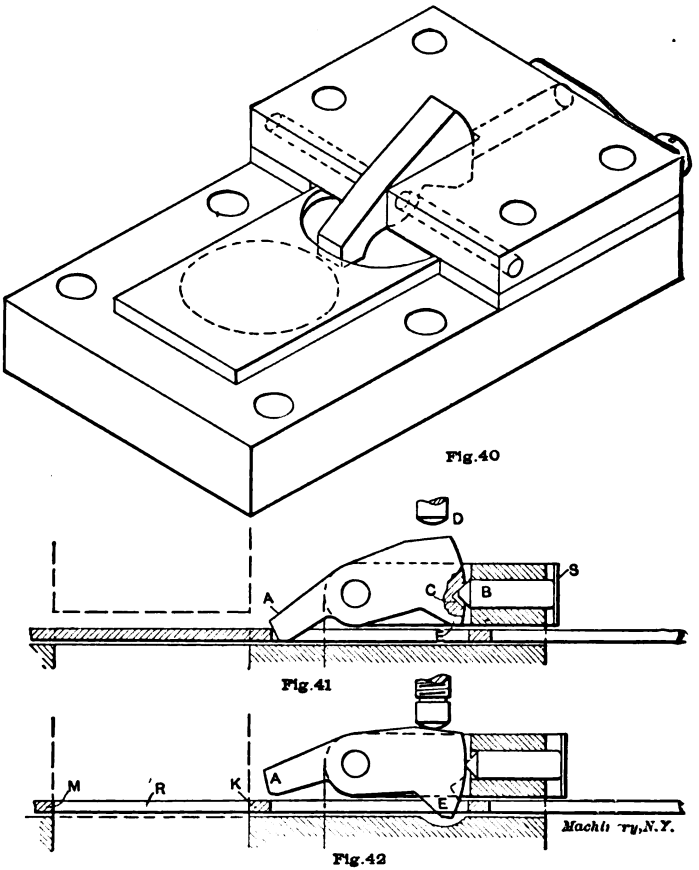

Fig.40

Fig.41

Fig.42

Figs. 40, 41 and 42. Positive Heel and Toe Latch which prevents the Stock from moving more than One Blank per Stroke of the Press

catch is pressed against the die. As the punch descends to cut the next blank, an adjustable screw on the punch plate presses on the top of the catch at *D* and causes the heel to lower and the pin *B* to disengage the notch *C*. The position of the latch is now shown by Fig. 42. Its heel *E* has been lowered into the hole left by the previous blank. It is held in this position by the pressure of the point of *B*. While this is sufficient to hold the catch in its new position, it offers

but little resistance to its return to its original position. The stock may now be moved along. The metal *K*, left between two successive blanks, engages the heel *E* of the latch and lifts it easily. This causes the notch C to engage with the pin *B* and the catch snaps back into its first position. The toe *A* falls into the new opening *R*, and *M* comes to a stop against it. Since the metal *K*, between two successive blanks, cannot pass the heel of the latch without raising it, and since the heel *E* cannot rise without lowering the toe *A* far enough to catch the stock, it is evident that the action is positive. Hence the stock cannot jump ahead faster than one blank at a time. In constructing a stop of this kind, care must be taken to allow under the heel *E*, Fig. 41, but little more height than the thickness of the stock. The length of the catch from toe to heel should be less than the opening left by one blank; then there will be no difficulty in starting the new ends of strips or coils. If necessary, however, the catch may be made so as to measure a little less than two or more openings in the

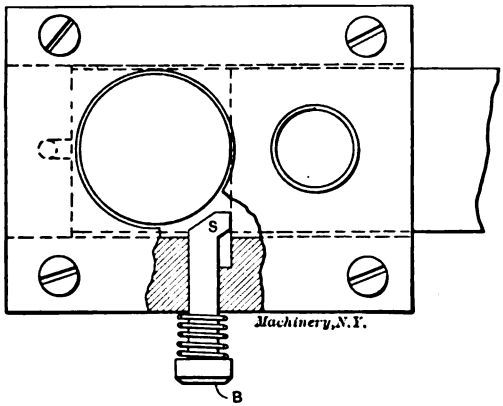

Fig. 43. Starting Device for a Gang Die

stock. In such a case the catch would have to be tripped by hand until the first piece of stock *K*, between two blanks, had passed under the heel *E*. This would cause delays which would amount to considerable in the case of strip stock.

This style of stop-pin has been used successfully with gang dies cutting blanks from brass 1/32 inch thick, and cold rolled steel 1/64 inch thick. In the case of the steel blanks, reels were used and the scrap was wound on a reel as it came from the die. By keeping the proper tension on the scrap, the stock was pulled through the die and kept against the stop-pin. Four thousand blanks per hour were made by this means. In view of the thin stock used and the fact that the dies were of the combination type, this was considered very good. The stop-pin had to be set accurately because the thin stock prevented the pilot-pins from shifting it much in aligning it. Other precautions taken on account of the thin stock were to make the toe broad and to fit the stripper close to the front edge of the toe.

The Gang Starting Device

The devices so far described serve to stop the stock when it has passed the blanking punch. But there are many cases where two or more operations are performed on a piece before it reaches the blanking die and the usual stop-pin. The operator usually gages the proper positions by watching the end of the stock through openings in the stripper, but it is better to have temporary stop-pins that can be used for that purpose. Fig. 43 shows a starting device for a gang die with two punches. When starting a strip the button *B* should be pressed. This brings into action the temporary stop *S*, which locates the stock properly for the first operation. It is then released and springs back out of the way. The stock is then advanced to the regular stop-pin. As many of these side stops may be used as are necessary. Not only do they save annoyance and time, but they add to the life of the dies by preventing the partial cuts due to the stock entering too far at the start.

CHAPTER VI

PRACTICAL EXAMPLES IN DIE DESIGN*

A few years ago, what is now the Providence Mfg. & Tool Co., of Providence, R. I., began the manufacture of a mechanical accountant, the invention of Mr. Turck, the present superintendent of the shop. Mr. Turck's experience, so far as shop work and tool design is concerned, had not been in the direction of die-making, so that in equipping the new plant for the manufacture of the accounting machine he was at first hampered by his lack of knowledge on this subject. The die work required was of a high order. The construction of machines of this type is often such that errors are cumulative. Several similar parts are used, attached to each other in series, for instance, in such a way that if the holes by which they are riveted to each other are slightly wrong in their dimensions, the error will be multiplied by the number of parts. The machine depends for its operation quite largely on the action of pawls upon fine ratchet teeth, and on the meshing of fine pitched gears and toothed segments with each other. The effect of cumulative errors in such circumstances would be to throw these fine pitched ratchets and gears out of step, and make the operation of the machine impossible. Long leverages are also a disturbing factor. When a long, slender member is located by two rivet holes close together, it takes careful work in punching those rivet holes to bring the parts into alignment. In the following some very interesting tools, used mainly for blanking purposes, but also for bending and other operations necessary to complete the product, are shown.

In the halftone in Fig. 44 are shown a number of press-made parts. Some of these are interesting in themselves, while others are remarkable principally for the methods used in producing them. Part No. 12, for instance, is a very simple piece, but the punch and die used in piercing the holes, while not unusual so far as surface appearances go, will serve well to illustrate some of the original practices of this shop. This punch and die, shown in Fig. 46, perform the simple operation of punching the nineteen small holes in the blank, which is located over die *A* by the carefully fitted aperture in jacket *B*. The punch is composed of a body *C*, a cast-iron holding plate *D* in which the small punches *E* are driven, a stripping plate *F*, held as shown, and forced outward by the compressed rectangular ring *G* of rubber behind it.

The Construction of a Piercing Punch with a Novel Stripper Plate

The making of this punch and die follows, in general, the order given below. Stripper *F* is first made of tool steel. The holes for the dowels *H* are next drilled. Then the holes through which punches *E* pass are laid out from a model or drawing, as the case may require, and drilled to a *larger* diameter than the punches which are to pass through

* MACHINERY, June, 1907.

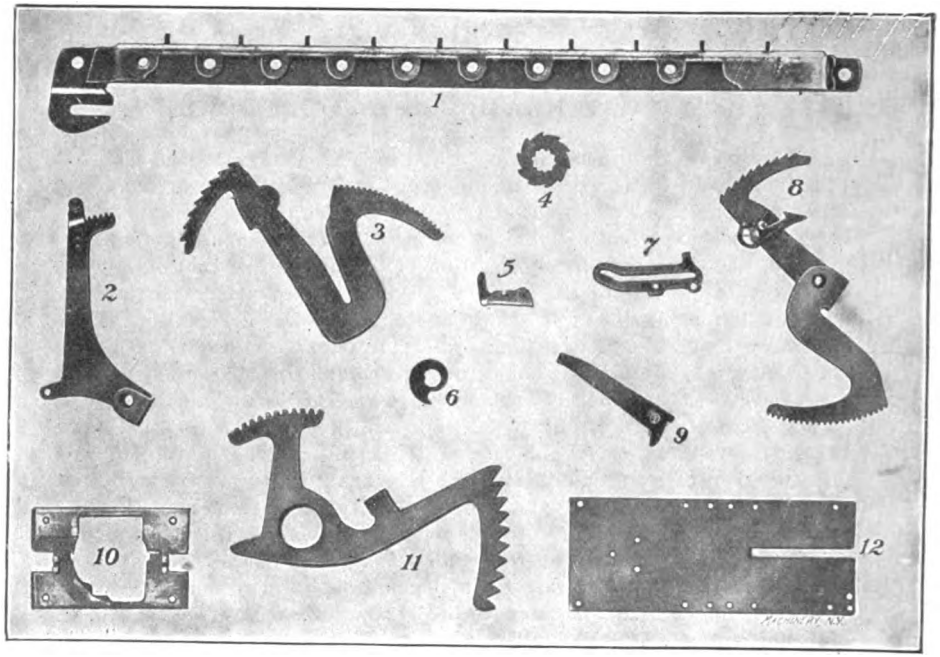

Fig. 44. Some Examples of Good Press-work

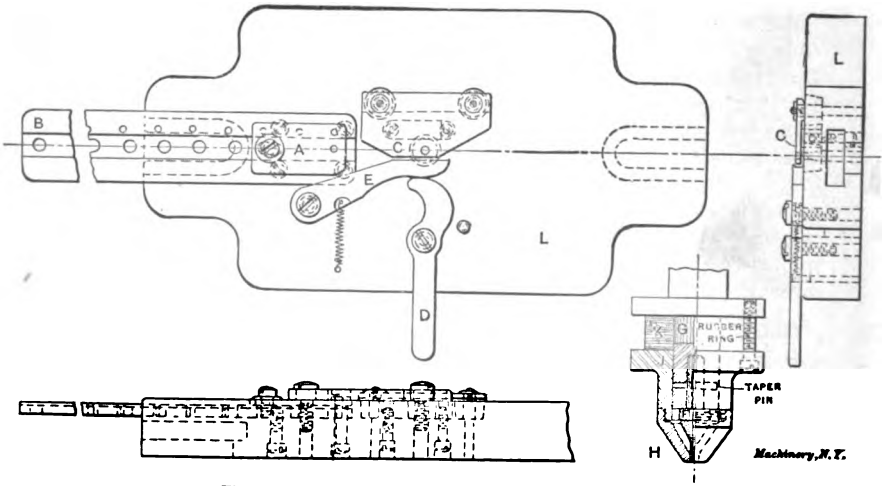

Fig. 45. Construction of Die for Double Punching

them. After these holes have been drilled, the plate is hardened and ground, and the holes for the punches are filled up again by driving into them plugs of tool steel wire, of suitable size. The location of these holes is now laid out again on plate *F*, and this time very carefully; then they are finished to the exact size, or slightly below, if they are to be lapped. Since the body of the plate is hard, it cannot cave in or wear as it would if left soft. A full bearing on the stock to be blanked is absolutely necessary if the work is to be well done. The plugs allow the plunger holes to be located after the hardening of plate *F*, thereby preventing displacement from the heat treatment. To the stripper plate are now riveted the four dowels *H*, which enter holes in the stripper rim or "collet" *J*, and locate the plate. Small round-headed set-screws bear on pins *H* and hold *F* and *J* together. Punch holder *D*, of cast iron, is machined to fit closely in collet *J*, and the holes for the punches are transferred to it from stripper plate *F*. The punches *E*, made of tool steel wire, are now driven into the holder, headed over at the back side, and ground flush. The punches may then be hardened in the usual manner. Before being assembled on the punch body *C* with the rubber spring *G*, a hardened steel backing *K* is inserted between *D* and *C* to take the thrust of the hardened punches.

The rubber spring *G* is cut from sheet stock and may be made either from separate strips built upon each of the four sides of the punch, or from rectangular rings, if that can be done without wasting the stock. Screws *L* are adjusted to bring the face of the stripper flush with the faces of the punches, after which headless set-screws *M* are screwed in to make the adjustment permanent. Screws *L* may then be taken out and replaced without losing the adjustment. The punch holder *D* and pad *K* are held to the holder by screws *N* and dowels *O*.

A Piercing Die with Inserted Tool Steel Plugs for Cutting Edges

The body *A* of the die is made of soft steel or cast iron. In this body are driven standard taper plugs of tool steel of suitable size, and so arranged as to be in position to furnish a tool steel material for all the actual cutting surfaces of the die. In the case shown in Fig. 46, nine of these plugs are used, carrying from one to three holes each. In making the recesses for these plugs standard tools are used. The seats are first drilled nearly to size, and then finished with a tapered end mill or counterbore, which is kept carefully ground to the proper dimensions, so that when the plug is driven in until it binds tightly on the taper, it will also seat on the bottom. These various plugs *P* are prevented from turning in the holes by dowel pins *Q*, in most cases, or, where the plugs run into each other (as shown in two cases in the die here described), by the interlocking of the flat abutting surfaces. These precautions make it possible to remove the plugs at any time and return them accurately to their original positions.

The die plate *A* having been fitted with its plugs as described, the holes in stripper plate *F* are now transferred to it by any suitable

means, all these holes being received in the tool steel plugs as explained. The plugs may now be removed, to be hardened and lapped separately. The clearance holes for the scrap are drilled, and the plugs are returned to their proper places. The jacket *B*, which locates the blank on the die, may, if desired, be punched from stock of suitable thickness by the blanking die used for making the blank to be

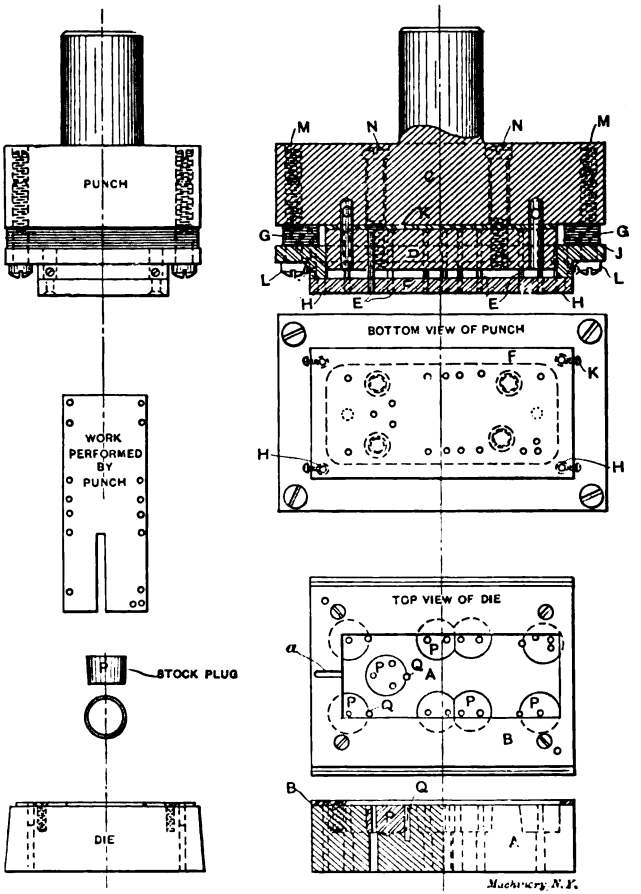

Fig. 46. A Piercing Punch and Die involving some Original Ideas

operated on in this piercing die. The edges of the opening are then merely filed enough to allow the work to enter and be withdrawn easily. A slanting groove, as shown at *a*, is cut with a round file into the jacket at one end to permit the insertion of a pick or awl to remove the work.

The points of interest in this die are: The rubber-backed stripper plate; the use of a soft stripper plate bushed in the manner described

with hardened tool steel; and the insertion of plugs of tool steel in a soft die block to form the cutting edges of the die.

The rubber spring has proven very satisfactory. It will last for a number of years in dies having ordinary use, if it is not exposed to oil and other deteriorating influences. Being in the upper member, there is little likelihood of its being spoiled in this way. The use of this stiffly spring-supported stripper plate gives a punch and die of the design shown all the advantages of a sub-press, so far as concerns the ability to punch small holes in thick material and leave thin walls of metal between open spaces in the punching. As evidence of the ability to do work of this kind with a punch and die of the style just described, parts 7 and 10 in Fig. 44 may be particularly noted. Here the holes are considerably smaller in diameter than the thickness of the stock, and the internal spaces have been punched so close to the edge, in places, that the remaining section is narrower than it is thick.

The method of bushing the stripper plate by drilling the holes large originally, plugging them with tool steel wire after hardening, and redrilling them to the proper size, makes it possible to harden the surfaces in contact with the work, without distortion of the dimensions between the holes. Plates of large size, even, are made in this way.

The advantage claimed for the method by which the stripper plate is made may also be claimed for the use of hardened plugs in a soft die body, since it is possible to harden these parts individually without changing their location with reference to each other. In addition, both of these schemes allow changes to be made in the dies with a minimum of trouble and expense. If it is desired to change the location of a hole in the die, the old plug may be removed and a new one inserted. In the same manner, new holes may be drilled in the stripper plate in which new tool steel wire plugs may be driven for new guiding holes for the punches, although the change is limited by the size of the plugs. This consideration is of considerable importance if the parts manufactured are subject to improvement from time to time. This provision reduces the expense of spoiled work as well, since it is not necessary to throw away an expensive press tool if one or two of the holes are wrongly located.

Rubber-backed vs. Sub-press Dies

It will be noted that part No. 12 in Fig. 44 (for which the punch and die just described were designed) is made in three operations. Under ordinary conditions, experience seems to indicate that this procedure is preferable to the use of the sub-press. The rubber spring-supported stripper plate, as just described, gives all the advantages of the sub-press, so far as ability to do fine work on thick stock is concerned. Slender punches are supported by the stripper in the same way as in the sub-press; the rubber spring holds the stripper so firmly onto the work that the distortion of thin stock is prevented. The sub-press certainly has the advantage of ease of setting in the machine, since it is not necessary to carefully line up the punch and die,

which are in permanent alignment. It is possible, however, that the high initial cost of the sub-press would in many cases more than pay for the extra wages of an experienced and careful man in setting up tools during the lifetime of the punch and die. It must also be admitted that work cannot be done as rapidly with the three sets of tools necessary for making the piece in the manner here described, as would be possible if a sub-press were used. The saving in first cost, however, and in the cost of subsequent operations, is believed to be sufficient in the case of the Providence Mfg. & Tool Co. to show a

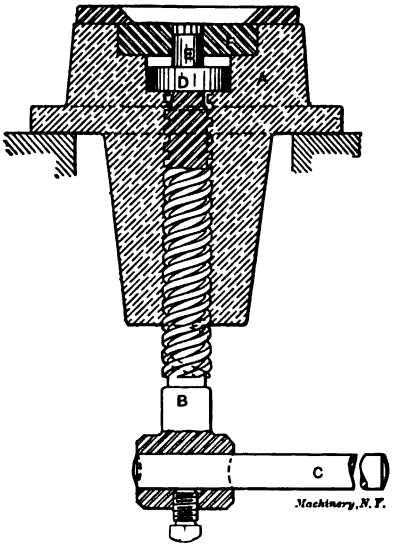

Fig. 47. Die for Bringing up Drawn-down Corners

balance on the right side of the sheet for the simpler form of press tool. It should be said in this connection that this firm freely makes and uses the sub-press die.

The Thickening of Corners Drawn out in Blanking

An operation of particularly great interest is a coining process used for reshaping the points of gears, ratchets, etc.—such parts, for instance, as are shown in samples 4 and 6, Fig. 44. In such a piece as No. 4, whatever the design of the die, the blank produced will be found to have the points drawn down thinner than the stock thickness. To bring the part back to uniform thickness with sharp points, the device shown in Fig. 47 is used. Here we have an attachment to a hand screw press. The body *A* is fastened to the bed of the press. The screw *B* projects through the bed and carries at its lower end a handle *C*, which is adjusted to one side or the other to bring it in position to be swung by the foot of the operator. In a counterbore in body *A* is seated the plug *D* and the ejector *E*. *D* and *E* are forced upward by the action of screw *B*. At *F* is a die, given the shape de-

sired for the outline of the finished part; it is slightly enlarged, however, for a short distance at its upper end. The part as it leaves the blanking press is purposely made a little large in outline at the points where the thinning occurs, due to the drawing out of the stock. When the piece is inserted by the operator in the upper end of this tapering die, the extra metal thus provided is forced inward to thicken the points to the required amount as the punch is brought down upon the work by the hand of the operator. When the piece has been forced to the bottom, it is clamped between the plane surfaces of ejector *E*

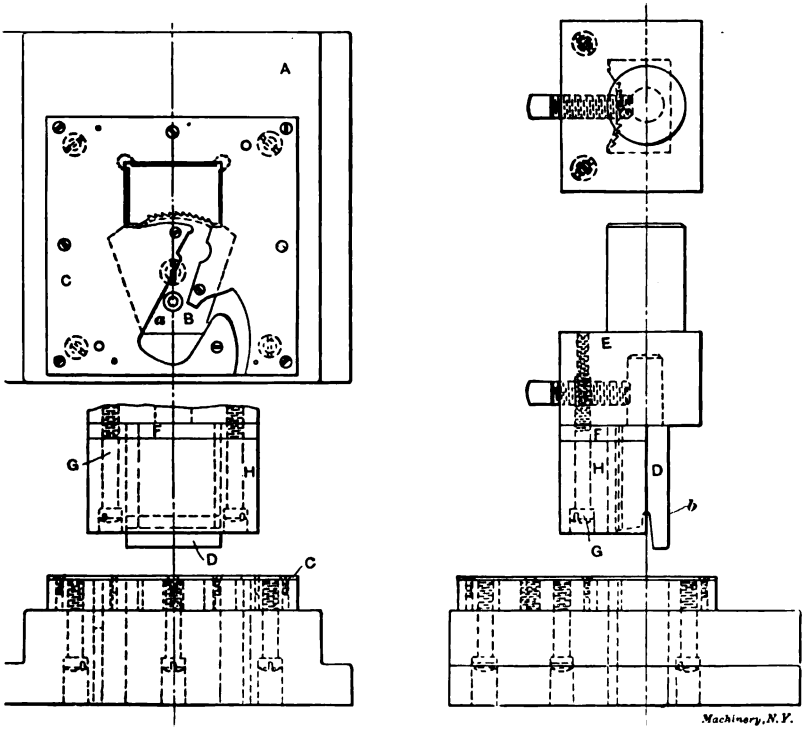

Fig. 48. Example of Type of Die used for Shaving

and the punch above it (not shown), and the metal is forced to flow to that part of the blank where it is most needed. The result is a flat ratchet with plane faces and uniform thickness. It will be understood, of course, that during this coining operation ejector *E* and plug *D* seat in the counterbore in body *A*, screw *B* being lowered out of contact. A push of the operator's foot on handle *C* brings the ejector up again until the piece is forced out of the die. The thread of the screw is of such a steep pitch that the screw will return again by its own weight.

The comparative slowness of operation resulting from the use of a hand and foot power press and hand feeding is, in a measure, char-

acteristic of this shop. It is the belief of the superintendent that better results can be obtained at times by methods like that shown, than by more "modern" ones. The aim is, through careful workmanship and careful inspection, to have the parts so nearly right when assembling time comes, that no fitting will need to be done in the assembled machines. No fitting is, in fact, allowed. Certainly the method described for striking up the corners of these ratchets is a much less dangerous one than would be the case if a power press were used, so the idea has its advantages, so far as safety is concerned, at least.

A Typical Shaving Die

In such parts as are shown at 3 and 11 in Fig. 44, the ratchet teeth and gear teeth are only roughed out in the blanking die, being finished by a second cut or "shaving" process. A typical die and punch for

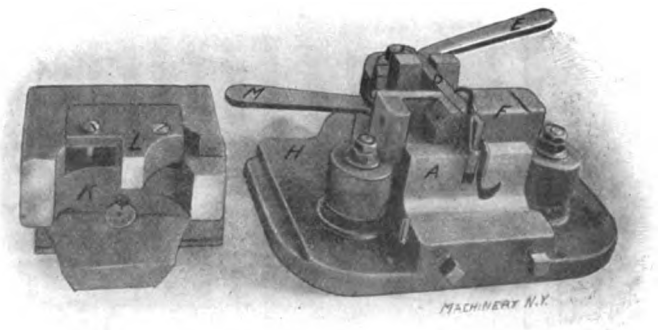

Fig. 49. Bending Attachment with Removable Die. Operation Completed

this operation are shown in Fig. 48. Here, as in Fig. 46, the work is held by a rubber spring backing while the punch is at work. The die is made of a soft body *A*, in which is inserted the hardened piece *B* carrying the cutting edges which are to form the ratchet teeth on the work. This piece *B* has its teeth cut on it in the milling machine, the hole at *a* serving to center the piece for this operation. This gives assurance that the teeth will be properly spaced, and cut accurately to the proper radius. A rectangular opening with carefully machined sides is made through the die block *A*. Into this opening the toothed cutting edges of piece *B* project. As in Fig. 46, a "jacket" *C* is provided for locating the work over the cutting die. The punch *D* is set into a holder *E*, which in turn is fastened in the ram of the machine. A projecting guiding surface, *b*, on the punch, enters the rectangular opening in the die and bears against it on the back and sides. This keeps the cutting surface of the punch up to its work against the cutting edge of the die. As shown, the cutting edge of the punch is beveled. This gives a slight top rake to the edge, and produces a shearing cut as well, the outer corners coming into action before the

center of the outline reaches the stock. The rubber spring backing at *F* is held by screw *G* between the pressure block *H* and the punch holder *E*. It performs the same functions as the stripper plate in the other die.

Bending Punchings to Provide Double Bearings

It will be noticed that samples 1, 5 and 8 in Fig. 44 have been made on the principle of bending the punchings to give a double bearing at pivotal points, the long bearing insuring lateral steadiness of the part without making it necessary to resort to the use of castings with long hubs. This principle is carried out throughout the calculating machine which is this firm's principal product. In some cases, espe-

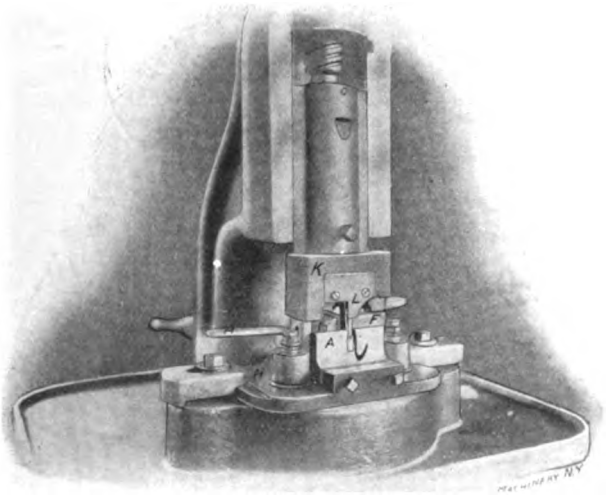

Fig. 50. Bending Device in Use in Screw Press

cially where the pivot holes are punched previous to bending, as is the case in sample 8, very accurate work must be done in the bending to bring the part to exactly the right form. In the sample referred to, for instance, the ratchet teeth on one side and the gear teeth on the other must bear a definite relation to each other, and to the axis about which the part rotates. The bending tools by which the forming operation is performed for this part are shown in the halftones in Figs. 49 and 50 and the engraving Fig. 51. Referring to Fig. 51, the blank for part 8 (shown at No. 3 in Fig. 44 before the piercing of the pivot holes) is laid on top of former *A*, where it is located by the pins *B B* which enter the pivot holes. In this position the part lies between the fixed jaw *C* and the movable jaw *D*, which are then clamped together on the blank by bringing handle *E* to the position shown, where its wedge-shaped cam surface *b* has entered between the long ends of the jaws *D* and *C*, and brought the outer ends together.

The jaws *D* and *C* and lever *E* are all attached to the holder *F*, which is a sliding fit on three vertical posts *G*, fast to the base *H* of the fixture. Slide *F* is held to the upper extreme of the travel against the lock nuts and washers at the top of posts *G* by spiral springs *J* at each

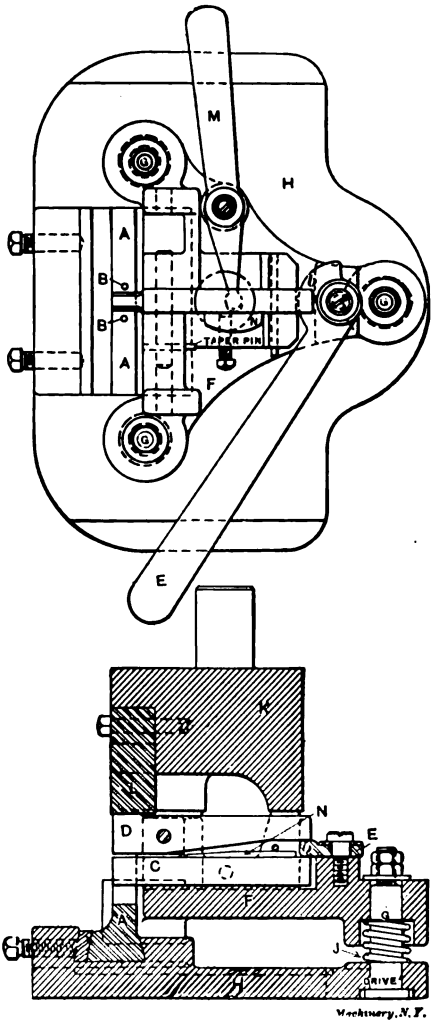

Fig. 51. Construction of Bending Attachment

post. These parts are shown to good advantage in the halftone, Fig. 49. *K* is a plunger mounted in the ram of the press. It bears on finished projections on slide *F* at three points as shown, while the hardened part *L* bears on the top of lever *D*, directly over the work. When *K* and *L* strike slide *F* and lever *D* in their descent, they carry with it

the slide and its attached levers, and the work as well, against the slight resistance of springs *J*. The work grasped between the levers is thus carried down through the opening in die *A*. This action serves to bend the part to the form desired. Fig. 50 shows the operation completed. As shown, this work is done in a hand screw press. This is another example of manufacturing methods which at first sight seem rather crude, but which have proved, in the opinion of the superintendent of this shop, to be most satisfactory, his contention of greater accuracy and more uniform results from such methods applying particularly in the case of forming operations of this kind.

The piece is ejected from the tool at the completion of the bending by lever *M*, which thrusts forward the ejector *N*. This ejector is at its working end slightly less in thickness than the stock of the punching operated on, and is thus able to enter freely between the jaws

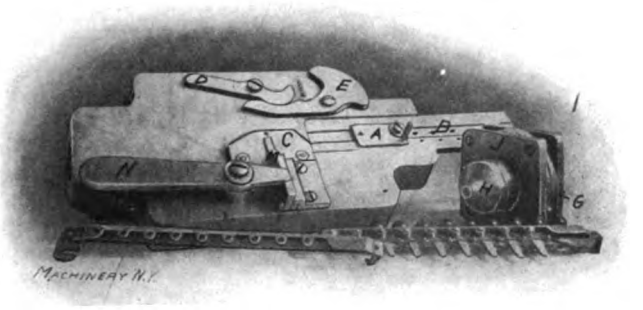

Fig. 52. Double Punching Die shown in Fig. 45

and eject the work. In this tool, members *A*, *C* and *D* are changed for different parts, the rest of the structure being the same, and serving for a number of different operations.

A Die for Double Punching

In the case just described, where double bearings occur, the holes are punched before bending. This is not always the case, however. In samples 1 and 5 in Fig. 44, the parts are first bent and then punched, the operation being performed in a very interesting way. The punch descends and makes the hole in the upper thickness of the stock. Continuing through an intermediate die, and carrying before it the punched-out stock, it arrives at the second or lower thickness of stock. The continued movement of the punch then presses the little plug of punched-out metal through the lower thickness of stock, and this forms the second hole. Strange to say, it has been found in practice that this second hole is generally the better one of the two, even though it is made with a soft plug of steel instead of with a hardened punch.

The engraving Fig. 45 and the halftone Fig. 52 show the double punching tools used in making the pivot holes in sample 1, Fig. 44. This, it

will be seen, is a progressive operation, all the parts in the lot being punched for one of the holes, after which the die is altered and the next hole in order is punched in all parts—and so on. The piece to be operated on is located lengthwise by slipping it over a gage pin in sliding block *A*, which may be adjusted to any position on slide *B* to suit the hole it is desired to punch at the time. Being located on block *A* in the manner described, it is swung around until the intermediate die *C* enters the channel formed by the two sides of the work. Cam lever *D* is then swung to the position shown in the engraving, where it has brought clamp lever *E* against the stock, holding it firmly in position for the operation. The punch *F* is a simple turned piece of hardened steel, held by a taper pin in punch holder *G*. It is surrounded by a stripper *H* which is screwed to a holder *J*, backed by the usual rubber spring at *K*. This serves to hold the work firmly during the operation, and strip the work from the punch when it returns to its upward position. As before described, the punch in its descent breaks through the upper thickness of stock, carries the plug of soft metal thus formed before it until it comes in contact with the lower thickness, where it forces the plug through, and forms the lower hole. It will be noticed that intermediate die *C*, though held firmly, so far as displacement horizontally in any direction is concerned, is yet provided with a rocking face where it bears on the body of the die *L*. This arrangement takes the strain of the punching from the slender intermediate die, which is thus bent downward until it is firmly supported by the stock of the part being worked on beneath it. For removing the work after the operation, an ejector *M* is provided, with a handle *N*, which operates in a way which will be easily understood from an inspection of Fig. 52. It is not shown in Fig. 45, having been added at a date later than that of the drawing from which this cut was made.

Practice in Hardening Punches

Blanking punches are hardened in this shop in a way that is originated here and not practiced elsewhere, at least not to any great extent. After the blanking punch has been cut into the female portion of the die, and finished ready for hardening, it is placed in the fire and brought to a slightly lower heat than ordinarily used for hardening clear through. Cyanide is then deposited on the parts of the tool to be hardened—that is, on the periphery of the cutting edge. It is allowed to "soak in," it sometimes being necessary to apply cyanide two or three times, depending on the size and bulk of the punch. It is then again brought to the proper heat, which should be a little lower than is ordinarily used for hardening clear through. Then it is quenched in oil. With large and bulky pieces it is first necessary to immerse the work in water as a preliminary cooling operation. This immersion should merely be a dash into the water and out again, after which the piece is put into the oil until cooled.

No. 50. Principles and Practice of Assembling Machine Tools, Part I.

No. 51. Principles and Practice of Assembling Machine Tools, Part II.

No. 52. Advanced Shop Arithmetic for the Machinist.

No. 53. Use of Logarithms and Logarithmic Tables.

No. 54. Solution of Triangles, Part I. —Methods, Rules and Examples.

No. 55. Solution of Triangles, Part II. —Tables of Natural Functions.

No. 56. Ball Bearings.—Principles of Design and Construction.

No. 57. Metal Spinning.—Machines, Tools and Methods Used.

No. 58. Helical and Elliptic Springs.—Calculation and Design.

No. 59. Machines, Tools and Methods of Automobile Manufacture.

No. 60. Construction and Manufacture of Automobiles.

No. 61. Blacksmith Shop Practice.—Model Blacksmith Shop; Welding; Forging of Hooks and Chains; Miscellaneous.

No. 62. Hardness and Durability Testing of Metals.

No. 63. Heat Treatment of Steel.—Hardening, Tempering, Case-Hardening.

No. 64. Gage Making and Lapping.

No. 65. Formulas and Constants for Gas Engine Design.

No. 66. Heating and Ventilation of Shops and Offices.

No. 67. Boilers.

No. 68. Boiler Furnaces and Chimneys.

No. 69. Feed Water Appliances.

No. 70. Steam Engines.

No. 71. Steam Turbines.

No. 72. Pumps, Condensers, Steam and Water Piping.

No. 73. Principles and Applications of Electricity, Part I.—Static Electricity; Electrical Measurements; Batteries.

No. 74. Principles and Applications of Electricity, Part II.—Magnetism; Electro-Magnetism; Electro-Plating.

No. 75. Principles and Applications of Electricity, Part III.—Dynamos; Motors; Electric Railways.

No. 76. Principles and Applications of Electricity, Part IV.—Electric Lighting.

No. 77. Principles and Applications of Electricity, Part V.—Telegraph and Telephone.

No. 78. Principles and Applications of Electricity, Part VI.—Transmission of Power.

No. 79. Locomotive Building, Part I.—Main and Side Rods.

No. 80. Locomotive Building, Part II. —Wheels; Axles; Driving Boxes.

No. 81. Locomotive Building, Part III. —Cylinders and Frames.

No. 82. Locomotive Building, Part IV. —Valve Motion.

No. 83. Locomotive Building, Part V. —Boiler Shop Practice.

No. 84. Locomotive Building, Part VI. —Erecting.

No. 85. Mechanical Drawing, Part I. —Instruments; Materials; Geometrical Problems.

No. 86. Mechanical Drawing, Part II. —Projection.

No. 87. Mechanical Drawing, Part III. —Machine Details.

No. 88. Mechanical Drawing, Part IV. —Machine Details.

No. 89. The Theory of Shrinkage and Forced Fits.

No. 90. Railway Repair Shop Practice.

No. 91. Operation of Machine Tools.—The Lathe, Part I.

No. 92. Operation of Machine Tools.—The Lathe, Part II.

No. 93. Operation of Machine Tools.—Planer, Shaper, Slotter.

No. 94. Operation of Machine Tools.—Drilling Machines.

No. 95. Operation of Machine Tools.—Boring Machines.

No. 96. Operation of Machine Tools.—Milling Machines, Part I.

No. 97. Operation of Machine Tools.—Milling Machines, Part II.

No. 98. Operation of Machine Tools.—Grinding Machines.

No. 99. Automatic Screw Machine Practice, Part I.—Operation of the Brown & Sharpe Automatic Screw Machine.

No. 100. Automatic Screw Machine Practice, Part II.—Designing and Cutting Cams for the Automatic Screw Machine.

No. 101. Automatic Screw Machine Practice, Part III.—Circular Forming and Cut-off Tools.

No. 102. Automatic Screw Machine Practice, Part IV.—External Cutting Tools.

No. 103. Automatic Screw Machine Practice, Part V.—Internal Cutting Tools.

No. 104. Automatic Screw Machine Practice, Part VI.—Threading Operations.

No. 105. Automatic Screw Machine Practice, Part VII.—Knurling Operations.

No. 106. Automatic Screw Machine Practice, Part VIII.—Cross Drilling, Burring and Slotting Operations.

ADDITIONAL TITLES WILL BE ANNOUNCED IN MACHINERY FROM TIME TO TIME

MACHINERY'S DATA SHEET SERIES

MACHINERY'S Data Sheet Books include the well-known series of Data Sheets originated by MACHINERY, and issued monthly as supplements to the publication; of these Data Sheets over 500 have been published, and 6,000,000 copies sold. Revised and greatly amplified, they are now presented in book form, kindred subjects being grouped together. The purchaser may secure either the books on those subjects in which he is specially interested, or, if he pleases, the whole set at one time. The price of each book is 25 cents (one shilling) delivered anywhere in the world.

CONTENTS OF DATA SHEET BOOKS

No. 1. Screw Threads.—United States, Whitworth, Sharp V- and British Association Standard Threads; Briggs Pipe Thread; Oil Well Casing Gages; Fire Hose Connections; Acme Thread; Worm Threads; Metric Threads; Machine, Wood, and Lag Screw Threads; Carriage Bolt Threads, etc.

No. 2. Screws, Bolts and Nuts.—Fillister-head, Square-head, Headless, Collar-head and Hexagon-head Screws; Standard and Special Nuts; T-nuts, T-bolts and Washers; Thumb Screws and Nuts; A. L. A. M. Standard Screws and Nuts; Machine Screw Heads; Wood Screws; Tap Drills; Lock Nuts; Eye-bolts, etc.

No. 3. Taps and Dies.—Hand, Machine, Tapper and Machine Screw Taps; Taper Die Taps; Sellers Hobs; Screw Machine Taps; Straight and Taper Boiler Taps; Stay-bolt, Washout, and Patch-bolt Taps; Pipe Taps and Hobs; Solid Square, Round Adjustable and Spring Screw Threading Dies.

No. 4. Reamers, Sockets, Drills and Milling Cutters.—Hand Reamers; Shell Reamers and Arbors; Pipe Reamers; Taper Pins and Reamers; Brown & Sharpe, Morse and Jarno Taper Sockets and Reamers; Drills; Wire Gages; Milling Cutters; Setting Angles for Milling Teeth in End Mills and Angular Cutters, etc.

No. 5. Spur Gearing.—Diametral and Circular Pitch; Dimensions of Spur Gears; Tables of Pitch Diameters; Odontograph Tables; Rolling Mill Gearing; Strength of Spur Gears; Horsepower Transmitted by Cast-iron and Rawhide Pinions; Design of Spur Gears; Weight of Cast-iron Gears; Epicyclic Gearing.

No. 6. Bevel, Spiral and Worm Gearing.—Rules and Formulas for Bevel Gears; Strength of Bevel Gears; Design of Bevel Gears; Rules and Formulas for Spiral Gearing; Tables Facilitating Calculations; Diagram for Cutters for Spiral Gears; Rules and Formulas for Worm Gearing, etc.

No. 7. Shafting, Keys and Keyways.—Horsepower of Shafting; Diagrams and Tables for the Strength of Shafting; Forcing, Driving, Shrinking and Running Fits; Woodruff Keys; United States Navy Standard Keys; Gib Keys; Milling Keyways; Duplex Keys.

No. 8. Bearings, Couplings, Clutches, Crane Chain and Hooks.—Pillow Blocks; Babbitted Bearings; Ball and Roller Bearings; Clamp Couplings; Plate Couplings; Flange Couplings; Tooth Clutches; Crab Couplings; Cone Clutches; Universal Joints; Crane Chain; Chain Friction; Crane Hooks; Drum Scores.

No. 9. Springs, Slides and Machine Details.—Formulas and Tables for Spring Calculations; Machine Slides; Machine Handles and Levers; Collars; Hand Wheels; Pins and Cotters; Turn-buckles, etc.

No. 10. Motor Drive, Speeds and Feeds, Change Gearing, and Boring Bars.—Power required for Machine Tools; Cutting Speeds and Feeds for Carbon and High-speed Steel; Screw Machine Speeds and Feeds; Heat Treatment of High-speed Steel Tools; Taper Turning; Change Gearing for the Lathe; Boring Bars and Tools, etc.

No. 11. Milling Machine Indexing, Clamping Devices and Planer Jacks.—Tables for Milling Machine Indexing; Change Gears for Milling Spirals; Angles for setting Indexing Head when Milling Clutches; Jig Clamping Devices; Straps and Clamps; Planer Jacks.

No. 12. Pipe and Pipe Fittings.—Pipe Threads and Gages; Cast-iron Fittings; Bronze Fittings; Pipe Flanges; Pipe Bends; Pipe Clamps and Hangers; Dimensions of Pipe for Various Services, etc.

No. 13. Boilers and Chimneys.—Flue Spacing and Bracing for Boilers; Strength of Boiler Joints; Riveting; Boiler Setting; Chimneys.

No. 14. Locomotive and Railway Data.—Locomotive Boilers; Bearing Pressures for Locomotive Journals; Locomotive Classifications; Rail Sections; Frogs, Switches and Cross-overs; Tires; Tractive Force; Inertia of Trains; Brake Levers; Brake Rods, etc.

No. 15. Steam and Gas Engines.—Saturated Steam; Steam Pipe Sizes; Steam Engine Design; Volume of Cylinders; Stuffing Boxes; Setting Corliss Engine Valve Gears; Condenser and Air Pump Data; Horsepower of Gasoline Engines; Automobile Engine Crankshafts, etc.

No. 16. Mathematical Tables.—Squares of Mixed Numbers; Functions of Fractions; Circumference and Diameters of Circles; Tables for Spacing off Circles; Solution of Triangles; Formulas for Solving Regular Polygons; Geometrical Progression, etc.

No. 17. Mechanics and Strength of Materials.—Work; Energy; Centrifugal Force; Center of Gravity; Motion; Friction; Pendulum; Falling Bodies; Strength of Materials; Strength of Flat Plates; Ratio of Outside and Inside Radii of Thick Cylinders, etc.

No. 18. Beam Formulas and Structural Design.—Beam Formulas; Sectional Moduli of Structural Shapes; Beam Charts; Net Areas of Structural Angles; Rivet Spacing; Splices for Channels and I-beams; Stresses in Roof Trusses, etc.

No. 19. Belt, Rope and Chain Drives.—Dimensions of Pulleys; Weights of Pulleys; Horsepower of Belting; Belt Velocity; Angular Belt Drives; Horsepower transmitted by Ropes; Sheaves for Rope Drive; Bending Stresses in Wire Ropes; Sprockets for Link Chains; Formulas and Tables for Various Classes of Driving Chain.

No. 20. Wiring Diagrams, Heating and Ventilation, and Miscellaneous Tables.—Typical Motor Wiring Diagrams; Resistance of Round Copper Wire; Rubber Covered Cables; Current Densities for Various Contacts and Materials; Centrifugal Fan and Blower Capacities; Hot Water Main Capacities; Miscellaneous Tables: Decimal Equivalents, Metric Conversion Tables, Weights and Specific Gravity of Metals, Weights of Fillets, Drafting-room Conventions, etc.

MACHINERY, the monthly mechanical journal, originator of the Reference and Data Sheet Series, is published in three editions—the *Shop Edition*, $1.00 a year; the *Engineering Edition*, $2.00 a year, and the *Foreign Edition*, $3.00 a year.

The Industrial Press, Publishers of MACHINERY,

49-55 Lafayette Street, New York City, U. S. A.

MACHINERY'S
REFERENCE SERIES

EACH PAMPHLET IS ONE UNIT IN A COMPLETE LIBRARY OF MACHINE DESIGN AND SHOP PRACTICE REVISED AND REPUBLISHED FROM MACHINERY

No. 14

DETAILS OF MACHINE TOOL DESIGN

SECOND EDITION

CONTENTS

Elementary Principles of Cone Pulleys and Belts, by W. L. CHENEY - - - - - - - - - - 3

Cone Pulley Radii, by JOHN J. HARMAN - - - - 7

Strength of Countershafts, by FRANK B. KLEINHANS - 15

Tumbler Gear Design, by JOHN EDGAR - - - - 19

Faults of Iron Castings, by FORREST E. CARDULLO - 26

Proportions of Machines Built in a Series of Sizes, by STANLEY H. MOORE - - - - - - - 36

Copyright 1910, The Industrial Press, Publishers of MACHINERY
49-55 Lafayette Street, New York City

MACHINERY'S REFERENCE SERIES

This treatise is one unit in a comprehensive Series of Reference books, originated by MACHINERY, and including an indefinite number of compact units, each covering one subject thoroughly. The whole series comprises a complete working library of mechanical literature in which the Mechanical Engineer, the Master Mechanic, the Designer, the Machinist and Tool-maker will find the special information he wishes to secure, selected, carefully revised and condensed for him. The books are sold singly or in complete sets, as may be desired. The price of each book is 25 cents, and it is possible to secure them on even more favorable terms under special offers issued by MACHINERY'S circulation department and sent to any one on request.

The success of the Reference Series was instantaneous and copies are now widely distributed in machine shops and metal working plants everywhere.

CONTENTS OF REFERENCE BOOKS

No. 1. WORM GEARING.—Calculating Dimensions for Worm Gearing; Hobs for Worm-Gears; Location of Pitch Circle; Self-Locking Worm Gearing; etc.

No. 2. DRAFTING-ROOM PRACTICE.—Drafting-Room System; Tracing, Lettering and Mounting; Card Index Systems.

No. 3. DRILL JIGS.—Elementary Principles of Drill Jigs; Drilling Jig Plates; Examples of Drill Jigs; Jig Bushings; Using Jigs to Best Advantage.

No. 4. MILLING FIXTURES.—Elementary Principles of Milling Fixtures; Collection of Examples of Milling Fixture Design, from practice.

No. 5. FIRST PRINCIPLES OF THEORETICAL MECHANICS.

No. 6. PUNCH AND DIE WORK.—Principles of Punch and Die Work; Suggestions for the Making and Use of Dies; Examples of Die and Punch Design.

No. 7. LATHE AND PLANER TOOLS.—Cutting Tools for Planer and Lathe; Boring Tools; Shape of Standard Shop Tools; Forming Tools.

No. 8. WORKING DRAWINGS AND DRAFTING-ROOM KINKS.

No. 9. DESIGNING AND CUTTING CAMS.—Drafting of Cams; Cam Curves; Cam Design and Cam Cutting; Suggestions in Cam Making.

No. 10. EXAMPLES OF MACHINE SHOP PRACTICE.—Cutting Bevel Gears with Rotary Cutters; Making a Worm-Gear; Spindle Construction.

No. 11. BEARINGS.—Design of Bearings; Causes of Hot Bearings; Alloys for Bearings; Ball Bearings; Friction of Roller Bearings.

No. 12. MATHEMATICS OF MACHINE DESIGN.—Compiled with special reference to shafting and efficiency of hoisting machinery.

No. 13. BLANKING DIES.—Making Blanking Dies; Blanking and Piercing Dies; Construction of Split Dies; Novel Ideas in Die Making.

No. 14. DETAILS OF MACHINE TOOL DESIGN.—Cone Pulleys and Belts; Strength of Countershafts; Tumbler Gear Design; Faults of Iron Castings.

No. 15. SPUR GEARING.—First Principles of Gearing; Formulas for Spur Gearing; Design and Calculation of Gear Wheels; Strength of Gear Teeth.

No. 16. MACHINE TOOL DRIVES.—Speeds and Feeds of Machine Tools; Geared or Single Pulley Drives; Drives for High Speed Cutting Tools.

No. 17. STRENGTH OF CYLINDERS.—Formulas, Charts, and Diagrams for Thick Hollow Cylinders; Design of Thick Cylinders; Cast Iron Cylinders.

No. 18. SHOP ARITHMETIC FOR THE MACHINIST.—Tapers; Change Gears; Cutting Speeds; Feeds; Indexing; Gearing for Cutting Spirals; Angles.

No. 19. USE OF FORMULAS IN MECHANICS.—Mathematical Signs and Formulas; Strength of Materials; Graphical Methods; Levers; Center of Gravity.

No. 20. SPIRAL GEARING.—Calculating Spiral Gears; Rules, Formulas, and Diagrams for Designing Spiral Gears; Efficiency of Spiral Gearing, etc.

See inside back cover for additional titles

MACHINERY'S REFERENCE SERIES

EACH NUMBER IS ONE UNIT IN A COMPLETE LIBRARY OF MACHINE DESIGN AND SHOP PRACTICE REVISED AND REPUBLISHED FROM MACHINERY

NUMBER 14

DETAILS OF MACHINE TOOL DESIGN

SECOND EDITION

CONTENTS

Elementary Principles of Cone Pulleys and Belts, by W. L. CHENEY - - - - - - - - - - 3

Cone Pulley Radii, by JOHN J. HARMAN - - - - - 7

Strength of Countershafts, by FRANK B. KLEINHANS - 15

Tumbler Gear Design, by JOHN EDGAR - - - - - 19

Faults of Iron Castings, by FORREST E. CARDULLO - 26

Proportions of Machines Built in a Series of Sizes, by STANLEY H. MOORE - - - - - - - - - - 36

Copyright, 1910, The Industrial Press, Publishers of MACHINERY
49-55 Lafayette Street, New York City

CHAPTER I

ELEMENTARY PRINCIPLES OF CONE PULLEYS AND BELTS*

Everyone knows that cone pulleys are usually made with regular steps; that is, if it is one inch from one step to the next, it is also one inch from the second to the third, etc., the reason being that when the centers of the shafts on which the cones run are a fair distance apart, the belt will pass very nearly half way around that part of each cone on which it is running, and the length of the belt will consequently be approximately equal to twice the distance between the shafts, added to half the circumference of the grade of one of the cones on which it is running, and half the circumference of the grade of the other cone on which it is running. As the steps are even, the half circumference of any two grades of each cone will, when added together, produce the same result. For example, if we had two cones, the diameters of the several grades of which were 6, 8, 10 and 12 inches, it is evident that the sum of half the diameters taken anywhere along the cones, as they would be set up for work, would in every case be the same. If the diameters are the same, it follows that the circumference must also be the same, and, of course, that half the circumference must be the same, so that when the centers of the shafts are a fair distance apart, and the difference between the largest and smallest step of the cone not too great, the same belt will run equally well anywhere on the cone, because it runs so near half way around each grade of the two cones on which it is running, that the slight difference is within the practical limit of the stretch of the belt.

But when the shafts are near together, and when the difference between the largest and smallest step of the cone is considerable, the belt is not elastic enough to make up this difference. Fig. 1 shows a three-step cone, the grades being 4, 18, and 32 inches diameter, respectively, there being a difference of 14 inches on the diameter for each successive grade, and the step being therefore 7 inches in each case. Of course, it is not likely that such a cone as this would be made for practical use, but it is well to go to extremes when looking for a principle. Now, it is evident that two cones, even if like the one shown in the cut, were set up far enough apart, they would still allow the belt to run very nearly half way around each grade of the two cones, the angularity of the belt would be slight, and the length of belt would therefore still be as mentioned above.

But (again taking an extreme case) by reference to Fig. 2, which is intended to represent a belt running from the largest grade of one cone to the smallest grade of the other cone, we see that the belt runs three quarters of the way around the large pulley, and only one quarter

* MACHINERY, April, 1895.

of the way around the small one, the distance between the shafts in this case being 19¾ inches.

The length of this belt will evidently be equal to three quarters of the distance around the large pulley, plus one quarter the distance around the small pulley, plus the distances *A* and *B*, which we find to be each 14 inches. The circumference of a 32-inch diameter pulley is 100½ inches, and the circumference of a 4-inch diameter pulley is 12½ inches (near enough for our present purpose); three quarters of 100½ is 75⅜, and one quarter of 12½ is 3⅛; the length of a belt, then, to go around a 4-inch pulley and a 32-inch pulley, running at a distance of 19¾ inches apart, is 75⅜ plus 3⅛ plus 14 plus 14; total, 106½ inches.

Now, let us take the middle cone, when the belt is running on two pulleys, both 18 inches diameter (see Fig. 3), and, of course, the same

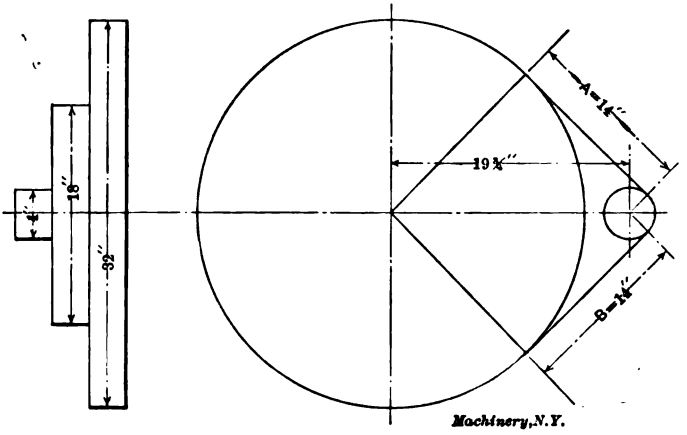

Fig. 1 Fig. 2

distance apart as before. The circumference of an 18-inch pulley is 56½ inches, and half the circumference of two 18-inch pulleys is evidently the same as the whole circumference of one 18-inch pulley; the length of belt in this case will then evidently be 56½ plus 19¾ plus 19¾; total, 96 inches. It is therefore evident that a belt long enough to run on a 4- and 32-inch pulley, 19¾ inches apart, is 10½ inches too long to run on two 18-inch pulleys 19¾ inches apart, and, of course, it is therefore 10½ inches too long to run on the middle grades of such a cone as we have under consideration.

The thing to do, then, is to make the middle grades of these cones (or the two 18-inch pulleys) enough larger than 18 inches diameter to just take up this 10½ inches of belt, and if this were the only case we had to deal with, it would be very easy to settle it by saying that as half the circumference of two 18-inch pulleys is the same as the whole circumference of one 18-inch pulley, we should make the two 18-inch pulleys enough larger in diameter to make an additional circumference of 10½ inches; and as 3⅜ inches is nearly the diameter of

a 10½-inch circumference pulley, by making the middle of both cones 18 plus 3⅜ inches diameter (that is, 21⅜ inches diameter) our trouble would be ended in this particular case. It is easy enough to see, by looking at Fig. 2, that the belt being obliged to go three quarters of the way around the large pulley, is what makes it so much too long to go around the two middle pulleys, where, of course, it goes but half way around each. But, of course, what we want is some way of calculating the diameters to turn any pair of cones, running at any distance apart.

If we were to draw these same 32- and 4-inch pulleys twice 19¾ inches apart, and then three times 19¾ inches apart, and so on, until we got them far enough apart so that the belt would practically run half way around each, and should calculate the diameter of the middle grade of the cone to fit each distance, we would probably formulate a rule that would work for any distance apart, with this particular cone; but as it is evident that the further apart the cones are to run, the nearer to the nominal diameter of 18 inches must the middle of

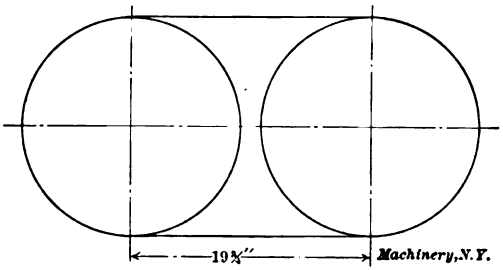

Fig. 3

the cones be turned, so also must it be evident that the less difference between the largest and smallest diameter of the cone, the less must also be the excess over nominal diameter of the middle of the cones.

Any method, then, of calculating such problems must take both of these things into consideration. The nominal diameter of the middle of any cone will be equal to half the sum of the diameters of the largest and smallest part respectively. This is almost self-evident, and no proof of it is necessary in this connection. What we want, then, is some way to find out how much larger than the nominal diameter to turn any one cone or cones to fit the conditions under which they are to run. The following formula is the result of a thorough investigation of this subject by Prof. Rankine, and has proved itself to be practically correct in the shop, as well as satisfactory to those mathematicians who are competent to criticise it. This formula is:

$$R = \frac{R_1 + R_2}{2} + \frac{(R_1 - R_2)^2}{2\pi C}.$$

This formula translated into plain English means that the radius of the center of a cone will be equal to the radius of the smallest part, added to the radius of the largest part, and this sum divided by

2, and added to this the difference in radii between the largest and smallest part squared, and then divided by twice the center distance between the cones multiplied by 3.1416. That is, the first half of the formula gives the radius at the center of a cone, when the largest and smallest radii are known, and, of course, if the middle radius is equal to the smallest radius added to the largest radius and the sum divided by 2, it follows that the middle diameter is equal to half the sum of the diameters of the largest and smallest part, respectively, as mentioned before. The second part of the formula allows us to calculate how much larger than this nominal diameter to make the middle of a cone, no matter what the size or center distance.

Applying this formula to the case of the cones shown in Figs. 1, 2 and 3, we find the radius of the middle of the cone to be 10 6/10 inches, or, what is the same thing, the diameter to be 21 2/10 inches, which, in view of the extreme case under consideration, is very near the first result obtained (21⅝), and shows that the formula is perfectly safe in any case likely to occur in practice.

When this formula is reduced so as to express the numerical value of diameters instead of radii, it takes the following form:

$$\text{Diameter at center of cone} = \frac{D+d}{2} + \frac{(D-d)^2}{12\frac{1}{2}C},$$

the 12½ being the nearest value in plain and easy figures to which the quantity containing π in the original formula can be reduced.

Applying this simplified formula to the cone which we have been considering, it will be found that the middle diameter is 21 2/10, the same as by the original Rankine formula.

If a cone has five steps instead of three, it will be practically correct to add half as much to the nominal diameters of the second and fourth grades as was added to the middle grade, or, if it has four grades, add two-thirds of what is found by the calculation to the second and third grades (as there is evidently no middle grade). If more than four or five grades, add to each grade according to the same principle.

We have so far been considering two similar cones, but it often happens that one cone is larger than the other. In such case the problem becomes a little longer to work, and the length of belt necessary to go around each pair of steps of the cones must be used to find the diameters; that is, starting with one end of the cone, find the length of belt, and then calculate how much larger or smaller (as the case may be) than the nominal diameter it is necessary to make each grade, in order to make the same length of belt run properly.

Prof. Rankine has worked out a formula for the length of belt also, which, reduced to diameters, is as follows:

$$\text{Length of belt} = 2C + \frac{11D+11d}{7} + \frac{(D-d)^2}{4C}.$$

That is, the length of a belt to pass around any two pulleys (and, of course, a cone is simply a set of pulleys) is the sum of the following quantities: First, twice the center distance of the shafts; second, 11 times the diameter of the larger pulley, plus 11 times the diameter

of the smaller pulley, and this sum divided by 7. This gives the nominal length of belt, or what would be practically correct if the center distance was fairly great; for the excess, the last part of the formula must be used, which is the difference between the diameters of the larger and smaller pulleys squared, and this result divided by 4 times the center distance.

Having found the length of belt to run on one end of the cones, and keeping this for a starter, we can easily find how much to add to, or take from, the nominal diameter of any other part of the cone to make the same belt run, as explained before. If, for instance, we find that the nominal diameters of the next grades that we try to bring the length of belt one-half inch shorter than the first calculation, we add enough to one or both diameters to make up one-half inch of circumference, which would be about 5/32 of diameter, and this could all be added to one pulley, or half of it could be added to each pulley, as convenient, and this would be practically correct.

CHAPTER II

CONE PULLEY RADII*

In the present chapter a method presented by Dr. L. Burmester in his "Lehrbuch der Kinematik," for the solution of the cone pulley problem, has been extensively treated. Dr. Burmester's method is entirely graphical, and is exceedingly simple in application. While it is not theoretically exact, it is, as will be shown later, much more accurate than practice requires.

In order to bring out more clearly the points which will come up in the case of open belts, let us first consider the simple case of crossed belts. It is a well-known fact that in this case the only calculation necessary in order to find the radii of the various steps is to make the sum of the radii of any two corresponding steps a constant. This may be shown in the following manner:

a = radius of step, driving cone.

A = length of belt from contact on driving cone to contact on driven cone.

b = radius of step, driven cone.

E = distance between centers of cones.

K = the constant sum of the radii of two corresponding steps.

θ = angle shown, Figs. 4 and 5.

Then

$$\sin\theta_1 = \frac{a_1 + b_1}{E} = \frac{K}{E}$$

$$\sin\theta_2 = \frac{a_2 + b_2}{E} = \frac{K}{E}$$

* MACHINERY, September, 1905.

Therefore $\theta_1 = \theta_2 = \theta =$ a constant.

Therefore the arc of contact on each pulley $= 180° + 2\theta =$ a constant.

$$\text{Also } \cot\theta = \frac{A_1}{a_1 + b_1} = \frac{A_1}{K} = \frac{A_2}{a_2 + b_2} = \frac{A_2}{K}$$

$$A_1 = A_2 = K \cot\theta = \text{a constant.}$$

$$\text{But length of belt} = 2A + \frac{180° + 2\theta}{360°} \times (2\pi a_1 + 2\pi b_1)$$

$$= 2A + \frac{180° + 2\theta}{360°} \times 2\pi \times (a_1 + b_1)$$

in which, as has been shown above, all the terms are constants, therefore length of belt is constant.

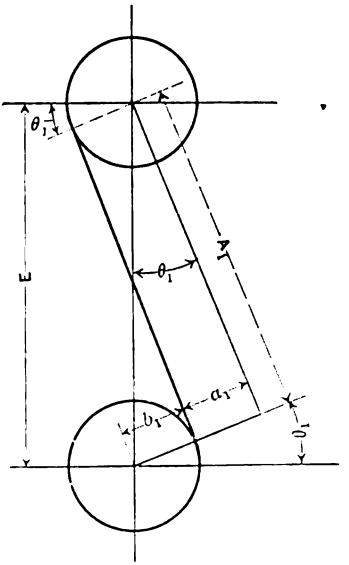

Fig. 4

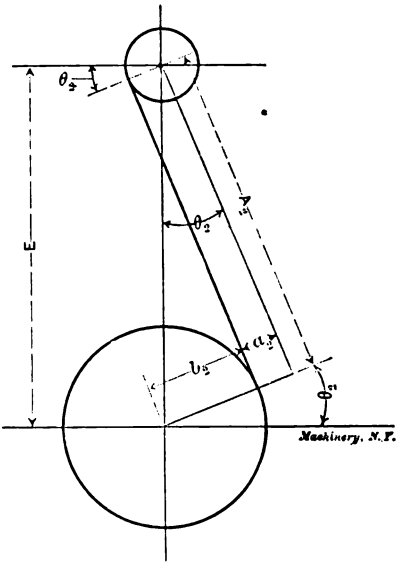

Fig. 5

Note: The subscript applied to the letters denotes that the letters are used for the corresponding quantities in a special case; thus a_1, in Fig. 4, refers to a.

The radii of the various steps may be determined graphically by the following diagram (Fig. 6):

Draw a horizontal line from A, and also draw AC making an angle of 45 degrees with it. On this line lay off AS equal to the distance between the cone centers, using any scale most convenient, bearing in mind, however, that the scale adopted now must be used consistently throughout the diagram. At S erect the perpendicular TST' to the line ASC. From some convenient point on AC, as D, drop a vertical equal to some known radius of the cone a, as DE, and then

from E measure back on this vertical the radius of the corresponding step on cone b, as EF, and from these points E and F draw lines parallel to ASC. From the point G, where the line FG intersects the line TST' drop a vertical. This will intersect the line EH in H. Through H draw the horizontal MN, O being the point where this line intersects the line TST'. Then, distances on the line MO may be taken to represent radii on cone a; and to find the corresponding radii on cone b erect perpendiculars at the extremities of these radii, producing them until they intersect the line TST'. These perpendiculars then represent the desired radii. It may be shown as follows that the sum of the two corresponding radii, as obtained from this diagram, is always a constant, and the diagram therefore satisfies the conditions for crossed belts.

Let MJ represent any radius on cone a, then JI represents the corresponding radius on cone b.

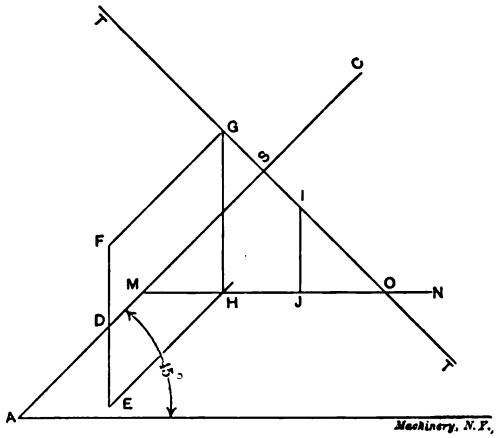

Fig. 6

The $\angle JIO = \angle JOI = 45$ degrees.

Therefore $JI = JO$.

Therefore $MJ + JI = MJ + JO = MO =$ a constant.

Dr. Burmester's diagram for open belts is a modification of the diagram just shown, the only difference being that the line TST' is replaced by a curve. This curve was determined by plotting a series of points, and after several pages of exceedingly intricate mathematics he arrives at the astonishing result that this curve can be replaced by a simple circular arc without any appreciable error.

The diagram is shown in Fig. 7, and may be drawn as follows: Proceed as in Fig. 6 until the line TST' is drawn, then lay off distance SK equal to $\frac{1}{2} AS$. Next, with the center at A, and a radius equal to AK, describe the arc XY, and the diagram is ready for use.

In order to give an idea of the extreme accuracy of the diagram, let us observe the values obtained by Dr. Burmester in his calculations.

Let $R = AK$ (Fig. 7).

When $\theta = 0$, $R = E \times 1.11815172$.

$\theta = 15°$, $R = E \times 1.11806842$.

$\theta = 30°$, $R = E \times 1.11798671$.

$\theta = 45°$, $R = E \times 1.11803397$.

The value used for R in the diagram is $E \times 1.11803397$; so the maximum error of R occurs when $\theta = 0$, and is equal to $E \times 0.00011775$,

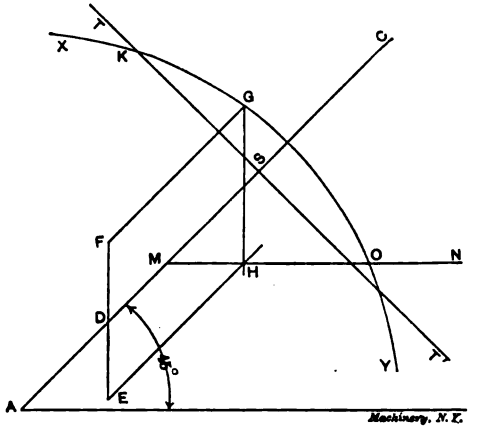

Fig. 7

which is much more accurate than the work of the most careful draftsman. Dr. Burmester gives values of R up to $\theta = 90°$, but as it is evident from Fig. 8 that it would be practically impossible to have a value of θ greater than 45°, the writer has omitted the other values.

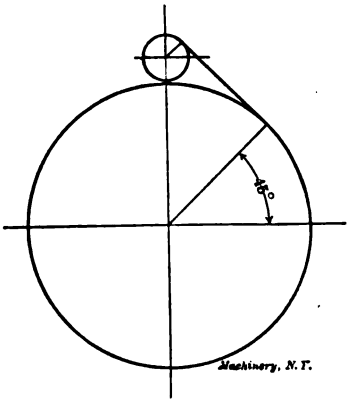

Fig. 8

In order to make the use of the diagram perfectly clear, let us solve the following problems:

Problem 1. Fig. 9

Given:

Distance between centers of cones = 3′ 4″.

Diameters of driving cone, 4", 8", 14", 20".

Diameters of driven cone, X, X, 14", X.

Required:

All diameters of driven cone.

Lay out the diagram and determine the point *M* as previously directed. Now the radii of driving cone may be laid off as abscissas or ordinates, whichever happens to be the more convenient, as the results

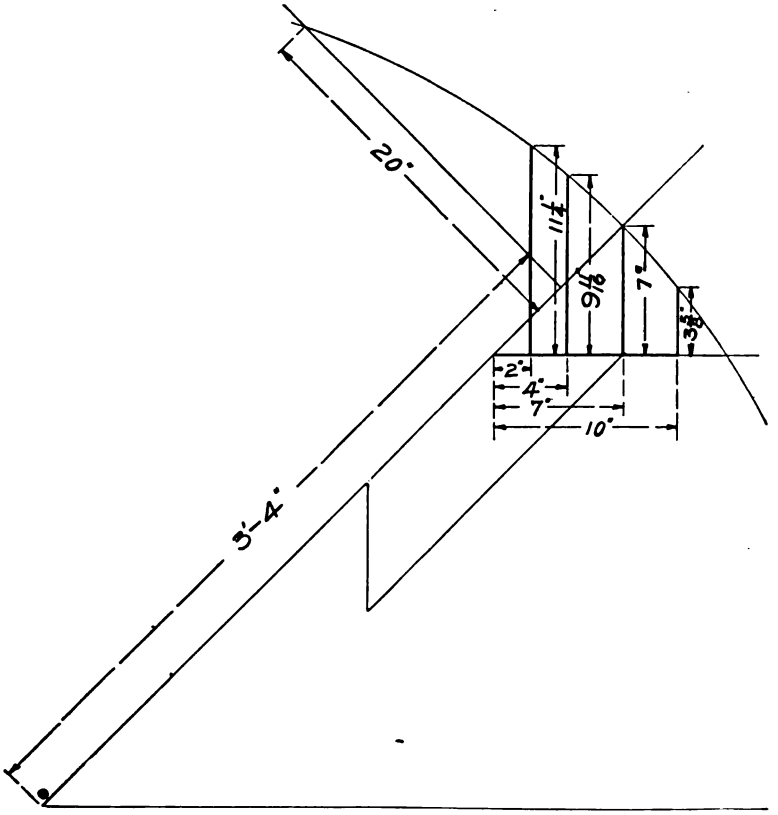

Fig. 9. Solution of Cone Pulley Problem when Diameters of One Pulley and Center Distance are Known

obtained will be exactly the same in either case. In this particular problem it is evidently more convenient to lay them off as abscissas. Then the ordinates erected at the ends of these abscissas will represent the corresponding radii of the driven cone. The problem is solved in Fig. 9 and the following results obtained:

Results:

Diameters of driven cone, 22½", 19⅜", 14", and 7¼".

This problem does not bring out all of the fine points of the diagram, so let us solve a more complicated one, in which the different steps of

the cone are to transmit given velocities.

Problem 2. Fig. 10

Given:

Distance between centers of cones = 3' 4".

Maximum velocity of belt assumed 30 feet per second.

R. P. M. of driving cone = 240.

Required:

Driven cone to make 200, 240, 400 and 580 R. P. M.

The maximum belt speed will be attained when the belt is on the largest step of the driving cone.

Therefore

$$\frac{2\pi a \times 240}{12 \times 60} = 30; \quad 2a = 28\tfrac{5}{8}"$$

$$\text{But } \frac{2b}{28\frac{5}{8}} = \frac{240}{580}; \quad 2b = 11\tfrac{7}{8}".$$

Now having obtained a value for a and b, the point M on the diagram may be found. Next draw a line from M as MO, inclined so that any horizontal projection, as MN, will be to the corresponding vertical projection, NO, as the R. P. M. of the driver are to the R. P. M. of the driven; thus,

$$\frac{MN}{NO} = \frac{\text{R. P. M. of driving cone}}{\text{R. P. M. of driven cone}}.$$

Also from similar triangles

$$\frac{MN}{NO} = \frac{MN'}{N'O}.$$

But we know that

$$\frac{\text{R. P. M. of driving cone}}{\text{R. P. M. of driven cone}} = \frac{\text{rad. of driven cone}}{\text{rad. of driving cone}}$$

Therefore MN' equals radius of driven cone, while $N'O$ equals radius of driving cone, thus making, for this case, radii of driving cone vertical and of driven cone horizontal. The problem is solved in Fig. 10 and the following results obtained:

Results:

Dia. or driving cone, 28⅝", 23⅝", 20¼", 11⅞".

Dia. of driven cone, 11⅞", 15⅛", 20¼", 28⅝".

We have seen that the Burmester diagram is under all conditions much more exact than is required in practice; and a more compact, simpler, or quicker method of finding cone pulley radii could not be desired. An experienced draftsman should be able to solve a problem like No. 2 above in less than 10 minutes, while to obtain the same results by an analytical method would require as many hours. Results of sufficient accuracy can usually be obtained by making the diagram to half scale, although there is no reason for reducing the scale, unless the distance between centers is inconveniently large, and in that case

the results do not need to be so accurate, as the belt will stand more stretching.

Another graphical method for laying out a pair of cone pulleys is as follows: First draw straight line *A A*, Fig. 11, supposed to connect the centers of the cones to be laid out; then set off the centers of the cones *B* and *C* on line *A A* (full size is best); then bisect the distance

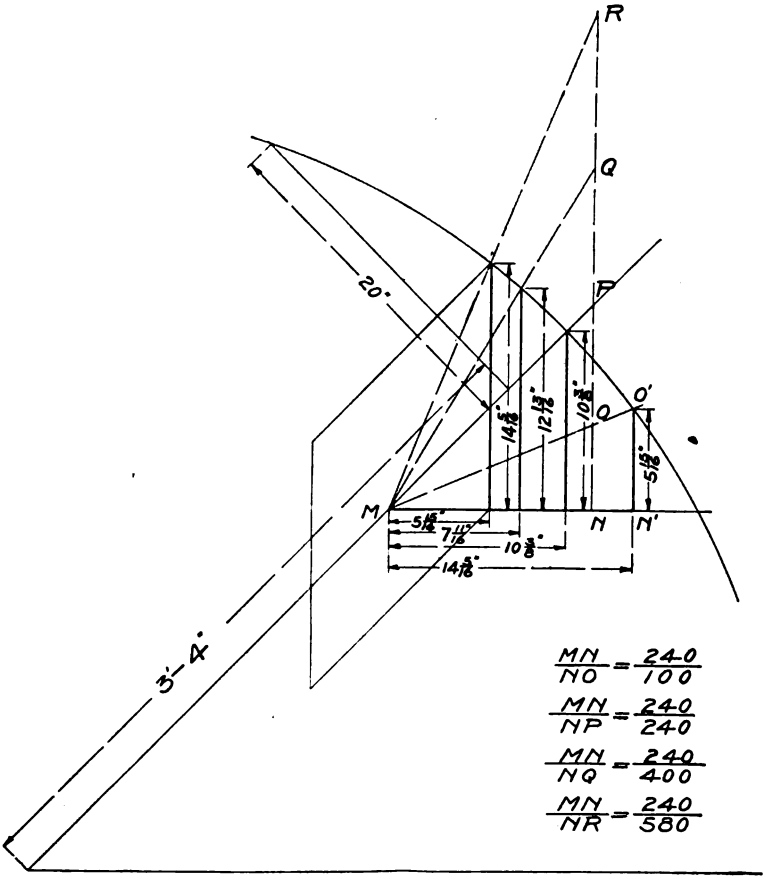

Fig. 10. Solution of Cone Pulley Problem when Velocity Ratios, Maximum Belt Speed, Center Distance, and R. P. M. of Driver are Known

between the centers of the cones and draw perpendicular line *D E*. Now assume the size of the two cones—say the largest is 25 inches and the smallest 3 inches diameter. Then draw a line tangent to the circles, or the line representing the inside of the belt *G*, which will intersect the line *D E* at *E*, and taking the point *E* for a center scribe the circle *F*. Then divide the circle *F*, commencing at the line of the belt *G*, into as many parts as needed, of a length to suit the required speeds.

Draw the other radiating belt lines through the point *E* and the divisions on the circle *F*, extending them toward the cone *B*, and they will be the inside of the other belt lines. Draw circles tangent to these

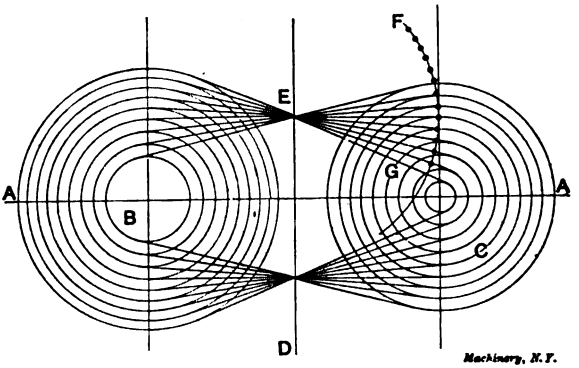

Fig. 11. Simple Graphical Solution of Cone Pulley Problem

lines. We now have all the diameters of the rest of the steps of the cone to match the first, and the belts will correctly fit all the steps. This is, of course, only an approximation rule. This method was contributed to the June, 1905, issue of MACHINERY by John Swanberg.

CHAPTER III

STRENGTH OF COUNTERSHAFTS*

There is scarcely a shop in existence which has not had a more or less serious accident from a countershaft some time in its history. It may have been caused by a heavy pulley running very much out of balance, or the shaft may have been bent in the beginning. Possibly the shaft was too light, or too long between hangers. The latter is responsible for most of the trouble, and is the one with which this discussion is principally concerned.

There are two methods in vogue for turning cones and pulleys; one is to set the rough casting to run true on the inside, and the other on the outside. This latter method makes a cheaper and an easier job, but when turned, it requires an enormous amount of metal to balance it. And here is the source of considerable trouble. We may balance a large cone perfectly on straight edges, but that is a standing balance only; and when the cone is put in place and speeded up to several hundred revolutions per minute, it shakes, and shows that it is decidedly out of balance. The trouble is that we have not placed the balance weights directly opposite, or in the plane of the heavy portion of the cone. The result is that neither weight, when rotating, has its counterbalance pulling in the same line, and, of course, the pulley is sure to be out of balance. All cones and all other pulleys which have a wide face should be set to run true on the inside before turning.

A certain countershaft failed because it had been welded near the center. The weld twisted and bent open, and some one was badly injured by the fall. A weld in machine steel is so very uncertain that it should never be trusted for such a purpose. The extra expense of a new shaft would not warrant the hazard of such a risk.

In the calculations which follow, the spring of the shaft is limited to 0.06 of an inch. There are plenty of countershafts which have been running for years with about this much spring. Now, from the general formula for the deflection of a simple beam, we have:

$$\text{The deflection, or spring} = \frac{W L^3}{48 E I}$$

in which W = the load at the center in pounds.

L = the length between center of hangers in inches.

E = the coefficient of elasticity = 29,000,000.

I = the moment of inertia of the cross-section of the shaft.

For a round shaft,

$$I = \frac{\pi d^4}{64} \qquad (1)$$

* MACHINERY, April, 1903.

in which d = the diameter of the shaft in inches. We then have:

$$\frac{W L^3}{48 E I} = 0.06 \qquad (2)$$

From (1) and (2), we have $\frac{64 W L^3}{48 E \pi d^4} = 0.06$, and

$$L = \sqrt[3]{\frac{0.06 \times 48 E \pi d^4}{64 W}} = \sqrt[3]{\frac{0.06 \times 48 \times 29{,}000{,}000 \times \pi}{64}} \times \frac{d^4}{W}$$

$$= \sqrt[3]{4{,}100{,}000 \frac{d^4}{W}} \qquad (3)$$

Fig. 12 shows a countershaft which is in actual service, and which is known to be all right. A and B are keyed to the shaft. C and D are

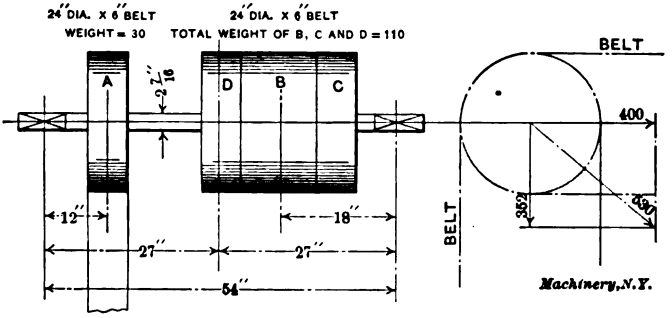

Fig. 12

loose pulleys arranged for open and cross belts.

A weighs 30 pounds, and B, C and D weigh 110 pounds. The belts run as shown in the figure. If A weighs 30 pounds, and the centers of the hangers are 54 inches apart, then by taking the left-hand hanger as the center of moment, we have $30 \times 12 = x \times 27$, when x is the weight at the center. Solving we find

$$x = \frac{30 \times 12}{27} = 13$$

In the same way, by taking the right-hand hanger for the center moment, we find that

$$x_2 = \frac{110 \times 18}{27} = 73$$

As to the belt pull, it is possible for a single belt to run up to 70 pounds per inch of width of belt, and a double belt can be taken at 100 pounds. As a double belt is used in this case, and as the slack side of the belt is very loose when the tight side is pulling its maximum, we will take the pull at the pulley $A = 6 \times 100 = 600$ pounds, and getting this in terms of a load at the center, we have

$$x_3 = \frac{600 \times 12}{27} = 266$$

and the downward pull is $13 + 73 + 266 = 352$.

The pull at the pulley B will be $6 \times 100 = 600$, and by transferring this to the center we have

$$\frac{600 \times 18}{27} = 400$$

The resultant of these two forces will be the diagonal of the force diagram, and is equal to 530 pounds, which is equal to W in the formula. Introducing these terms in equation (3) we have

$$L = \sqrt[3]{4{,}100{,}000 \frac{(2.44)^4}{530}}$$

and by solving we find $L = 65$, which means that for this condition of loading the countershaft would be safe even with the hangers 65 inches apart.

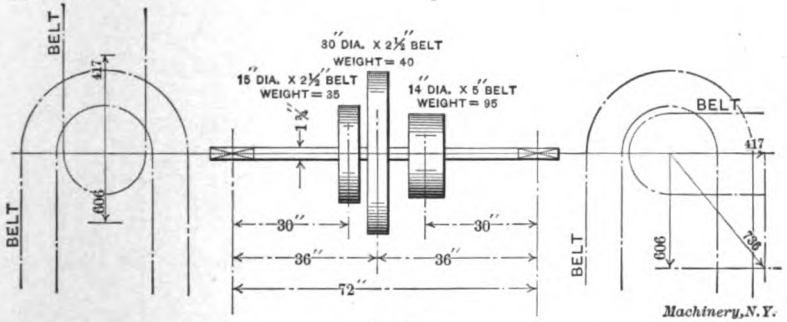

Fig. 13

Fig. 13 represents another countershaft taken from actual service. It is belted as shown on the left-hand view, and is running all right, although it looks rather flimsy, and one would consider it unsafe. Taking the moments of the weights of the pulleys and belt pull about the right- and left-hand supports, and finding the equivalent pull at the center, we obtain:

Weight at center due to pulleys =	148
Pull on 30-inch pulley $= 2\frac{1}{2} \times 100 =$	250
Pull on 15-inch pulley $= 2\frac{1}{2} \times 100; \frac{250 \times 30}{36} =$	208
Total downward pull =	606
Pull on 14-inch pulley $= 5 \times 100; \frac{500 \times 30}{36} =$	417
Resultant downward pull =	189

Introducing this value of W in equation (3) we have,

$$L = \sqrt[3]{4{,}100{,}000 \frac{(1.75)^4}{189}} = 59$$

This is considerably less than the distance between the hangers, and it shows that it is not safe to place the hangers in this way. If the

belts ran as shown at the right-hand side of Fig. 13, we would then have:

Weight due to pulleys (as before) =	148
Pull on 30-inch pulley =	250
Pull on 15-inch pulley =	208
Total downward pull =	606
Horizontal pull on 14-inch pulley =	417

From these two forces we find a resultant of $W = 736$. Substituting this in (3) and solving as before, we find $L = 38$, which is the greatest safe distance between hangers for this condition of loading.

There are cases where one must have an extra long shaft in order to work in the pulleys, cones, etc., as shown in Fig. 14. Here the downward loads amount to 820 pounds, and the pull at right angles amounts to 360 pounds. The resultant 895 pounds = W.

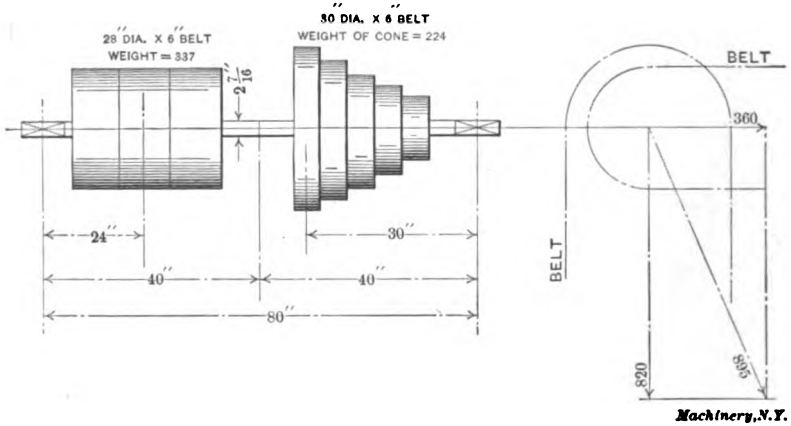

Machinery, N.Y.

Fig. 14

Introducing in the formula we have

$$L = \sqrt[3]{4{,}100{,}000 \frac{(2.44)^4}{895}} = 55$$

This means that for this condition of loading, the center distance should not exceed 55 inches, and since in this case it could not be made as small as this, the pulleys should be arranged for a third hanger.

In every case, therefore, where the centers are so far apart as formula (3) would indicate to be unsafe, a third hanger should be used. If all the flimsy countershafts had a third hanger added to them there is no doubt but that the number of accidents would be greatly diminished. In the above calculation the weight of the countershaft has not been considered, as it is usually very small. If the belts run at any other angle than that shown, the construction is made in exactly the same way, using the required angle instead of a right angle, the resultant of the two forces being used as W in the formula.

CHAPTER IV

TUMBLER GEAR DESIGN*

Of the different mechanisms that have been used in the machine tools of the past, one—the tumbler gear—could be found in some form or other in almost every machine. Its office, in most cases, was to reverse the direction of the feed. Fig. 15 shows the usual form in which it is found when used for this purpose. The gears *A* and *B* are to be connected so that motion may be transmitted from one, which runs constantly in one direction, to the other, which it is desired to

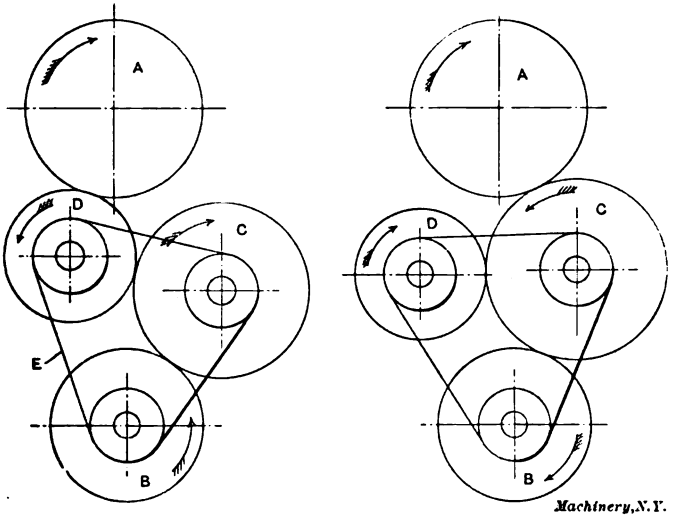

Figs. 15 and 16. Examples of Tumbler Gears

run in either direction. Suppose that *A* is the driver and runs as shown by the arrow. As connected, *A* drives *B* through the intermediate gears *D* and *C*, *B* rotating in an opposite direction to *A*, as shown by the arrows.

This mechanism is termed the tumbler gear, because the gears *D* and *C* are supported in a frame which swings about the axis of either the driving or the driven gear. In the case in hand, the intermediate gears are carried in the frame *E*, which rotates about the axis of the gear *B*. Some means, not shown, must be provided by which the rocker frame may be changed from one position to the other, and locked. Fig. 16 shows the mechanism shifted so that the motions of *A* and *B* are in the same direction.

The tumbler gear has been used as a reversing gear ever since present forms of machine tools were first invented. While it has always

* MACHINERY, December, 1907.

given considerable trouble, it has shown up to disadvantage mostly when applied to the modern machine with positive gear feed, where great power has to be transmitted by it. It is the purpose here to show where this gear may be used to advantage, and also to explain the theory on which the principles of its design are based.

All of us have met with this mechanism in some form or other, and may have formed an unfavorable opinion. The prejudice thus created keeps us from fully appreciating the tumbler gear, even when properly designed, and when used in the right place. It has been placed by many along with the worm drive and the spiral gear as undesirable, and to be avoided unless it is absolutely impossible to get along without it. This opinion has been responsible for the adoption of many combinations used for purposes that rightly belong in the field of the tumbler gear, and many times, in order to avoid using this mechanism, much unnecessary complication has resulted.

What are the faults of the tumbler reversing gear? That one on So-and-So's lathe used to kick furiously when one tried to throw it over. Then, the one used on the milling machine used to go into mesh easily enough, but when any amount of strain was put onto it, the teeth used to crack and growl, showing that the tendency was to drag the gear farther into mesh, causing the teeth to bind on one another and sometimes break. Let us look into the case represented in Fig. 15. Fig. 17 shows the gear *D* just entering into mesh with *A*. An examination of this figure shows that the tendency is for the teeth of gear *A*, when they strike those of gear *D*, to cause the latter to rotate about the axis of the rocker frame, should the gear *B* be locked against turning. This tendency opposes the motion in the opposite direction necessary to bring the gears wholly into mesh. In practice *B* is not locked, but it is necessary to overcome a certain amount of resistance in order that it may be set in motion, and the presence of this resistance has the same effect as if the gear were locked. The greater this resistance is, the greater is the effort necessary to bring the gears into working position.

Examining the conditions in the case of Fig. 16, we see that the effect would be just the opposite, that is, the gears would come into mesh of their own accord as soon as a contact is produced between the teeth of *A* and *C*. Practically no effort is necessary to bring the gears into mesh, but, in order to withdraw the gear *C* from *A*, considerable effort would be required. When the gears *C* and *A* are in mesh and transmit power, the tendency for gear *C* is to crowd farther into mesh with *A*, which has the effect of binding the teeth. Should the pressure of contact be sufficient, the binding tendency would cause the motion to cease, or would break the teeth. This is one of the points on which many have based their verdict against the tumbler gear, and when designed so that such results are obtained, it is not to be wondered at.

Direction of Tooth Pressure in Ordinary Cut Gears

The first consideration in the design of tumbler gears in any form is that of tooth pressure and its line of application. As all cut gears

used in machine tools are made to the 14½-degree involute system, we will confine ourselves to that system. In this, the force tending to revolve the driven gear is not a tangential force, applied as a tangent to the pitch circle, but is a force applied at an angle of 14½ degrees to the tangent of the pitch circle, this 14½-degree line being termed the line of pressure. In case that there may be some confusion as to the above statement regarding the tangential force and the line of pressure on the teeth, the case is graphically shown in Fig. 18. The tangential force is equal to the twisting moment divided by the radius of the pitch circle. This force is equivalent to that which transmits motion between two disks by friction alone, the diameters of the disks being equal to the pitch circles of the gears. This force is, in the case of a gear, resolved into two component forces. One component acts perpendicular to the tangential force and tends to force the gears apart; the other acts in the direction of the line of tooth pressure shown in Fig. 18. The tooth pressure thus is somewhat less than the

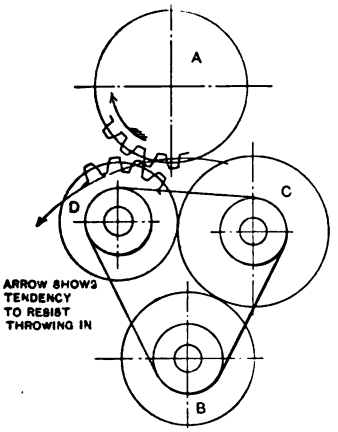

Fig. 17. Illustrating the Tendency to resist Throwing-in of Gear

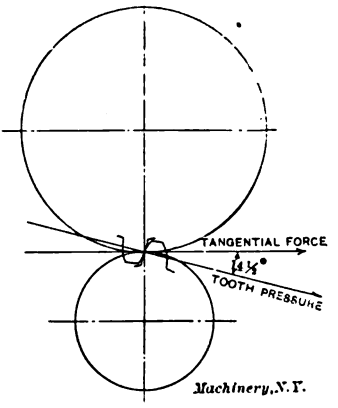

Fig. 18. Illustrating the Direction of Line of Pressure

total twisting force, and equals the twisting or tangential force multiplied by the cosine of 14½ degrees.

Influence of Direction of Tooth Pressure on Tumbler Gear Design

To show what effect the line of pressure has upon the layout of the tumbler gear, we will use the simple case shown in Fig. 19. In this figure, *A* is the driving gear and *B* is the driven gear. These gears are connected by means of the intermediate gear *C*, which is carried in the swing frame *E*, which, in turn, swings about the axis of *A*. This mechanism is a simple case of tumbler gear, and while it is little used, it is useful as a means for disconnecting a train of gears when it is desired to stop the motion of the driven section. If we consider gear *B* locked in the position shown, and exerting a turning effort on the gear *A* in the direction indicated by the arrow, this effort is transmitted by the teeth of *A* and *C*, and a pressure is produced

between the teeth of *B* and *C*, two of which are shown in the cut. The direction in which this force is applied is shown by the line of pressure *H K*, and is is exerted in the direction of *H*. Since every force is opposed by an equal and opposite force when in a state of equilibrium, we have in this instance a force or reaction opposing the force along the line of pressure referred to. It is this reaction that causes our troubles. In the mechanism shown in Fig. 19, the gear *C* and the link *E* are free to rotate about the axis of *A*, and since the line of pressure does not go through the center of gear *A*, the force acting along this line tends to rotate the arm *E* about the axis of *A*, the direction of rotation being dependent on which side of the center of *A* the line falls. Thus in Fig. 19, the line falls in a position that produces a tendency for the arm to force the gear *C* further into mesh with *B*. The twisting moment thus set up is equal to the tooth pressure multiplied by the normal distance from the axis of *A*, or *G L*.

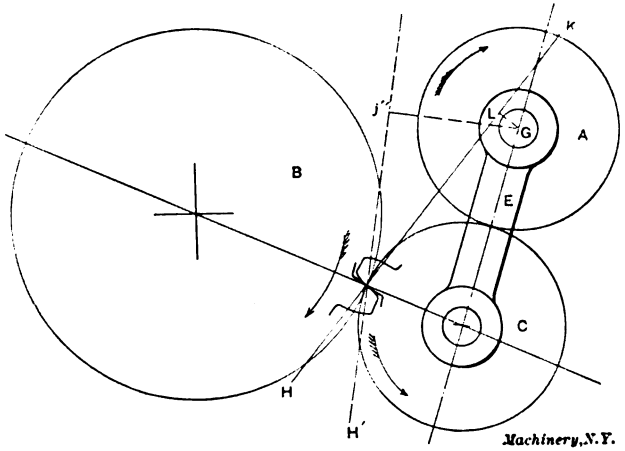

Fig. 19. Objectionable Tumbler Gear Design

If now, instead of trying to turn the gear *A* in the direction of the arrow, we exert a torque in the other direction, the opposite sides of the teeth would come into contact, and the line of pressure would be located as shown by the dotted line *H' K'*. The normal distance of this line from the axis of *A* is much greater than in the former case; consequently the twisting moment tending to rotate the arm *E* about the axis is also increased, but the direction in which the torque is applied has changed the direction in which the reacting force along the line of pressure acts, and, since this line falls on the same side of the axis, the tendency of the arm is to rotate in the opposite direction, and to separate the gears *C* and *B*. Had the line of pressure gone directly through the axis of the gear *A*, where *E* is pivoted, the effect of any force acting along it would have had no rotating influence upon the tumbler gear arm. That this would be the ideal case needs not to be mentioned, and it should be the aim of the designer to approach that condition as nearly as possible.

The tendency for the tumbler to crowd the gears into mesh might be of some advantage were it desirable to throw them into mesh while the gears are in motion; but in cases where any considerable amount of power is being transmitted, a very stiff and rigid design will be necessary for the tumbler frame and the locking device. It is also well in such cases, when setting the locking device, to have the gears mesh with plenty of play or backlash, so that, if there be any spring in the frame, the gears will not be likely to bind and cramp. Should *B* be the driver and run in the direction of the arrow, the line of pressure would be *H' K'*, and the pressure would be in the direction of *H'*. The arm would then tend to carry the gear *C* out of mesh with *B*.

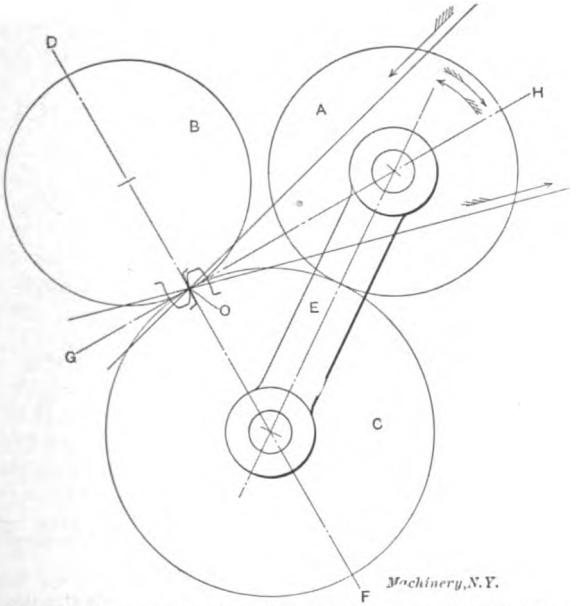

Fig. 20. Correct Design of Tumbler Gear to run in Both Directions

Should the direction be reversed, *H K* would be the line of pressure, and the tendency would be to crowd the gear in.

The layout in Fig. 19 has two bad features. In the first place, the gears have a tendency to crowd farther into mesh, which limits the amount of power that can be transmitted, and increases the liability of breakage of the gear teeth and of the tumbler frame, should an overload be imposed upon the mechanism. Inaccuracy in the shape and spacing of the teeth aggravate the above conditions. In the second place, the mechanism should be used to transmit motion in but one direction.

In most cases the throwing in or out of the tumbler is a secondary matter, as it is done either when the gears are not in motion, or while not under load, if running. In such cases it should be the aim of the designer to overcome the objection of the crowding of the teeth into

mesh by having the line of pressure properly located, so that the tendency is in the opposite direction. When it is desired to provide a tumbler gear that can be run in either direction, the layout in Fig. 20 is recommended. The object in this case is to have the twisting moment equal in either direction, and such that the gears have no crowding tendency. The arrangement in Fig. 20 is laid out as follows: Draw the pitch circles of the gears *B* and *C* and connect their centers by the line *D F*. Through the pitch point *O* draw a line *G H* normal to *D F*. Then locate the gear *A* at some point on *G H* so that its pitch circle will be tangent with that of *C*.

The Single Tumbler Gear

The single tumbler gear is the basis of many of our modern rapid change speed and feed mechanisms, and the principles treated above apply to this as well as to the regular tumbler gear. Take the simple case shown in Fig. 21, which shows the pitch circles of a four-gear

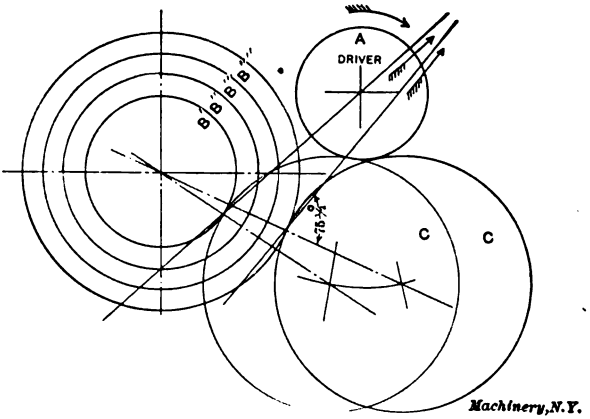

Fig. 21. Single Tumbler Gear in a Feed Box

cone and the driver *A* and tumbler gear *C*. It is evident that only one position of the gear *C* can be such that the ideal condition prevails, that is, only when in mesh with one gear of the cone can the line of pressure pass through the axis of the tumbler frame. Fig. 21 shows this to be the case when *C* is in mesh with the gear *B'*. Each subsequent shifting of the tumbler along the cone brings the line of pressure eccentric to the axis, until the position of extreme eccentricity is reached when *C* is in mesh with *B''''*. In mechanisms of this kind, it should always be the aim of the designer to have the line of pressure pass as close to the center of rotation of the tumbler frame as is possible, because the locking devices used with this type of tumbler gear are necessarily of such a design as to be quick in action, and in consequence are not very stiff or rigid. The line of pressure should always be made to fall on that side of the axis where the tendency is to separate the gears rather than to bring them closer together. When the gear *C* is supported in a swinging frame which does not

slide in a lateral direction, but the changes are made by shifting *C* along an intermediate shaft, the supporting member should be located at the end where the line of pressure has the greatest eccentricity, as the greatest strain comes at that end. Thus, in Fig. 21 the support should be at the same end as *B''''*. The diameter of the intermediate gear *C* has an important effect on the location of the line of pressure. It will be found that it should in most cases be as large as *B''''*, in order that the line of pressure may come right. However, no exact rule can be given by which the diameter of *C* can be calculated, as it depends greatly on the difference in the diameters of *B'* and *B''''*, and also on the diameter of *A*.

Rules for the Design of Tumbler Gears

What direct rule can be given that may be used as a guide in laying out the tumbler gear? Referring to Fig. 19, we see that the gear *C* is revolving in a direction away from the axis of the tumbler at the point of tangency of the pitch circles of *C* and *B*, and that the reacting force tends to crowd the gears farther into mesh. Had this line of pressure fallen on the other side of the axis of the tumbler frame, the tendency would have been opposite in effect. When the gear *C* is revolving so that a point on the pitch circle travels away from the pivot of the tumbler, and the line of pressure falls somewhere between the pivot point and the axis of the driven gear *B*, the tendency will be to crowd. From this we therefore may formulate the following rules:

Rule I. When the gear about which the tumbler gear swings is the driver, and the line of pressure falls between the axis of that gear and that of the driven gear, the motion of a point on the pitch circle of the tumbler or intermediate gear, when near the contact point, must be toward the axis of the tumbler frame. Should the direction of a point on the pitch circle be opposite, the line of pressure must fall outside of that area included between the axis of the pivot gear and the driven gear.

Referring again to Fig. 19, it is seen that should the driving gear be *B*, the above rule does not apply, but may be altered to read thus:

Rule II. When the gear about which the tumbler gear swings is the driven gear, and the line of pressure falls in the space between the axis of this gear and that of the driving gear, the motion of a point on the pitch circle of the intermediate gear at the contact point must be away from the axis of the pivot gear; when the line of pressure falls outside of this space, this motion must be reversed.

By following these two rules, more as a precaution than as a compulsory condition, much better success may be expected in the results obtained.

CHAPTER V

FAULTS OF IRON CASTINGS*

POINTS FOR THE MACHINE TOOL DESIGNER

The most useful and indispensable of all the materials with which the designer has to do, is cast iron. Of all the metals used in the construction of machinery, it is the cheapest. It is the one to which we can the most readily give the form and proportions which we desire. It is, of all the common materials, the most easy to machine. While it is lacking in strength and ductility, its cheapness makes it possible to use it in such ample quantity as to overcome these disadvantages, and in many constructions it may be so shaped and proportioned, or so reinforced by other materials, as to make this lack but a slight detriment. It is therefore a matter of interest to the designer to learn of the various faults to which this valuable material is subject, and the best ways in which they can be avoided or minimized.

Causes of Blow-holes

Probably the one fault which spoils more castings than any other, is the result of an outrush of gas from the materials of the cores or the mold, into the molten iron, at the instant of solidification. If the solidification of the iron has proceeded so far that the outrushing gas or steam cannot bubble through it, and escape through the vents which should be provided for the purpose, it will be imprisoned in the substance of the casting, forming one or more holes, according to the special shape of the casting, and the quantity of the escaping gas. These holes, which are known as blow-holes, may not be apparent on the outside, and quite often occur in such a location that they do no particular harm, but it is more often the case that they occur at some point where they become apparent when the metal is being cleaned, or where their presence weakens the casting greatly.

Steam from Moisture in Sand

The gases which cause blow-holes may come from three sources. They may be, and generally are, caused by the generation of quantities of steam from the moisture contained in the molding sand, by the heat of the iron. In the case of dry sand and loam castings, the quantity of steam so generated is so insignificant, if the molds have been properly heated, that it gives no trouble whatever. In the case of green sand castings, however, the moisture present, and therefore the steam generated, is quite large in amount, and special precautions have to be taken to prevent blow-holes.

When the molten iron pours into a green sand mold, all the moisture in the layer of sand immediately in contact with the iron will at once be transformed into steam. The depth of the sand layer so affected

* MACHINERY, October and November, 1907.

depends on the thickness and extent of the fiery mass to which it is adjacent. The steam so formed must either force its way through the molten iron in the form of a mass of bubbles, or else it must escape through the sand. To facilitate its escape, the mold is vented. That is, after the damp sand has been packed around the wooden pattern by ramming it closely into place, a wire is thrust repeatedly into the mold, making numerous passages for the escape of the steam and gas.

It is obviously impossible that one of these vent-holes should extend to every point in the layer of sand adjacent to the casting, so it is necessary that most of the steam and gas should force its way for some small distance through the sand, before it can reach a vent-hole. This it can only do when the sand is somewhat porous. If the sand is too tightly rammed, it will lack the necessary porosity, and even though it be unusually dry, and the venting carefully done, the casting will be full of blow-holes. Cases have occurred where molds have been rammed so hard that the castings were nothing better than shells, the whole interior being a mass of blow-holes.

Decomposition of Binder in Cores, and Entrapping of Air

The second cause of blow-holes in iron castings is the decomposition of the material, generally flour or molasses, used as a binder in preparing the cores, and its escape in the form of gas, into the iron, at the instant of pouring. It is impossible to prepare and bake a core in such a way that it will not give off large quantities of gas when the iron is poured, and so means must be provided for the escape of this gas. In order to do this, the cores are prepared with wax strips running through them. When the core is baked, the wax melts, leaving passages, known as core vents, for the escape of these gases. If the core is of such form, and so set in the mold, that the gases can escape from these vents in an upward or sidewise direction, and leave the mold without forcing their way through the molten iron, no blow-holes will result.

A third source of blow-holes is the entrapping of air in certain parts of the mold, and its mixing, on expansion, with the iron. This trouble is due to insufficient venting of the mold, and is not a fault to which the designer need pay any particular attention.

Dry Sand or Loam Advisable for Large Complicated Castings

In the case of large and complicated castings, it is generally advisable to make dry sand or loam castings, in order to avoid, as far as possible the chance of blow-holes. When the mold is very large, it is difficult to vent it thoroughly, and when the work on it extends over a period of three or four weeks, it is impossible to keep the vents from filling up; hence the general use of dry sand work for large castings. Often, however, for the sake of economy, fairly large and complicated pieces must be undertaken in green sand, and it becomes a matter of importance that they be so designed that the molder will not be compelled to invite disaster by keeping his sand too wet, or ramming it too hard, and that there be no part of the mold which may not be thoroughly vented.

Elements of Green Sand Molding

In order that we may understand thoroughly the effect of the design of a casting on the probability of blow-holes, it is necessary that we review, in a brief way, the elements of green sand molding. The sand is sprinkled with water, and thoroughly mixed and sifted, preparatory to packing or "ramming" it around the pattern. The object of wetting the sand is of course to cause it to stick when it is packed. Up to a certain point, the wetter it is, the better it will stick, but the molder should not wet it any more than is necessary. In the same way, the more tightly the sand is rammed, the better its particles will cohere, and the more easily will the mold be handled, and the pattern drawn. However, tight ramming and wet sand, while they make a solid and easily handled mold, invariably produce blow holes, and are therefore to be avoided.

It will be apparent then, that if a pattern be of complicated form, or hard to draw, or if when it is drawn it leaves the sand in such a form that the mold will easily fall together at a little jarring, the molder will be compelled to wet the sand more and to ram it harder than usual. Small, deep openings, sharp fillets, and thin walls and partitions of sand, are especially troublesome. Not only do they make it difficult to draw the pattern, and handle the mold, and so make excessive wetting and hard ramming imperative, but they cause spots in the mold which the venting wire is unlikely to reach. For these reasons, they are to be avoided when possible, in any class of molding, whether it be green sand, dry sand, or loam work, and on no account should such work be permitted in the case of large green sand castings.

When designing a casting to be made in green sand, the designer ought to know the position which it will occupy in the mold, when it is poured. In general, the parts of a casting which lie in the bottom of the mold will be the soundest, and those parts which must be machined, or which require the greatest strength, should therefore occupy the bottom of the mold, if possible, when the casting is poured. Having decided which side will be down, the designer needs generally to pay no particular attention to the configuration of the lower part of the mold, provided only that all of the pattern can be drawn, and that there are no sand partitions which overhang, or whose extent is large in proportion to their thickness. To insure a sound casting, the sand in the lower parts of the mold must be comparatively dry, and loosely rammed. This condition of affairs is not generally hard to attain, since all the work on the sand is done with the pattern in place, and that part of the mold is not generally moved or handled after the support of the pattern has been withdrawn. In the lower part of the mold, the sand is generally supported at all points in a very thorough manner by the sand lying under it, and so hard ramming or wet sand is unnecessary. If, however, the pattern must be made with loose pieces, or with sharp fillets, or must leave thin walls or tongues of sand when it is withdrawn, the case is changed. Then hard ramming and wet sand are almost compulsory, and the molder

is not to be blamed if he does not produce sound green sand castings. The fault is with the designer.

The upper part of the mold must of necessity be rammed harder than the lower part, since the sand is not supported from beneath, but hangs from above. This is not as great a disadvantage as it might seem to be at first sight, since the escaping gases do not have to make their way through the iron, as they would if they were given off by the sand in the lower part of the mold. The venting, however, must be just as thorough, and it is desirable that the sand should be as dry as possible. The whole arrangement of the upper part of the casting should be such that the sand may be well supported from above. Generously rounded fillets and corners, simple surfaces, plenty of "draft," and an absence of depending walls and masses of sand, make the mold easy to handle, and therefore promote freedom from blow-holes.

When Green Sand and Dry Sand Both May Be Used

It often occurs that the larger part of a casting is of simple form, and easy to mold. A certain part of it, however, may be of a form exceedingly difficult to mold, and therefore likely to give a great deal of trouble. It is not necessary that the whole casting should be made in a dry sand mold, but a core-box may be made to take care of the difficult part of the work, even though the work would ordinarily be done without a core. It is just as easy, and often just as desirable to cast the external face of a casting against a core, as the internal face. While it may not pay to do this if only one casting is wanted, if a great many are wanted it is often the cheapest possible way of making them, and reduces to a minimum both the work of the molder and the chance of a spoiled casting. Often forms may be cast in this way which could not be attempted in any other. If it is desirable to use this method of working, the designer has it in his power to make the construction of the core-box much simpler and cheaper than it might otherwise be, by giving the matter a little thought.

In arranging the coring of a mold, it is always better, if possible, to support the cores at the top. The gases formed in the core, being light, tend to rise, and if the core is supported at the bottom only, they tend to escape into the iron, and to bubble through it. If they can escape at the top, they will pass off without coming in contact with the iron. When it is impossible to support the cores at the top, they should be so arranged that the gases can pass off at the sides, and escape from the mold without coming in contact with the iron.

Sponginess

A second fault to which iron castings are subject is that of sponginess. Sponginess is due to the formation of gas bubbles in iron, at the instant of solidification. In all ordinary cases this is due to an improper mixture of iron. However, if the casting is very thick at one place, and thin at most others, it will be impossible to obtain a mixture which will have satisfactory properties for general work, and not be spongy at points of extraordinary thickness. It is an excellent

rule to allow no part of a casting to be at a greater distance from a sand surface than 2½ inches. In case this rule is strictly adhered to, and the castings are of fairly uniform thickness no trouble will be experienced from sponginess, except from the use of poor iron. When, however, we are obliged to concentrate a considerable quantity of metal at one place, and give it a greater thickness than 5 or 6 inches, either we must take care that it will be at some point where the sponginess will do no harm, or else we must make provision to do away with it.

The only practical method for doing this is to place a riser immediately over the heavy spot. When the metal is poured, and the riser is full, a rod of wrought iron is inserted and worked up and down until the metal has almost solidified. By so doing, the bubbles have a better chance to escape, and the iron is left perfectly solid. Of course, it is not possible to use a riser effectively in this manner, unless it can be placed directly over the heavy spot. A riser at a point a few inches distant is useless. The use of a riser in this way, and for this purpose, is unnecessary when the part of the casting in which the heavy spot occurs is subject to no particular stress, or is not required to be tight under steam, air, or hydraulic pressure, but nevertheless, a spongy spot is a defect in a casting, which should, if possible, be avoided.

Shrink-holes

A third fault to which iron castings are subject is that of shrink-holes. A shrink-hole is a cavity in a casting caused by the shrinking away of the metal in cooling. Like sponginess, this defect is especially likely to occur in those parts of a casting which are excessively thick. To avoid this fault, it is best to avoid sudden changes in the thickness of a section. If the part of a casting which is unusually thick does not have to be machined, the difficulty may be overcome by placing in the mold at that point a piece of iron, so that the casting will be caused to solidify at that point first, on account of the chilling effect of the cold iron. If, however, the heavy spot in the casting has to be machined, or if it is subject to heavy stress, this method of preventing shrink-holes is to be avoided, since the chilling of the iron makes it so hard as to be impossible to cut with a tool, and at the same time creates stresses within the metal which weaken it. In such a case, shrink-holes are best prevented in the same manner as has already been described for the prevention of sponginess, namely, the use of a heavy riser, and the working of the iron with a rod when it is cooling.

The designer must therefore avoid heavy spots in castings, whenever possible, for the reason that they are likely to produce two serious faults, sponginess and shrink-holes. He must avoid them especially in those parts of castings which are to be machined or which are subject to heavy stresses. If they cannot be avoided entirely, in such a case, they should be so arranged that risers may be placed immediately over them, so that a rod may be inserted into the riser, and into the heart of the spot where the metal is thickest.

Scabbiness

A fourth fault often encountered in iron castings is that of scabbiness. Although iron in the molten condition does not permeate the sand of the mold, as water would if it were poured in, nevertheless, on account of the great weight of the fluid, it has a considerable erosive action on the materials of the mold. If, as it flows into the mold, the iron eats away fillets or partitions, or scours away patches of sand, it is obvious that the casting will not be of the proper form, but will have its angles partly filled up, and unsightly protuberances upon its surfaces. Such imperfections as these are known as scabs. The sand so washed from its proper place may float on the iron, and rise to the top of the mold, where it forms a dirty mixture, which, when cleaned away, leaves a rough depression in the surface of the casting, also known as a scab.

The remedy for this trouble is to avoid as far as possible sharp fillets, and thin tongues of sand, projecting into the mold, and to so gate the casting that the current of iron, as it enters the mold, will spread itself out, and not concentrate itself in any particular direction, for if it does, it will eat away the part against which it flows, just as quickly and surely as would a current of water. In general, proper gating is a matter which must be attended to by the molder, but if the designer has arranged things so that proper gating is inconvenient or impossible, the castings will almost surely be scabby.

Sand-holes

The fifth fault to which iron castings are subject, namely sand-holes, is one which is almost invariably associated with that of scabbiness. If the sand which h[illegible] temperature, w[illegible]eroded by the entering current of iron does not rise [illegible] the thinner part, the reac[illegible]ce, the iron may partially solidify before it strikes a part of [illegible] of the thicker part, both piec[illegible]sult, it will rise till it imprisoned w[illegible] thinner part was much the cooler, will remain there, in that part, [illegible]ompression, while the thick part is in te[illegible]generally occur a little way [illegible]ll exist within the piece, which make it w[illegible]d and just ties which [illegible]rwise be in most cases. [illegible]e cavi-they form [illegible]es, however, we are enabled to utilize the shrinkage stren[illegible] of any [illegible]tage. For instance, when cast iron was the standard material ing, and [illegible] manufacture of ordnance, guns were cast with cores through Fro[illegible] water was circulated, so as to cool the surface of the bore cure [illegible] the outer parts solidified. When a gun is fired, it is known that same [illegible]ner layers of metal are stretched more than the outer ones. By use o[illegible]ng the inner layers of metal first, shrinkage strains are produced sand[illegible] the walls of the gun, causing the outer layers of metal to com-wh[illegible]ess the inner ones. The combined effect of the shrinkage stresses s[illegible]d the stresses produced by the explosion is to produce a uniform [illegible]tress throughout the walls of the guns, and so reduce the chance of rupture.

It is not often, however, that we are able to take advantage of shrinkage strains in this way. More often they are troublesome, caus-

iron on a core is equal to about three times the weight of the core, if it is solid, and very much more than that in case the core is hollow. Large cores are generally built-up about cast-iron skeletons known as core frames. These core frames are roughly of the same shape as the core, and serve to support it, and to bind it together. Were it not for these frames, heavy cores would fall to pieces by their own weight, and would be broken up in the process of casting, owing to the buoyant effect of the iron. A projecting piece of core having a volume of four cubic feet, for instance, will weigh approximately 500 pounds, and have a buoyant force of about 1,500 pounds thrusting it upward when the mold is poured. If the core frame is not amply strong and stiff, this force will bend the projection upward, or even break it off entirely. Hence the necessity of making large cored cavities of such form that the cores may be rigidly anchored and thoroughly secured. Nor is it sufficient that provision be made for securing the cores, but they must be of such shape, and so reinforced by the frames, that they will be stiff and strong, and not bend appreciably under the tremendous forces which will act on them when they are surrounded by the molten iron.

One of the most difficult things to cast properly is a long iron pipe having a small diameter and thin walls. If such a pipe be cast in the usual position, that is, lying horizontally, there will be an upward thrust along the whole length of the core, tending to bend it. On account of its slenderness, the central portions will be deflected upward, making the walls of the pipe thinner on one side, and thicker on the other. Often the deflection proves sufficient to thrust the core against the side of the mold, if it is long, or, in case the thickness of the wall is great in proportion [illegible] of the core, to break it off entirely. On this [illegible] of a casting which [illegible] ow columns of cast iron are often cast or [illegible]ined, the difficulty may be [illegible]ection of the core. The same principle [illegible] point a piece of iron, so that the pieces, by taking care to so design [illegible] at that point first, on account of the [illegible] have a vertical position wh[illegible] If, however, the heavy spot in the cast[illegible] a vertical position, [illegible] or if it is subject to heavy stress, this method of [illegible] to tendency to [illegible]nk-holes is to be avoided, since the chilling of the [illegible] may be com[illegible] so hard as to be impossible to cut with a tool, and at [illegible] the time creates stresses within the metal which weaken it. In su[illegible] case, shrink-holes are best prevented in the same manner as h[illegible] already been described for the prevention of sponginess, namely, th[illegible] use of a heavy riser, and the working of the iron with a rod when [illegible] is cooling.

The designer must therefore avoid heavy spots in castings, whenever possible, for the reason that they are likely to produce two serious faults, sponginess and shrink-holes. He must avoid them especially in those parts of castings which are to be machined or which are subject to heavy stresses. If they cannot be avoided entirely, in such a case, they should be so arranged that risers may be placed immediately over them, so that a rod may be inserted into the riser, and at the heart of the spot where the metal is thickest.

cooled very much, and probably the advancing face will be partially solidified. Consequently, when it meets a similar advancing face of metal, which has been similarly cooled, there is small likelihood of their uniting properly.

The remedy is obviously to so design the casting that the metal will not have to flow in thin streams for long distances. The arrangement of gates and risers is often of great importance in minimizing cold shuts, and if the casting is large, and at the same time has thin walls, the designer must see that the gates may be so arranged that the iron may quickly fill up the mold. While the arrangement of the gating generally depends on the molder's fancy, he may often be limited by the shape of the casting, and obliged to place the gate at some point where the iron, in flowing in, must spread itself into a thin sheet, or pass for a considerable distance through a narrow passage. Under such circumstances, a cold shut is hardly to be avoided.

Shrinkage Strains

The eighth and last fault is that of shrinkage strain. If we have two pieces of iron fastened end to end, as shown in Fig. 22, one piece being notably thinner than the other, the thinner piece will solidify first in the mold, and cool some hundreds of degrees below its freezing

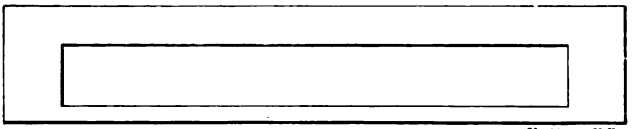

Fig. 22. Casting of such Shape as to be Subjected to Severe Internal Stresses

point, before the thicker part solidifies. As a result, the thicker part, when cooled to air temperature, will have, or rather tend to have, a less length than the thinner part, the reason being that at the instant of solidification of the thicker part, both pieces had the same length, although the thinner part was much the cooler. The thin part will then be in compression, while the thick part is in tension, and severe stresses will exist within the piece, which make it weaker than it would otherwise be in most cases.

Sometimes, however, we are enabled to utilize the shrinkage stresses to advantage. For instance, when cast iron was the standard material for the manufacture of ordnance, guns were cast with cores through which water was circulated, so as to cool the surface of the bore before the outer parts solidified. When a gun is fired, it is known that the inner layers of metal are stretched more than the outer ones. By cooling the inner layers of metal first, shrinkage strains are produced in the walls of the gun, causing the outer layers of metal to compress the inner ones. The combined effect of the shrinkage stresses and the stresses produced by the explosion is to produce a uniform stress throughout the walls of the guns, and so reduce the chance of rupture.

It is not often, however, that we are able to take advantage of shrinkage strains in this way. More often they are troublesome, caus-

ing work to warp in the process of machining, or causing mysterious cracks to develop without apparent cause. Since these strains are due to unequal rates of cooling in the different parts of the casting, the best way to eliminate them is to so arrange the thickness of the various parts, that the entire casting shall solidify at the same time. The second best way is to so arrange the parts of the casting that the unequal contraction shall not produce dangerous stresses at any point. In order that the entire casting shall cool at a uniform rate, it is necessary that all parts of it shall be of approximately uniform thickness, and that there shall be no sudden changes of section. In order that unequal contraction shall not produce dangerous stresses in the metal, it is necessary that there shall be no sharp corners, and that the various parts shall be free to expand when necessary. For instance, a wheel or pulley with a solid rim is likely to have severe stresses

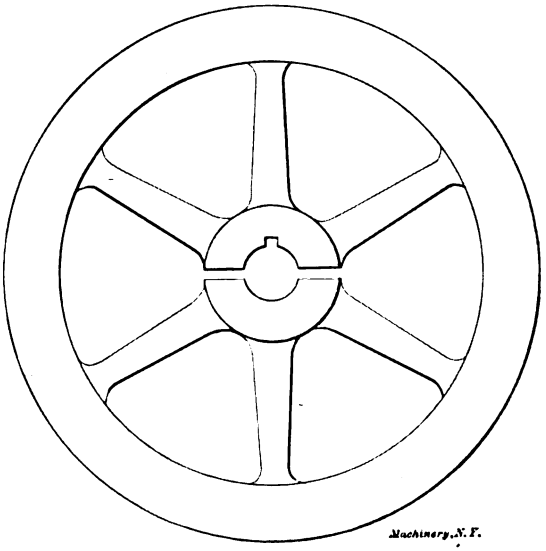

Fig. 23. Method of Obviating Shrinkage Strains in Large Wheels

set up within the arms by unequal cooling, but if the hub be divided as shown in Fig. 23, by means of a thin core, and then bolted subsequently, no shrinkage strains will occur, since the arms are free to expand or contract, independently of the rim.

Shrinkage strains often become so serious that it becomes necessary to make pieces in two or more parts, which it would be perfectly possible to make, at much less expense, in one piece. Large jacketed cylinders, for steam and gas engines, are good examples of this. When cast in one piece, the shrinkage stresses, together with the stresses set up by the varying temperatures incident to services, are often sufficient to crack them. Were the piece shown in Fig. 22 made in two parts, as shown in Fig. 24, there would be no shrinkage strains in either part, although the cost of machining the surfaces which are

fitted together, and of putting in the bolts, would not always warrant the construction.

Relative Economy of Simple and Complicated Castings

In conclusion, it may be well to state that most of the faults enumerated will be more likely to occur in a part of a complicated casting, than in a similar part of a simpler casting. For instance, the cylinder of a gas engine will be more likely to have some imperfection if it is cast integral with the frame, than if it is cast separately.

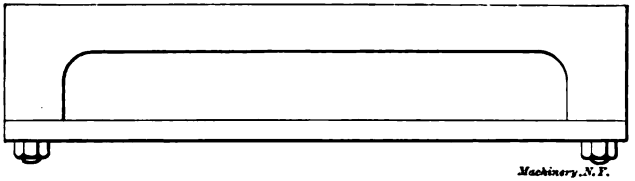

Fig. 24. Piece shown in Fig. 22, made in Two Parts

In the same way, the frame will be more likely to have an imperfection of some kind, than if it were cast separately. Assuming that ten per cent of the cylinders or frames would be lost if they were cast separately, it is more than likely that fifteen per cent of the castings, having cylinder and frame cast together, would be rejected for faults in the frame, and fifteen per cent of the remainder would be rejected for faults in the cylinder. In other words, twenty-eight per cent of these castings would be rejected, against ten per cent of the simpler forms. If more than eighteen per cent of the cost of the castings is saved in machining, or in other ways, by casting cylinder and frame together, it is well to do so, but if the saving is not more than sufficient to balance the loss, it is well to make several simple forms, instead of one complicated one.

CHAPTER VI

PROPORTIONS OF MACHINES BUILT IN A SERIES OF SIZES*

The problem of cost reduction forces itself, with increasing vividness upon the mind of every person who has to do with the manufacture of machinery. To the "small shop" people, and to those whose product is unsystematized and whose ideas of methods to pursue are, as yet, vague, this chapter may prove of some assistance.

There are three important means by which the shop product may be systematized: By the use of formulas; by the use of tables; and by the use of charts. As the two latter may be considered as the tabulated, or graphic results of the former, we will deal only with the formulas. In determining sizes, weights, and costs, these formulas are generally most efficient time-savers. For convenience, formulas in this chapter will be divided into two classes: The class used to produce the first of a type of machine we will call fundamental; and the class used to produce several sizes of this type of machine, empirical. Upon seeking fundamental formulas in text books and in mechanical engineers' pocket-books we are confronted by a diversity of opinions and tabulated results that are, at least to a novice, a bit confusing. These formulas, it is always to be remembered, have their application in the special case under consideration, and are to be used only as guide posts in our journey of design. It is evident to most designers that some kind of a tentative method must, sooner or later, be resorted to in the type design, for in nearly all machines the governing conditions soon become so numerous or indefinite as to render a subdivision of the problem a necessity. A certain amount of judgment is absolutely essential in the use of most fundamental formulas, and discrimination is always necessary.

Graphically, fundamental formulas can be represented by curves, and will be correct for all sizes under identical conditions, while empirical formulas rest on no such basis and hold true for but a certain series within certain limits. This constitutes the vital difference between fundamental and empirical formulas. A fundamental formula is one found through mathematical reasoning, while an empirical formula is made up by means of trial methods.

Suppose that we have built two or three sizes of a certain type of engine and that they are successful; we desire to put on the market an entire line. Our sizes of this type of engine will run from 10-inch cylinder diameter in the smallest to 30-inch cylinder diameter in the largest. We have built a 12-inch and a 24-inch engine and perhaps an 18-inch. These engines were, as was imperative, tentatively designed. In seeking the derivation of the empirical formula for the

* MACHINERY, November, 1902.

length of the cross-head shoe, we find that on our 12-inch engine we have given it an area of 55⅛ square inches, and on our 24 inch engine its area is 190⅛ square inches. In each case the length of the shoe was nearly twice its width, so we decide to make it so in our line of engines; solving for the width, we have in the 24-inch engine

$$2x^2 = 190.125; \quad x = \sqrt{95.0625} = 9.75.$$

making our shoe length for the 24-inch engine 19½ inches, and for the 12-inch engine 10½ inches.

To any scale in Fig. 25, perpendicular to the line *NL*, lay off these shoe lengths *PB* and *P'B'*—10½ inches, and 19½ inches, respectively—making the distance *BB'* equal to 12 inches, the difference between our sizes 12 inches and 24 inches. Through points *PP'* draw line *SA* intersecting *NL* at *A*. At *B''*—for our 18-inch size—erect a perpendicular *B''P''*. Draw *PF* intersecting *B''P''* at *F*. Using the notation given in the figure, we get the simple equations

$$e:y = c:d; \quad ed = cy; \quad e = \frac{c}{d}y;$$

$$x - c = e; \quad x - c = \frac{c}{d}y; \quad x = \frac{c}{d}y + c.$$

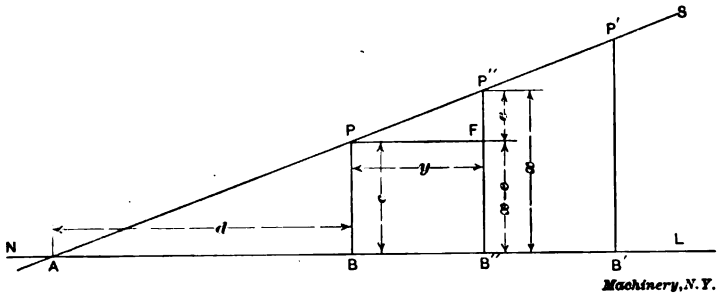

Fig. 25

In this last formula many will recognize an old acquaintance—the equation for a straight line. Let us now analyze this equation. From the figures it is seen that x = the desired dimension and that $\frac{c}{d}$ = the rate of increase in the slope of the line. If now we measure the distances and substitute their values for c and d we may determine the ratio $\frac{c}{d}$, which we will call f.

Then $f = \frac{c}{d} = \frac{10.5}{14} = \frac{3}{4}$, and

$x = fy + c$, or $x = \frac{3}{4}y + c$.

In interpreting our empirical formula $x = fy + c$, we have

y = a common unit to which all other sizes are to be referred,

x = desired dimension,

f = a factor of y,

c = a constant increment to be added in each case.

The unit of value y, as generally selected, is a bolt or cylinder diameter, or the capacity of the machine. Obviously, in our line of engines, we select the cylinder diameter D as our value of y, and our unit formula then becomes $\frac{3}{4}D + c$. The value of c is now determined by direct substitution in the following manner: x being the shoe length, we substitute for it 19½ inches (its length on the 24-inch cross-head); then

$$\frac{3}{4} \times 24 + c = 19\frac{1}{2};\ c = 19\frac{1}{2} - 18 = 1\frac{1}{2}.$$

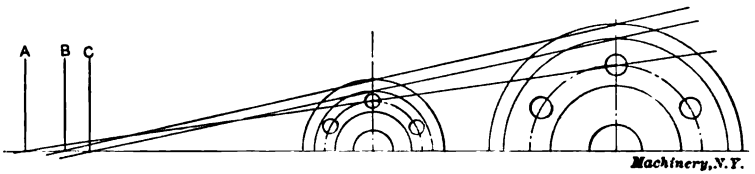

Fig. 26

Note, that while we have assigned to y and c other values, we have not altered the relations; our formula for this particular cross-head dimension now becomes $\frac{3}{4}D + 1\frac{1}{2}$ inches.

For convenience in charting these sizes, some point is determined upon as a pole about which these lines (represented by our formulas) are drawn as vectors, the ordinate length for a particular size giving the desired dimension. If now in the determination of other formulas it be found, as is likely to be the case, that these lines do not all pass

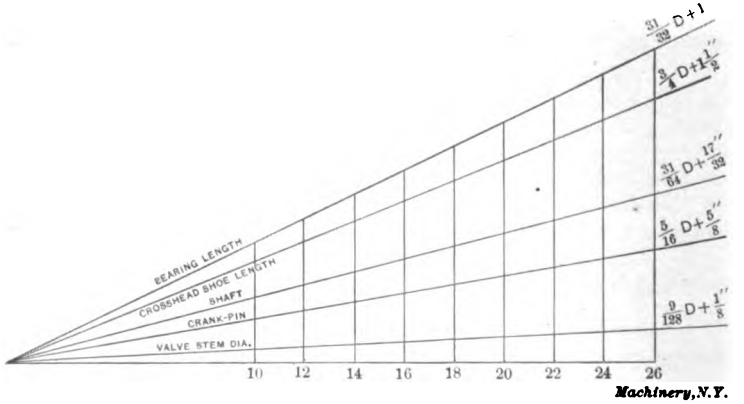

Fig. 27

through a common point, it becomes necessary to select one. In well-designed machines the intersection of these lines with the base line will come close together, and an average of these intersections is selected as a pole. Figs. 26 and 27 will serve to illustrate the purport of this paragraph.

Experienced designers are well aware that the final test of any dimension in a design is that of satisfying all fundamental calculable

conditions; nevertheless, the instances where our empirical formulas prove incorrect are very few indeed. With the design for our line of engines thus systematized, let us consider what are to be the advantages that will naturally result from it. In the first place, the weights of any particular parts, or details of any size in our line of engines may be determined prior to its design or manufacture. In the determination of weights, cubic contents, and similar processes, the use of "differences" as applied to higher mathematics, will not only prove an efficient time-saver, but relieve much of the drudgery attendant upon such operations.

A brief explanation of the use of "differences" is as follows: When we have a series of numbers connected by a regular, though not obvious law, the nature of that law may be discovered by forming a new series of differences between each two terms of the original series, and then

TABLE SHOWING PRINCIPLE OF THE METHOD OF DIFFERENCES

Arithmetic Solution.					Algebraic Solution.			
Col. 4.	Col. 3.	Col. 2.	Col. 1.	Term	Col. 5. Original Ser.	Col. 6. 1st Ser. Differences.	Col. 7. 2d Ser. Dif.	Col. 8. 3rd Dif.
		5	7	1	W			
	3					y	x	c
1		8	12	2	$W+y$	$y+x$		
	4						$x+c$	c
1		12	20	3	$W+2y+x$	$y+2x+c$		
	5						$x+2c$	c
1		17	32	4	$W+3y+3x+c$	$y+3x+3c$		
	6						$x+3c$	c
1		23	49	5	$W+4y+6x+4c$	$y+4x+6c$		
	7						$x+4c$	c
1		30	72	6	$W+5y+10x+10c$	$y+5x+10c$		
	8						$x+5c$	c
1		38	102	7	$W+6y+15x+20c$	$y+6x+15c$		
	9						$x+6c$	c
1		47	140	8	$W+7y+21x+35c$	$y+7x+21c$		
	10						$x+7c$	c
		57	187	9	$W+8y+28x+56c$	$y+8x+28c$		
	11							
		68	244	10	$W+9y+36x+84c$			
			312					

treating the new series (which we may call the series of first differences) in the same way, until we reach a series of differences, the law of which is obvious. In the table above will be found both the arithmetic and algebraic solutions of problems by "differences."

In column 1 of the table is given a series of numbers, which we suspect follows some definite, though not obvious law; and which we desire to discover. We here take the differences between each two terms in column 1 and put them down in column 2. Having proceeded with the two orders of differences, the law becomes apparent early in the process of determining the values in column 3. Referring again to the table, it is evident that the next term of column 3 must be 11, which gives 68 (57 + 11) as the next term of column 2 (the series of first differences) and 312 (244 + 68) for the original series. Note that this series can thus be obtained indefinitely, and that ultimately,

in any regular series, some one series of differences will become a constant. It is on the principle of differences that calculating machines are constructed to compute logarithmic tables, etc.

In the algebraic solution of such problems as involve the determination of weights and volumes, it will be necessary to calculate these weights or volumes for the 1st, 2d, 3d, and 4th terms of our given series. By substiting in the formulas in column 5 the numerical value of W, which is the first term in our given series, we may equate these expressions and our calculated values for the 2d, 3d, and 4th terms, and determine, by simple algebraic processes, the values of c, x, y, and ultimately, those values which we are requiring in the original series, column 5.

The computations concerning the cost of materials logically follow the determination of volumes and weights and are made with comparative ease. However, our next problem concerning the determination of the cost of labor is a more difficult one to solve. Formulas should express this cost in so many cents per pound of product, including all shop charges, and be established partially by experience and partially by methods suggested in this chapter.

In many instances it will be found both desirable and convenient to have this cost formula embody the unit dimension. When this is the case, the formula is, as are most cost formulas, established by the tentative methods to which we have just alluded. As the methods employed in the deduction of these formulas render them purely empirical, one or another form of expression may have to be adopted. However, formulas of this class usually assume the form of, or at least may be solved into, the familiar type form

$$ax^2 - bx + c,$$

where a and b are factors of the unit dimension, and c is a constant.

For the purposes of illustration we will assume that the formula for the cost of labor which we have established is

$$\frac{3}{2}D^2 - 15D + 314.$$

In this form the formula gives the total cost of labor in dollars for the size desired. The cost of labor C for our 18-inch engine would then be

$$C = \frac{3}{2}(18)^2 - 15 \times 18 + 314 = 530.$$

The computation of a final cost formula, embodying the unit dimension, is the last process in our development of shop formulas; this formula is derived directly from those relative to the costs of material and labor.

No. 21. Measuring Tools.—History and Development of Standard Measurements; Special Calipers; Compasses; Micrometer Tools; Protractors, etc.

No. 22. Calculation of Elements of Machine Design.—Factor of Safety; Strength of Bolts; Riveted Joints; Keys and Keyways; Toggle-joints.

No. 23. Theory of Crane Design.—Jib Cranes; Calculation of Shaft, Gears, and Bearings; Force Required to Move Crane Trolleys, etc.

No. 24. Examples of Calculating Designs.—Charts in Designing; Punch and Riveter Frames; Shear Frames; Billet and Bar Passes; etc.

No. 25. Deep Hole Drilling.—Methods of Drilling; Construction of Drills.

No. 26. Modern Punch and Die Construction.—Construction and Use of Sub-press Dies; Modern Blanking Die Construction; Drawing and Forming Dies.

No. 27. Locomotive Design, Part I.—Boilers, Cylinders, Pipes and Pistons

No. 28. Locomotive Design, Part II.—Stephenson Valve Motion; Theory, Calculation and Design of Valve Motion; The Walschaerts Valve Motion.

No. 29. Locomotive Design, Part III.—Smokebox; Exhaust Pipe; Frames; Cross-heads; Guide Bars; Connecting-rods; Crank-pins; Axles; Driving-wheels.

No. 30. Locomotive Design, Part IV.—Springs, Trucks, Cab and Tender.

No. 31. Screw Thread Tools and Gages.

No. 32. Screw Thread Cutting.—Change Gears; Thread Tools; Kinks.

No. 33. Systems and Practice of the Drafting-Room.

No. 34. Care and Repair of Dynamos and Motors.

No. 35. Tables and Formulas for Shop and Drafting-Room.—The Use of Formulas; Solution of Triangles; Strength of Materials; Gearing; Screw Threads; Tap Drills; Drill Sizes; Tapers; Keys; Jig Bushings, etc.

No. 36. Iron and Steel.—Principles of Manufacture and Treatment.

No. 37. Bevel Gearing.—Rules and Formulas; Examples of Calculation; Tooth Outlines; Strength and Durability; Design; Methods of Cutting Teeth.

No. 38. Grinding and Lapping.—Grinding and Grinding Machines; Disk Grinders; Bursting of Emery Wheels; Kinks; Lapping Flat Work and Gages.

No. 39. Fans, Ventilation and Heating.—Fans; Heaters; Shop Heating.

No. 40. Fly-Wheels.—Their Purpose, Calculation and Design.

No. 41. Jigs and Fixtures, Part I.—Principles of Jig and Fixture Design; Drill and Boring Jig Bushings; Locating Points; Clamping Devices.

No. 42. Jigs and Fixtures, Part II.—Open and Closed Drill Jigs.

No. 43. Jigs and Fixtures, Part III.—Principles of Boring Jig Design; Boring, Reaming and Facing Tools; Milling and Planing Fixtures.

No. 44. Machine Blacksmithing.—Systems, Tools and Machines used.

No. 45. Drop Forging.—Lay-out of Plant; Methods of Drop Forging; Dies.

No. 46. Hardening and Tempering.—Hardening Plants; Treating High-Speed Steel; Hardening Gages; Case-hardening; Hardening Kinks.

No. 47. Electric Over-Head Cranes.—Design and Calculation.

No. 48. Files and Filing.—Types of Files; Using and Making Files.

No. 49. Girders for Electric Overhead Cranes.

No. 50. Principles and Practice of Assembling Machine Tools, Part I.

No. 51. Principles and Practice of Assembling Machine Tools, Part II.

No. 52. Advanced Shop Arithmetic for the Machinist.

No. 53. Use of Logarithms, and Logarithmic Tables.

No. 54. Solution of Triangles, Part I.—Methods, Rules and Examples for Practice.

No. 55. Solution of Triangles, Part II.—Tables of Trigonometric Functions.

The Industrial Press, Publishers of Machinery

49-55 Lafayette Street Subway Station, Worth Street **New York City, U.S.A.**

PRICE 25 CENTS

SPUR GEARING

RULES AND FORMULAS—INTERNAL SPUR GEARS—DESIGN OF SPUR GEARS

THIRD REVISED EDITION

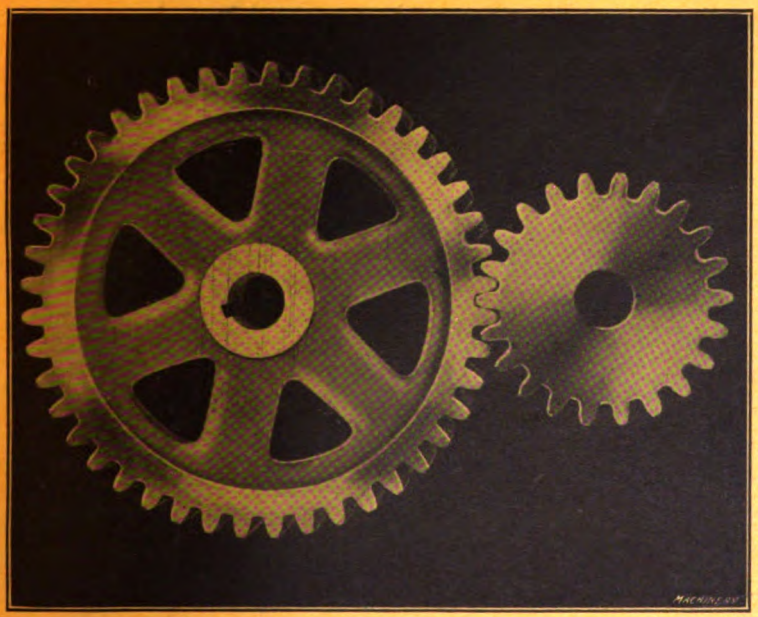

MACHINERY'S REFERENCE SERIES—NO. 15
PUBLISHED BY MACHINERY, NEW YORK

MACHINERY'S REFERENCE BOOKS

This treatise is one unit in a comprehensive Series of Reference books originated by MACHINERY, and including an indefinite number of compact units, each covering one subject thoroughly. The whole series comprises a complete working library of mechanical literature in which the Mechanical Engineer, the Master Mechanic, the Designer, the Machinist and Tool-maker will find the special information he wishes to secure, selected, carefully revised and condensed for him. The books are sold singly or in complete sets, as may be desired. The price of each book is 25 cents (one shilling) delivered anywhere in the world.

LIST OF REFERENCE BOOKS

No. 1. Worm Gearing.—Calculating Dimensions for Worm Gearing; Hobs for Worm Gears; Location of Pitch Circle; Self-Locking Worm Gearing, etc.

No. 2. Drafting-Room Practice.—Drafting-Room System; Tracing, Lettering and Mounting; Card Index Systems.

No. 3. Drill Jigs.—Elementary Principles of Drill Jigs; Drilling Jig Plates; Examples of Drill Jigs; Jig Bushings; Using Jigs to Best Advantage.

No. 4. Milling Fixtures.—Elementary Principles of Milling Fixtures; Collection of Examples of Milling Fixture Design, from practice.

No. 5. First Principles of Theoretical Mechanics.

No. 6. Punch and Die Work.—Principles of Punch and Die Work; Suggestions for the Making and Use of Dies; Examples of Die and Punch Design.

No. 7. Lathe and Planer Tools.—Cutting Tools for Planer and Lathe; Boring Tools; Shape of Standard Shop Tools; Forming Tools.

No. 8. Working Drawings and Drafting-Room Kinks.

No. 9. Designing and Cutting Cams.—Drafting of Cams; Cam Curves; Cam Design and Cam Cutting; Suggestions in Cam Making.

No. 10. Examples of Machine Shop Practice.—Cutting Bevel Gears with Rotary Cutters; Making a Worm-Gear; Spindle Construction.

No. 11. Bearings.—Design of Bearings; Causes of Hot Bearings; Alloys for Bearings; Friction and Lubrication; Friction of Roller Bearings.

No. 12. Mathematics of Machine Design.—Compiled with special reference to shafting and efficiency of hoisting machinery.

No. 13. Blanking Dies.—Making Blanking Dies; Blanking and Piercing Dies; Construction of Split Dies; Novel Ideas in Die Making.

No. 14. Details of Machine Tool Design.—Cone Pulleys and Belts; Strength of Countershafts; Tumbler Gear Design; Faults of Iron Castings.

No. 15. Spur Gearing.—Dimensions; Design; Strength; Durability.

No. 16. Machine Tool Drives.—Speeds and Feeds of Machine Tools; Geared or Single Pulley Drives; Drives for High Speed Cutting Tools.

No. 17. Strength of Cylinders—Formulas, Charts, and Diagrams.

No. 18. Shop Arithmetic for the Machinist.—Tapers; Change Gears; Cutting Speeds; Feeds; Indexing; Gearing for Cutting Spirals; Angles.

No. 19. Use of Formulas in Mechanics.—With numerous applications.

No. 20. Spiral Gearing.—Rules, Formulas, and Diagrams, etc.

No. 21. Measuring Tools.—History and Development of Standard Measurements; Special Calipers; Compasses; Micrometer Tools; Protractors, etc.

No. 22. Calculation of Elements of Machine Design.—Factor of Safety; Strength of Bolts; Riveted Joints; Keys and Keyways; Toggle-joints.

No. 23. Theory of Crane Design.—Jib Cranes; Calculation of Shaft, Gears, and Bearings; Force Required to Move Crane Trolleys; Pillar Cranes.

No. 24. Examples of Calculating Designs.—Charts in Designing; Punch and Riveter Frames; Shear Frames; Billet and Bar Passes; etc.

No. 25. Deep Hole Drilling.—Methods of Drilling; Construction of Drills.

No. 26. Modern Punch and Die Construction.—Construction and Use of Subpress Dies; Modern Blanking Die Construction; Drawing and Forming Dies.

No. 27. Locomotive Design, Part I.—Boilers, Cylinders, Pipes and Pistons.

No. 28. Locomotive Design, Part II.—Stephenson Valve Motion; Theory, Calculation and Design of Valve Motion; The Walschaerts Valve Motion.

No. 29. Locomotive Design, Part III.—Smokebox; Exhaust Pipe; Frames; Cross-heads; Guide Bars; Connecting-rods; Crank-pins; Axles; Driving-wheels.

No. 30. Locomotive Design, Part IV.—Springs, Trucks, Cab and Tender.

No. 31. Screw Thread Tools and Gages.

No. 32. Screw Thread Cutting.—Lathe Change Gears; Thread Tools; Kinks.

No. 33. Systems and Practice of the Drafting-Room.

No. 34. Care and Repair of Dynamos and Motors.

No. 35. Tables and Formulas for Shop and Drafting-Room.—The Use of Formulas; Solution of Triangles; Strength of Materials; Gearing; Screw Threads; Tap Drills; Drill Sizes; Tapers; Keys; Jig Bushings, etc.

No. 36. Iron and Steel.—Principles of Manufacture and Treatment.

No. 37. Bevel Gearing.—Rules and Formulas; Examples of Calculation; Tooth Outlines; Strength and Durability; Design; Methods of Cutting Teeth.

No. 38. Grinding and Grinding Machines.

(See inside back cover for additional titles)

MACHINERY'S REFERENCE SERIES

EACH NUMBER IS ONE UNIT IN A COMPLETE LIBRARY OF MACHINE DESIGN AND SHOP PRACTICE REVISED AND REPUBLISHED FROM MACHINERY

NUMBER 15

SPUR GEARING

THIRD REVISED EDITION

CONTENTS

First Principles of Gearing - - - - - - - - 3

Formulas for Dimensions of Spur Gears, by ARTHUR B. BABBITT - - - - - - - - - - - - 9

Internal Spur Gears, by RALPH E. FLANDERS - - - 22

Strength and Durability of Spur Gears, by RALPH E. FLANDERS - - - - - - - - - - - 24

Design of Spur Gearing, by RALPH E. FLANDERS - - 33

Variation of the Strength of Gear Teeth with the Velocity, by RALPH E. FLANDERS - - - - - - - 39

Simplified Formulas for the Strength of Gears, by C. R. WHITTIER - - - - - - - - - - - 42

Copyright, 1912, The Industrial Press, Publishers of MACHINERY
49-55 Lafayette Street, New York City

CHAPTER I

FIRST PRINCIPLES OF GEARING*

Gear wheels are such common objects about the machine shop, and are manufactured with such rapidity and ease by the aid of the modern automatic gear cutter, that many seldom stop to think what they really are, why the teeth must be constructed with certain curves, and what it is desired that they shall accomplish. In following chapters we shall take up some of the practical questions, touching upon the calculations that come up in the design, but will here deal chiefly with a few of the theoretical points of the subject that are seldom explained in a simple manner for the benefit of those who have had neither the time nor the opportunity to look into matters of this kind.

Suppose there are two wheels arranged as in Fig. 1 with their faces in close, frictional contact, and that both are exactly the same size, so

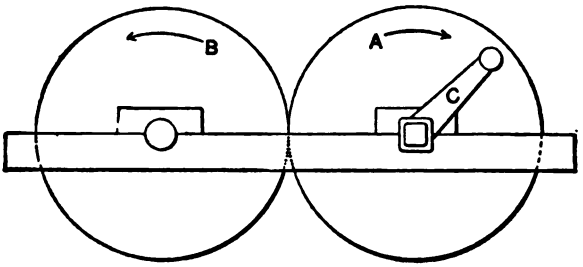

Fig. 1

that when the crank is turned around once, wheel *B* will turn exactly once also, provided, of course, there is no slipping between the two wheels. It must be noticed, moreover, that if the crank be turned uniformly, wheel *B* will not only make the correct number of revolutions relative to *A*, but it will revolve uniformly, as well; that is, both its total motion and the motion from point to point will be correct.

Now there are many places in machine construction where the slipping inseparable from friction wheels cannot be tolerated, and this difficulty might be overcome by fastening small projections to one of the wheels, as on *A* in Fig. 2, and cutting grooves in the other wheel, *B*. Then, if the crank were turned, wheel *B* would always make just the right number of turns, even if considerable power were transmitted. It is probable, however, that these projections and grooves would not fulfill the purpose of gear teeth. What is wanted of gear teeth is that they shall give exactly the same kind of motion as corresponding friction wheels, running without slipping. They must not only keep

* MACHINERY, June, 1898.

the number of revolutions right, but they must give a perfectly even and smooth motion from point to point or from tooth to tooth.

Fig. 3 will show clearly how such a result is obtained. It represents the friction wheels with teeth fastened to them, the teeth, of course, extending all the way around instead of part way as shown. These teeth are set so as to be partly without and partly within the edges of the two wheels, as obviously they will give better results thus arranged than with all the projections on one wheel and all the grooves or depressions on the other, as in Fig. 2.

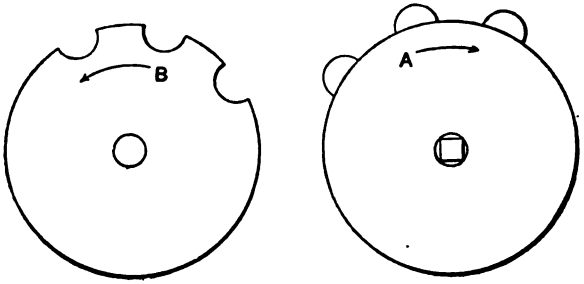

Fig. 2

With the wheels fitted in this way it can be proved that the only conditions which must be fulfilled in order that the teeth shall give wheel *B* the same motion that it would have if it were driven by frictional contact with wheel *A* is that a line drawn from the point *O*, where the two wheels meet, to the point where the tooth curves touch, shall be at right angles to both tooth curves at this point, whatever the

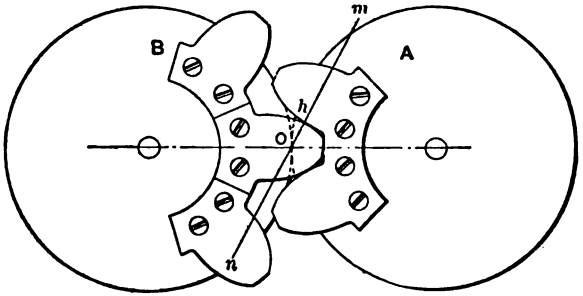

Fig. 3

position of the gears. For example, in Fig. 3, two of the teeth touch at *h*. If the curves are of the right shape, a line *m n*, drawn through *h* and *O*, will be at right angles to both curves at point *h*. This is the law of tooth curves, and it makes no difference what the shape of the teeth is, so far as their correct action is concerned, if this law holds true for every successive point where the teeth come in contact.

In technical language the "friction wheels" mentioned are known as "pitch cylinders," and they are always represented on a gear drawing by a line—usually a dash and dot line—called the "pitch line." As

teeth are generally proportioned, this line falls nearly, but not quite, midway between the tops and bottoms of the teeth, the inequality being due to the space left at the bottom of the teeth for clearance. The diameter of the pitch cylinder is called the "pitch diameter."

Involute System

We are now ready to consider the particular forms of teeth most often used. The one that is at present most in favor is the involute tooth, the term "involute" being the name of a curve described by the

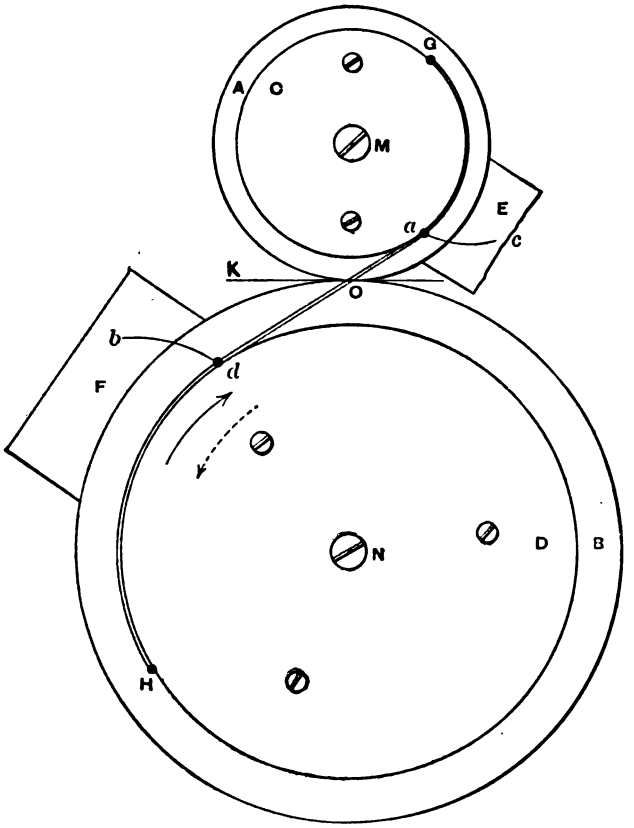

Fig. 4

end of a cord as it is unwound from another curve. For example, to draw an involute, wind a cord around a circular disk of any convenient material, and make a loop in the outer end of the cord. Lay the disk flat on a piece of paper, and with a pencil in the loop, unwind the string, keeping it drawn tight, and let the point of the pencil trace a curve, which will then be an involute.

In Fig. 4 is shown how the same principle is applied to forming tooth curves. *A* and *B*, with centers at *M* and *N*, are two disks which

serve the purpose of pitch cylinders. *C* and *D* are two smaller disks fastened to the larger ones and around which a cord is stretched and fastened at points *G* and *H*. When either disk is turned, the cord is supposed to pull the other one around at the same speed that it would go if moved solely by frictional contact between disks *A* and *B*. To do this, it is simply necessary to have the disks *C* and *D* in the same ratio as *A* and *B*. If *A*, for example, is half as large as *B*, then *C* must be half as large as *D*.

To make room for drawing the curves, let pieces *F* and *E* be fastened to the large and small wheels, respectively. With a pencil fixed at point *d* on the cord, turn the wheels in the direction of the solid

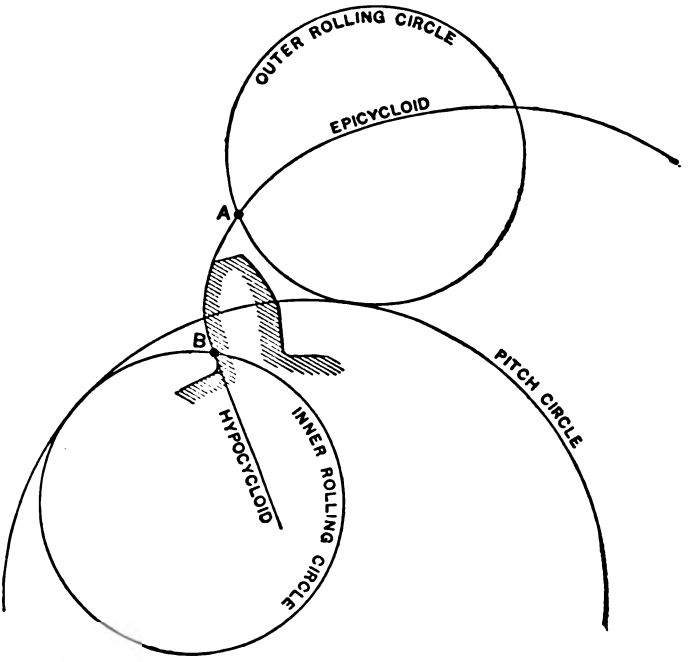

Fig. 5

arrow, meanwhile moving the pencil outward, and the curve *db* will be described, which will be a suitable tooth curve for the larger wheel, and which it can be proved will answer the requirements of the general law. Starting again with the pencil at *a*, and turning the wheels in the direction of the dotted arrow, and moving the pencil outward, a similar curve, *ac*, for the smaller wheel will be traced.

The circles representing the disks *C* and *D* are called "base circles," and in practice are drawn at a distance from the pitch circle of about one-sixtieth of the pitch diameter. This brings the angle, *KOd*, called the angle of obliquity, in Fig. 4, about 14½ degrees; and although it is not by any means certain that this is the best angle, it is the one commonly used.

Cycloidal System

Take a silver dollar and roll it along the edge of a ruler, holding the point of a pencil at the rim of the dollar, so that as the latter rolls, the pencil will trace a curve. This curve is a cycloid. Should the dollar be rolled on the edge of a circular disk, however, the curve traced would be an epi-cycloid, and should it be rolled on the inside of a hoop, it would be called a hypo-cycloid. These curves are employed for the teeth of the cycloidal system of gears.

In Fig. 5 it is shown how the face or the outer portion of the tooth is rolled up by the point *A* on the outer rolling circle, and how the flank or inner portion is generated by point *B* on the inner rolling circle. In this case the hypo-cycloid and flank are straight lines, the reason for this being that, as drawn, the diameter of the rolling circle

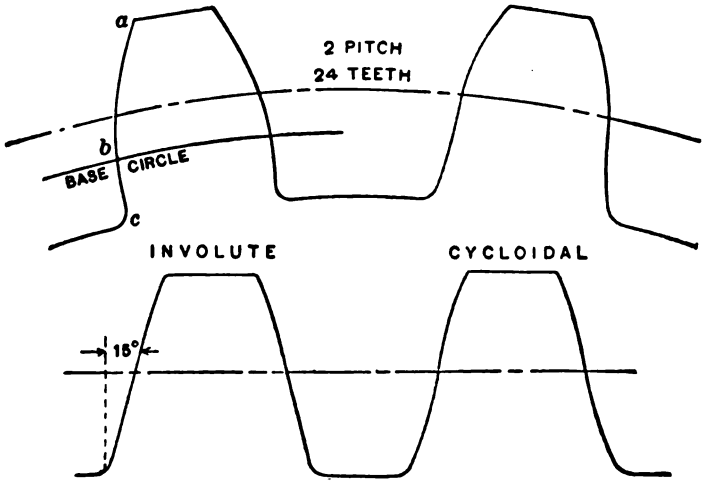

Fig. 6

is one-half the diameter of the pitch circle of the gear, and the hypo-cycloid generated under these conditions becomes a straight line.

Comparison of the Involute and Cycloidal Systems

The involute and cycloidal systems are the only two that are used to any extent, and in Fig. 6 a gear tooth and rack tooth of both are shown for comparison. The involute gear tooth has the involute curve from point *a* to point *b* on the base circle, and from *b* to *c* at the bottom of the tooth the flank is a straight, radial line. One difficulty with the involute system is that with the standard length of tooth the point *a* will interfere when running with gears or pinions having a small number of teeth. To avoid this, the point is rounded off a little below the involute curve. In general appearance the tooth seems to have a broad, strong base, and a continuous curve from *a* to *c*. A strong feature of the involute gearing is that it will run correctly even if the distance between the centers of the wheels is not exactly right. This

will be evident by referring to Fig. 4, where it will appear that the relative velocities of the two wheels will be the same however far apart they may be, and if involute teeth are used in place of the string connection there shown, the action will be just the same. The involute rack tooth has straight sides at an angle of 14½ degrees, with the points rounded off.

Of the cycloidal teeth but little need be said except that they have two distinct curves above and below the pitch line, as previously explained, and that in the rack tooth the two curves are just alike, but reversed.

TABLE I. CUTTERS FOR INVOLUTE GEAR TEETH

No.	1	will	cut	wheels	from	135	teeth	to	a rack.	
"	2	"	"	"	"	55	"	"	134	teeth.
"	3	"	"	"	"	35	"	"	54	"
"	4	"	"	"	"	26	"	"	34	"
"	5	"	"	"	"	21	"	"	25	"
"	6	"	"	"	"	17	"	"	20	"
"	7	"	"	"	"	14	"	"	16	"
"	8	"	"	"	"	12	"	"	13	"

Whatever system is used, it is essential that all the wheels of a given pitch should be capable of running together. To make this possible with the involute, all the wheels must have the same angle of obliquity; and with the cycloidal system the same size rolling or describing circle must be employed for all sizes. The circle generally chosen is one having half the diameter of a 12-tooth pinion, which makes the flanks of this pinion radial. In Fig. 5, if the diameter of the rolling circle had been either greater or less than half the diameter

TABLE II. CUTTERS FOR CYCLOIDAL GEAR TEETH

Letter of Cutter	No. of Teeth	Letter of Cutter	No. of Teeth
A	12	M	27 to 29
B	13	N	30 to 33
C	14	O	34 to 37
D	15	P	38 to 42
E	16	Q	43 to 49
F	17	R	50 to 59
G	18	S	60 to 74
H	19	T	75 to 99
I	20	U	100 to 149
J	21 to 22	V	150 to 249
K	23 to 24	W	250 or more
L	25 to 26	X	Rack

of the pitch circle, the flank of the tooth would have been curved, and in the case of the greater circle, the curve would have fallen inside of the radial flank drawn in the figure, causing a weak, under-cut tooth. With the smaller circle, the curve would fall outside, making a strong tooth.

Cutters for Involute and Cycloidal Teeth

According to the system for cutting gear teeth adopted by the Brown & Sharpe Mfg. Co., Providence, R. I., any gear of one pitch will mesh with any other gear or with a rack of the same pitch. Eight cutters are required for each pitch. These eight cutters are adapted to cut from a pinion of twelve teeth to a rack, and are numbered, respectively, 1, 2, 3, etc. The number of teeth and the pitch for which a cutter is adapted is always marked on each. A list of these cutters is given in Table I.

Cutters for the cycloidal form of teeth are also made so that any gear of one pitch will mesh into any other gear or into a rack of the same pitch, but twenty-four cutters are required for each pitch. In order that gears with this form of teeth shall run well together, they must be cut accurately to the required depth; otherwise the pitch circles will not be tangent to each other. To secure a proper depth of tooth, the cutters are made with a shoulder which determines the exact depth that the tooth should be cut. Thus, if care is taken when turning the blanks, to obtain the correct outside diameter of the gear, no measurements need be taken when cutting the teeth. The twenty-four cutters are adapted to cut from a pinion of twelve teeth to a rack, and are designated by letters *A*, *B*, *C*, etc. The number of teeth and the pitch for which the cutter is adapted is always marked on each, the same as in the case of cutters for involute teeth. A list of these cutters is given in Table II.

CHAPTER II

FORMULAS FOR DIMENSIONS OF SPUR GEARS*

When we consider the number of gears used in machinery, and the number of men employed in the manufacture of machines using gears, it is rather surprising to find men who are unable to find the outside diameter, having given the pitch diameter and pitch, or to find the distance between centers of two gears, having given the number of teeth and pitch, and similar problems. The object of this chapter is to explain in as clear and practical a manner as possible the underlying principles of gearing, and to give concise rules or formulas for the solution of problems which arise in our everyday work upon gears.

Pitch Diameters

Two shafts *A* and *A'* (Fig. 7) carry rollers *B* and *B'*. By having pressure on the shafts as indicated by the arrows, and revolving *A*, the friction of the rollers at the point of contact, *X*, will cause *A'* to revolve, but we can readily see that if any great amount of power is to be

* MACHINERY, July, August, October and November, 1897.

transmitted, the rollers are liable to slip at the point of contact *X*, which will not give a positive motion; that is, it will require more than one revolution of the shaft *A* to produce one revolution of the shaft *A'*.

Suppose, as shown in Fig. 8, that we put projections on the surface of the roller *B* and cut recesses in the roller *B'*, making them of such shape that the sides of the projections on roller *B* will slide with as little friction as possible upon the sides of the projections caused by cutting the recesses in roller *B'*. Then, when shaft *A* is revolved, shaft

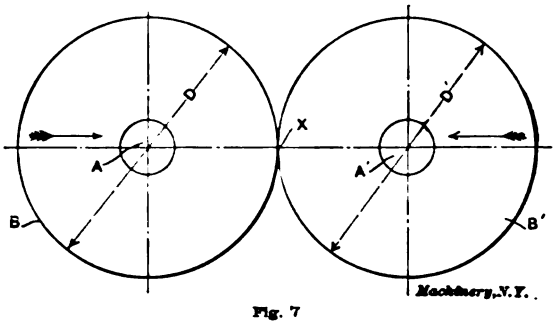

Fig. 7

A' must also revolve. The identity of the rollers *B* and *B'* is not lost, for we have simply added a number of projections to one, and cut the same number of recesses in the other, and the point of contact of the two rollers is still at *X*, but in this case there is no special pressure required to keep the rollers together as in the preceding case, nor is

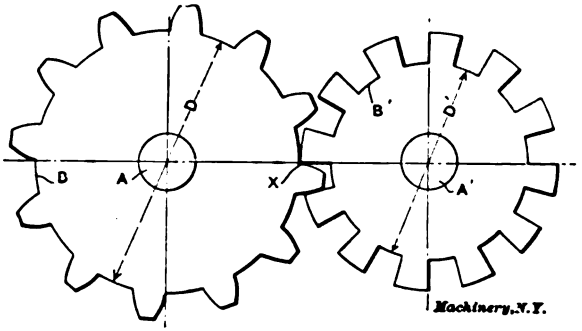

Fig. 8

there any slip, and consequently shaft *A'* will make one revolution in the same time that shaft *A* does.

In Fig. 9 we have changed Fig. 8 by adding projections between recesses in roller *B'*, and by cutting recesses on roller *B* between projections, and we have the regular gear tooth. We have now no visible part of the original rollers *B* and *B'* left, but we have in their places imaginary rollers, the diameters of which are the pitch diameters of the gears. Thus we might have called our original rollers pitch rollers, and then proceeded to put on our projections and cut our recesses,

which would have given us the gear wheel. This has already been explained in a general way in Chapter I.

Of course, in practice gears are never made in this way; the gear blank is first turned up to the correct diameter, and then the space between the teeth is cut. The method of finding the outside diameter will be given later, this illustration being used simply to show the evolution of the gear wheel from the friction disks or pitch rollers.

Pitch

When we speak of the pitch of a gear, the diametral pitch is generally referred to. The gear really has two pitches, diametral and circular. The *diametral pitch* of a gear is the number of teeth for each inch of pitch diameter. If a gear has 20 teeth and the pitch diameter is 2 inches, the diametral pitch would equal $20 \div 2$, or 10; or there are 10 teeth in the gear for each inch of pitch diameter which it contains, and we would call it a 10-pitch gear. The *circular pitch*

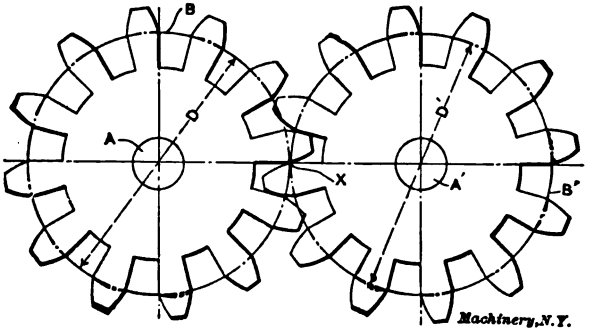

Fig. 9

of a gear is the distance from the center of one tooth to the center of the next adjacent tooth, measured on the pitch lines. It is very seldom that circular pitch is used in describing cut gears.

It can readily be seen that the circular pitch being equal to the distance from the center of one tooth to the center of the next, must be the result of dividing the circumference of the pitch circle by the number of teeth in the gear. Should an occasion arise where it would be necessary to obtain the circular pitch, having the diametral pitch given, divide 3.1416 by the diametral pitch, and the quotient will be the circular pitch, or, expressed in its simplest form,

$$\frac{3.1416}{P} = P' \qquad (1)$$

in which P = diametral pitch; P' = circular pitch.

Example.—If the diametral pitch of a gear is 4, and it is required to find the circular pitch, divide 3.1416 by 4, and the quotient, 0.7854, is the circular pitch of the gear.

If the circular pitch be given, to find the diametral pitch, we can readily see that formula (1) would have to be transposed and would read thus:

and divide by the pitch. This, expressed as a formula, is:

$$\frac{N+2}{P}=O \qquad (5)$$

in which N = number of teeth; P = diametral pitch; O = outside diameter.

Example.—Given a gear of 20 teeth and 4 pitch, to find the outside diameter. The number of teeth, 20, plus 2 equals 22, and 22 divided by 4 (the pitch of the gear) equals 5½, the outside diameter of the gear.

This formula is simply a combination of formulas (3) and (4), for we first find the pitch diameter, and then add the addendum twice, for it must be added on each side of the pitch diameter. The mathematical solution is as follows:

$$\frac{N}{P}=D;\ D+\frac{1}{P}+\frac{1}{P}=O$$

$$O=D+\frac{2}{P};\ O=\frac{N+2}{P} \qquad (5)$$

Dedendum and Clearance

The dedendum is the working depth of the tooth below the pitch line, and must be equal to the addendum or $\frac{1}{P}$, for the pitch circles of two gears are tangent (touching), so the addendum of one will give the working depth of the other below the pitch line. The clearance is the distance from the end of the dedendum to the bottom of the space between the teeth. There is no common standard for this distance, different gear makers using different distances, yet the difference between them is very slight.

The Brown & Sharpe formula for this distance is:

$$F=\frac{0.157}{P} \qquad (6)$$

in which F = clearance; P = diametral pitch.

The Geo. B. Grant formula is:

$$F=\frac{S}{8} \qquad (7)$$

in which F = clearance; S = addendum.

Thickness of Tooth

The thickness of tooth and width of the space of a gear are always equal at the pitch line, and if the circular pitch is the distance from the center of one tooth to the center of the next tooth measured on the pitch line, tooth and space being equal, then the thickness of tooth must be equal to one-half the circular pitch. or

$$T=\frac{P'}{2} \qquad (8)$$

in which T = thickness of tooth at pitch line; P' = circular pitch.

We know by formula (1) that

$$P' = \frac{3.1416}{P} \qquad (1)$$

and substituting this value for P' in formula (8) we have:

$$T = \frac{\frac{3.1416}{P}}{2}$$

and this formula resolved to its simplest form is:

$$T = \frac{1.5708}{P} \qquad (9)$$

in which T = thickness of tooth at pitch line; P = diametral pitch.

Example.—Given a gear 1 3/16 circular pitch, what is the thickness of tooth at the pitch line? 1 3/16 (the circular pitch) divided by 2 gives 19/32, the thickness of tooth at the pitch line.

Example.—Given a 6-pitch gear to find the thickness of tooth at the pitch line. 1.5708 divided by 6 (the diametral pitch of the gear) gives 0.262, the thickness of tooth at the pitch line.

Table V gives the thickness of tooth at the pitch line for the different diametral pitches.

Depth of Tooth

After we get the gear blank turned up, we next want to know how deep to run the gear cutter in order to get a perfect tooth. The working depth of the tooth we have shown to be equal to the sum of the addendum and dedendum, or $\frac{1}{P} + \frac{1}{P} = \frac{2}{P}$, and the whole depth of the tooth must equal $\frac{2}{P}$ plus the clearance.

Using the Brown & Sharpe standard, we have $\frac{2}{P} + \frac{0.157}{P} =$

$$W = \frac{2.157}{P} \qquad (10)$$

in which 1 = whole depth of tooth; P = diametral pitch.

Example.—Given a gear of 6 diametral pitch, to find the depth of cut to be taken to get a perfect gear tooth.

Divide 2.157 by 6 (diametral pitch) and the quotient 0.359 is the depth to be cut in the gear.

If we had the circular pitch given, to find the depth of tooth, we could substitute in formula (10) the value of P as given in the formula (2), and we would have

$$W = \frac{2.157}{3.1416 \div P'}$$

If the number of teeth + 2 divided by the pitch equals the outside diameter, then the outside diameter multiplied by the pitch must equal the number of teeth + 2, and then the pitch must equal the number of teeth + 2 divided by the outside diameter, which, expressed as a formula, is:

$$\frac{N+2}{O}=P \qquad (14)$$

in which N = number of teeth in gear; O = outside diameter; P = diametral pitch.

Example.—Given a gear of 36 teeth and 3 1, 6-inch outside diameter; to find the diametral pitch.

36 (the number of teeth) + 2 = 38.

38 ÷ 3 1/6 = 12, the diametral pitch of the gear.

Pitch Diameter

1. Having given the outside diameter and the pitch, to find the pitch diameter. The distance from the pitch diameter to the outside diameter is $\frac{1}{P}$, as explained in formula

$$S=\frac{1}{P} \qquad (4)$$

and as this is to be added on each side of the center, the outside diameter of the gear must be equal to the pitch diameter plus $\frac{2}{P}$. If this is so, then $\frac{2}{P}$ subtracted from the outside diameter will give the pitch diameter, or

$$D=O-\frac{2}{P} \qquad (15)$$

in which D = pitch diameter; O = outside diameter; P = diametral pitch.

Example.—Given a gear 3 1/6 inches outside diameter and 12 pitch; To find the pitch diameter.

3 1/6 (the outside diameter) — 2/12 = 3 inches, the pitch diameter of the gear.

2. Having given the outside diameter and number of teeth, to find the pitch diameter. Multiply the outside diameter by the number of teeth, and divide by the number of teeth plus 2.

We have shown in formula (5) that the outside diameter equals the number of teeth + 2 divided by pitch, or

$$O=\frac{N+2}{P} \qquad (5)$$

and in the formula (13) that pitch equals the number of teeth divided by the pitch diameter, or

$$P = \frac{N}{D} \qquad (13)$$

Now, if the outside diameter equals the number of teeth plus 2 divided by the diametral pitch (and the diametral pitch equals the number of teeth divided by the pitch diameter), then the outside diameter must be equal to the number of teeth plus 2, divided by a fraction with the number of teeth as numerator and the pitch diameter as denominator. This is simply substituting the value of the pitch as shown in formula (13) for the pitch in formula (5), and expressed as a formula, is:

$$O = \frac{N + 2}{N \div D}$$

Multiplying both sides of the equal sign by $\frac{N}{D}$ we have

$$O \times \frac{N}{D} = N + 2, \text{ or } \frac{O \times N}{D} = N + 2,$$

and now, multiplying both sides by D, we have

$$O \times N = (N + 2) \times D$$

and dividing both sides by $N + 2$ we get

$$\frac{O \times N}{N + 2} = D, \text{ or } D = \frac{O \times N}{N + 2} \qquad (16)$$

in which D = pitch diameter; N = number of teeth; O = outside diameter.

Example.—Given a gear 3 1/6 inches outside diameter and 36 teeth. to find the pitch diameter.

3 1/6 (the outside diameter) multiplied by 36 (the number of teeth) equals 114. 36 (the number of teeth) + 2 = 38. 114 ($O \times N$) divided by 38 ($N + 2$) = 3 inches, the pitch diameter of the gear.

Number of Teeth

1. Having given the pitch diameter and pitch, to find the number of teeth. Multiply the pitch diameter by the pitch, and the product will be the number of teeth in the gear.

The diametral pitch of a gear equals the number of teeth for each inch of pitch diameter; hence, if we multiply the pitch by the number of inches of pitch diameter we will have the number of teeth in the gear, which, expressed as a formula, is:

$$N = P \times D \qquad (17)$$

in which P = diametral pitch; D = pitch diameter.

Example.—Given a gear 3 inches pitch diameter and 12 diametral pitch, to find the number of teeth. 3 (pitch diameter) multiplied by 12 (diametral pitch) = 36, the number of teeth in the gear.

2. To find the number of teeth, having given the outside diameter and pitch. Multiply the outside diameter by the pitch and subtract 2, or

$$N = (O \times P) - 2 \qquad (18)$$

CHART FOR DIMENSIONS OF SPUR GEARS

No.	To Find	Rule	Formula
1	Diametral Pitch	Divide 3.1416 by circular pitch	$P = \frac{3.1416}{P'}$
2	Circular Pitch	Divide 3.1416 by diametral pitch	$P' = \frac{3.1416}{P}$
3	Pitch Diameter	Divide number of teeth by diametral pitch	$D = \frac{N}{P}$
4	Pitch Diameter	Multiply number of teeth by circular pitch and divide the product by 3.1416	$D = \frac{NP'}{3.1416}$
5	Center Distance	Add the number of teeth in both gears and divide the sum by two times the diametral pitch	$C = \frac{N_g + N_p}{2P}$
6	Center Distance	Multiply the sum of the number of teeth in both gears by circular pitch and divide the product by 6.2832	$C = \frac{(N_g + N_p)P'}{6.2832}$
7	Addendum	Divide 1 by diametral pitch	$S = \frac{1}{P}$
8	Addendum	Divide circular pitch by 3.1416	$S = \frac{P'}{3.1416}$
9	Clearance	Divide 0.157 by diametral pitch	$F = \frac{0.157}{P}$
10	Clearance	Divide circular pitch by 20	$F = \frac{P'}{20}$
11	Whole Depth of Tooth	Divide 2.157 by diametral pitch	$W = \frac{2.157}{P}$
12	Whole Depth of Tooth	Multiply 0.6866 by circular pitch	$W = 0.6866\,P'$
13	Thickness of Tooth	Divide 1.5708 by diametral pitch	$T = \frac{1.5708}{P}$
14	Thickness of Tooth	Divide circular pitch by 2	$T = \frac{P'}{2}$
15	Outside Diameter	Add 2 to the number of teeth and divide the sum by diametral pitch	$O = \frac{N+2}{P}$
16	Outside Diameter	Multiply the sum of the number of teeth plus 2 by circular pitch and divide the product by 3.1416	$O = \frac{(N+2)P'}{3.1416}$
17	Diametral Pitch	Divide number of teeth by pitch diameter	$P = \frac{N}{D}$
18	Circular Pitch	Multiply pitch diameter by 3.1416 and divide by number of teeth	$P = \frac{3.1416\,D}{N}$
19	Pitch Diameter	Subtract two times the addendum from outside diameter	$D = O - 2S$
20	Number of Teeth	Multiply pitch diameter by diametral pitch	$N = P \times D$
21	Number of Teeth	Multiply pitch diameter by 3.1416 and divide the product by circular pitch	$N = \frac{3.1416\,D}{P'}$
22	Outside Diameter	Add two times the addendum to the pitch diameter	$O = D + 2S$
23	Length of Rack	Multiply number of teeth in rack by 3.1416 and divide by diametral pitch	$L = \frac{3.1416\,N}{P}$
24	Length of Rack	Multiply the number of teeth in the rock by circular pitch	$L = NP'$

Digitized by Google

in which N = number of teeth; O = outside diameter; P = diametral pitch.

This formula is simply the reverse of formula

$$\frac{N+2}{P}=O \qquad (5)$$

If the outside diameter equals the number of teeth + 2 divided by the pitch, which we have already proved, than the number of teeth plus 2 must equal the outside diameter multiplied by the pitch, and subtracting 2 from this result we have the number of teeth in the gear.

Example.—Given a gear 3 1/6 inches outside diameter and 12 pitch, to find the number of teeth. Multiply 3 1/6 (outside diameter) by 12 (the pitch) and we have 38, and subtracting 2 from this result we have 36, the number of teeth in the gear.

Outside Diameter

To find the outside diameter having given the pitch diameter and pitch. Divide 2 by the pitch and add to the pitch diameter, or

$$O=D+\frac{2}{P} \qquad (19)$$

in which O = outside diameter,
D = pitch diameter,
P = pitch.

The addendum of a gear is $\frac{1}{P}$ [formula (4)] and this, added on each side of the pitch diameter, gives the outside diameter.

Example.—Given a gear 3 inches pitch diameter and 12 pitch; to find the outside diameter.

3 (pitch diameter) plus 2/12 $\left(\frac{2}{P}\right)$ = 3 1/6 inches, the outside diameter of the gear.

Summary of Formulas

In the chart on page 20, the rules and formulas for the dimensions of spur gears have been grouped together, so that they may be more easily found when wanted. The same reference letters are used as have previously been employed in deducing the various formulas. It will be noticed that with the aid of the formulas given in the chart, each dimension can be calculated either from the diametral or circular pitch. The first sixteen formulas are placed in the order in which they would naturally present themselves to the designer when determining the dimensions of a pair of spur gears. Nos. 17 to 22 give additional formulas for various conditions of known and unknown factors. Formulas Nos. 23 and 24 are for racks.

CHAPTER III

INTERNAL SPUR GEARS

As indicated by its name, the internal gear is one having teeth formed on an interior pitch surface instead of an exterior one. In a word, it is an ordinary spur gear turned inside out. At the right of Fig. 10 is shown a sketch of such a gear, meshing with a spur pinion; at the left is shown a pair of spur gears having the same number and pitch of teeth as the pinion and internal gear on the right. By tracing the motion in each figure, it will be seen that internal action causes the

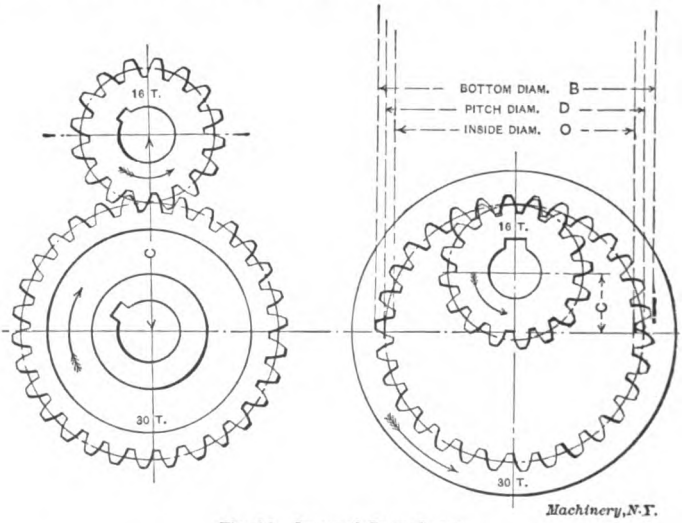

Fig. 10. Internal Spur Gears

two members to turn in the same direction, while external action produces opposite rotation.

The Uses of Internal Gearing

There are some advantages attaching to the use of internal gears for particular applications, as compared with external gears of the same pitch and number of teeth. For one thing, an internal gear has its teeth and that of its pinion protected to a very marked degree from inflicting or receiving injury, often making the use of a gear guard unnecessary if the parts are properly designed for that purpose. Owing to the fact that the cylindrical pitch surfaces in internal gearing have their curvature in the same direction, the teeth of the pinion approach and mesh with those of its mate somewhat more gradually and easily than when they are meshing with an external gear. This tends toward smoothness and quietness in running, as well as giving a slight-

ly longer contact for each tooth. Another characteristic which is often an advantage will be seen from a study of Fig. 10. In each case shown we have gears of the same pitch and number of teeth. The internal gears evidently figure out to a much smaller center distance than the external gears. This matter is of importance when it is necessary to transmit considerable power between shafts placed quite close together.

In contrast with the advantages just mentioned, the chief factor which has limited the use of the internal gear, has been the difficulty and expense of making it. This difficulty has not been insuperable for cast gearing, but, until the introduction of recent processes, the cutting of internal teeth has been tedious and unsatisfactory.

Rules for Designing Internal Gearing

Neglecting for the time being the modifications which have to be made in the standard proportions to get rid of interference, it may be said that the usual thing to do in designing internal gearing is to follow exactly the dimensions of the standard system as used for external spur gearing. Practically the only modifications required in the rules given on page 20 are those made necessary by the fact that the center distance, in internal gearing, is equal to the difference between the two pitch radii, instead of to their sum. Besides this, we have of course to reckon with the fact that the teeth are turned inside out, so that the bottom or root diameter is larger than the pitch diameter.

The only new term is "Inside Diameter," which takes the place of the outside diameter of external spur gearing. It is, of course, the inside diameter of the blank before the teeth are cut, and it is marked *O* in Fig. 10. The following are the rules which must be changed:

No. 5 will read: *To find the center distance, subtract the number of teeth in the pinion from the number of teeth in the gear and divide the remainder by 2 times the diametral pitch.*

No. 6 will read: *To find the center distance, multiply the difference of the numbers of teeth in the gear and pinion by the circular pitch and divide the product by* 6.2832.

No. 15 will read: *To find the inside diameter, subtract 2 from the number of teeth and divide the remainder by the diametral pitch.*

No. 16 will read: *To find the inside diameter, subtract 2 from the number of teeth, multiply the remainder by the circular pitch, and divide the product by* 3.1416.

No. 19 will read: *To find the pitch diameter, add twice the addendum to the inside diameter.*

No. 22 will read: *To find the inside diameter, subtract twice the addendum from the pitch diameter.*

Interference

In laying out the shape of teeth for internal gearing we have to look out for two kinds of interference which are almost sure to be met with. The points of the rack teeth in the 14½-degree involute system are relieved to avoid the interference with the flanks of small pinions, and the points of internal gear teeth have to be relieved for the same

stitute steel in some form for cast iron as a material for gears. This tendency is especially marked in machine tool design.

It is common and good practice to use a composition metal like brass or bronze for the smaller of a pair of lightly loaded gears which have to run at high speed. When such gears are run with a large gear of cast iron, the difference in texture between the two materials used lessens the friction, and there is a gain on the score of noiselessness as well. Brass may be used where the duty is very light; higher grades of material, like phosphor bronze, are used for heavier service at high speed. When the service becomes quite severe, the materials in the gears should be reversed, so that the larger one is of phosphor bronze, and the smaller one of steel. The pinion has thus its maximum of strength and durability, at the same time that the advantages resulting from the use of dissimilar materials are retained.

Where noiselessness is a prime consideration, rawhide is extensively used. This non-metallic substance possesses the required structure to deaden the sound vibrations, together with a considerable degree of toughness, when properly cured. Manufacturers of gear blanks from this material cure the hide by processes which they claim give far better results for this service than can be obtained by ordinary means. The material is not injured by oil, though it does not require lubrication in service; but there has been some complaint of its swelling and losing its shape when exposed to moisture. Trouble from this source may, however, have been due to the use of an inferior grade of material, because thousands of rawhide pinions are in satisfactory daily use, under all sorts of conditions, at the present time. It is a somewhat more costly material than the others commonly used, but its compensating freedom from noise is often worth more than the added expense. But one of a pair of gears—generally the pinion—is made from this substance, the gear being of steel or iron. Gears as large as 40 inches in diameter have been made from this material.

Fiber is another material used under about the same conditions as rawhide. It is not as strong, and it suffers under the disadvantage of being difficult to machine, owing to its peculiar gritty structure. It is also liable to swell in the presence of moisture. It has an advantage over rawhide in that it is comparatively inexpensive, and may be purchased in a variety of sizes of bars, rods, tubes, etc., so that it is convenient to use at short notice. For light duty at high speed it serves its purpose very well.

Racks of large size, such as those used for driving the platens of metal planers, are made of iron or steel castings. Smaller ones are made from bar steel stock, either machine steel finished all over, or cold rolled steel. The latter material does not require other machining than the cutting of the teeth, being accurately finished to certain convenient sizes in the process of rolling. The cutting of the teeth causes the stock to bend, however, necessitating a straightening operation.

Strength of Gear Teeth

The rule in most common use for determining the strength of gears is the one proposed by Mr. Wilfred Lewis, and described by him in a

paper read before the Engineers' Club of Philadelphia. The utility of this rule is due to its simple form, to the fact that it takes into account a greater number of factors than does any other, and to the fact that the effect of each of these factors is rationally expressed in the formula.

Table VII may be used for finding the allowable unit fiber stress to use in the Lewis formula, for any given speed, for different materials. The values for steel and cast iron are those originally suggested, altered slightly to agree with formula (2), given in the chart on page 29; those for phosphor bronze have been added by the author. It will be noted that two columns of values are given for each material; as

TABLE VII. WORKING STRESSES FOR USE WITH THE LEWIS FORMULA

		Safe Working Unit Stress = S					
		Cast Iron		Phosphor Bronze		Steel	
Velocity in Feet per Minute = V	Strength Factors	Ordinary Workmanship	High-grade Workmanship	Ordinary Workmanship	High-grade Workmanship	Ordinary Workmanship	High-grade Workmanship
0	1.000	6000	8000	9000	12000	15000	20000
100	0.857	5150	6850	7700	10300	12800	17100
200	0.750	4500	6000	6750	9000	11200	15000
300	0.666	4000	5350	6000	8000	10000	13300
450	0.571	3400	4550	5150	6850	8550	11400
600	0.500	3000	4000	4500	6000	7500	10000
900	0.400	2400	3200	3600	4800	6000	8000
1200	0.333	2000	2650	3000	4000	5000	6650
1800	0.250	1500	2000	2250	3000	3750	5000
2400	0.200	1200	1600	1800	2400	3000	4000

explained, the first set of values may be used for workmanship of ordinary grade, while the other is permissible with a higher grade. The second column, of strength factors, may be used for finding the allowable working fiber stress to use for any given speed, when the safe static stress is known; to find the fiber stress, multiply the safe static stress by the strength factor. Formula (2) on page 29 may be used for the same purpose, giving results closely approximating the values of Table VII.

The variable factor introduced into the problem by the varying shape of teeth of the same pitch in gears of different numbers of teeth, is taken care of by introducing in the formula the outline factors Y given in the chart on page 29. These factors are given for that arrangement of the formula which applies to diametral pitches.

The formulas in the chart take no account of any such limitation of the width of face for a gear of given pitch as obtains in practice. The strength is made to increase directly with the width of face, without limit. In practice, if the face is too long in proportion to the size of the tooth, we cannot be sure that each tooth of the gear has a full

bearing over its whole length on its mating tooth in the other gear. The shafts on which the two are mounted may not be parallel, or, if originally parallel, they may deflect under the strain of the load transmitted. For reasons like this, in ordinary commercial work, the width of face may be considered as well proportioned when it equals, in inches, 8.75 divided by the diametral pitch. As a formula, this gives us $A = \frac{8.75}{P}$.

In cases where accurate workmanship can be depended on, there is a gain in using teeth of wider face and finer pitch than would be allowed by the formulas on page 29. There is a gain in efficiency, smoothness of action, and noiselessness, especially at high speeds. In fact, the width of face of a gear may well be made to depend in part on the speed at which it is run, as well as on the pitch, it being taken for granted, of course, that the pitch and width are such as to give the required strength. A suggested relation between the speed and the face is expressed in the following rule, offered by an English engineer as having given good results in an extended practice. It has been changed to derive the answer directly from the diametral pitch, instead of from the circular pitch, as originally given: *To find a well-proportioned width of face for carefully made gearing, multiply the square root of the pitch line velocity in feet per minute by* 0.15, *add* 9 *to the product, and divide the result by the diametral pitch.* As a formula, this gives us:

$$A = \frac{0.15\sqrt{V} + 9}{P}$$

Example.—What should be the pitch and the width of face of a steel pinion, 4 inches in pitch diameter, the teeth shaped according to the 14½-degree involute system, running 750 revolutions per minute, and transmitting 10 horse-power; the workmanship is high grade, and the width of the face is to be proportioned according to the rule and formula given immediately above?

The velocity at the pitch line is $= 0.262\ D\ R = 0.262 \times 4 \times 750 =$ 786 feet per minute. (See formula (1) in the chart for strength of spur gears.) The allowable running stress for a static stress of 20,000 pounds per square inch is found by formula (2):

$$S = 20{,}000 \times \frac{600}{600 + 786} = 8{,}660 \text{ pounds per square inch.}$$

The load at the pitch line is equal to

$$\frac{10 \times 33{,}000 \times 12}{\pi \times 4 \times 750} = 420 \text{ pounds.}$$

Assume 5 diametral pitch as a trial pitch for the teeth; then the number of teeth equals $5 \times 4 = 20$. Transposing formula (3):

$$W = \frac{S\ A\ Y}{P} \text{ gives us } A = \frac{W\ P}{S\ Y}.$$

List of Reference Letters.

D = pitch diameter of gear in inches.

R = revolutions per minute.

V = velocity in ft. per min. at pitch diameter.

S_s = allowable static unit stress for material.

S = allowable unit stress for material at given velocity.

A = width of face.

Y = outline factor (see table below).

P = diametral pitch (if circular pitch is given, divide 3.1416 by circular pitch to obtain diametral pitch).

C = pitch cone radius.

W = maximum safe tangential load in pounds at pitch diameter.

H.P. = maximum safe horse-power.

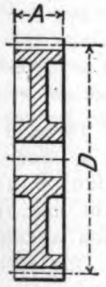

Table of Outline Factors (Y).

Number of Teeth	Outline Factor = Y. $14\frac{1}{2}°$ Involute (Std.) and Cycloidal	Outline Factor = Y. 20° Involute	Number of Teeth	Outline Factor = Y. $14\frac{1}{2}°$ Involute (Std.) and Cycloidal	Outline Factor = Y. 20° Involute
12	0.210	0.245	27	0.314	0.349
13	0.220	0.261	30	0.320	0.358
14	0.226	0.276	34	0.327	0.371
15	0.236	0.289	38	0.336	0.383
16	0.242	0.295	43	0.346	0.396
17	0.251	0.302	50	0.352	0.408
18	0.261	0.308	60	0.358	0.421
19	0.273	0.314	75	0.364	0.434
20	0.283	0.320	100	0.371	0.446
21	0.289	0.327	150	0.377	0.459
23	0.295	0.333	300	0.383	0.471
25	0.305	0.339	Rack	0.390	0.484

Use rules and formulas 1 to 4 in the order given.

No.	To Find	Rule	Formula
1	Velocity in ft. per min. at the pitch diameter	Multiply the product of the diameter in inches and the number of revolutions per minute, by 0.262	$V = 0.262\,DR$
2	Allowable unit stress at given velocity	Multiply the allowable static stress by 600 and divide the result by the velocity in feet per minute plus 600	$S = S_s \times \frac{600}{600+V}$
3	Maximum safe tangential load at pitch diameter	Multiply together the allowable stress for the given velocity, the width of face, the tooth outline factor; divide the result by the diametral pitch	$W = \frac{SAY}{P}$
4	Maximum safe Horse-Power	Multiply the safe load at the pitch line by the velocity in feet per minute, and divide the result by 33,000	$HP = \frac{WV}{33{,}000}$

Apply this transposed formula and find a trial width of face (factor Y is given in the table in the chart):

$$A = \frac{420 \times 5}{8{,}660 \times 0.283} = 0.9 \text{ inch, approximately.}$$

For 5 pitch, however, according to the formula

$$A = \frac{0.15\sqrt{V} + 9}{P}$$

the width of face should be

$$A = \frac{0.15\sqrt{786} + 9}{5} = 2.64 \text{ inch.}$$

Thus, our pitch is evidently too coarse. Repeated trials show that if we make calculations for 9 diametral pitch the results from the two formulas for width of face agree fairly well. Thus:

$$\text{Number of teeth} = 9 \times 4 = 36.$$

$$A = \frac{420 \times 9}{8{,}660 \times 0.332} = 1.32 \text{ inch.}$$

$$A = \frac{0.15\sqrt{786} + 9}{9} = 1.4 \text{ inch.}$$

We may, therefore, settle on 9 diametral pitch and 1⅜-inch width of face, as the dimensions to which the gear ought to be made.

It will be noted that nothing was said about rawhide in the table on page 27, giving the allowable stresses for different materials at different velocities. There is not as much information available as might be desired on the strength of rawhide pinions. One prominent firm, the New Process Raw Hide Co., makes a regular practice of replacing high speed cast iron pinions with those made of rawhide, of the same dimensions. Where, however, a rawhide pinion is to replace a steel gear, working under severe conditions, a special construction is used, in which the weaker material is strengthened by a bronze reinforcement.

Mr. Diefendorf, the chief engineer of the New Process Raw Hide Co., gives the following information on this subject: "Our published statement, that cast iron pinions can be replaced with rawhide ones of the same pitch and number of teeth, holds good down to a peripheral velocity of about 1,600 feet per minute. Figuring on a peripheral velocity of 1,800 feet per minute for a 15-tooth pinion, new process rawhide pinions are good for a load of 150 pounds per inch of face for a 1-inch circular pitch gear, with other pitches in proportion, up to a maximum load not to exceed 250 pounds per inch of face, beyond which we have found it undesirable to go, owing to the compression of rawhide under heavy loads. It would appear that the elastic limit and compression point should be taken into consideration more than the tensile strength, as the material will bend long before it shows any sign of breakage; in fact, it is owing to its elastic qualities that

our rawhide is able to withstand shocks at high speed that would possibly strip the teeth of cast iron pinions."

The standard German engineers' handbook, "Hütte," gives a rule which may be translated into the following form for English measurements: *To find the allowable load in pounds at the pitch line for a rawhide pinion, multiply the width of face in inches by from* 180 *to* 360, *and divide the product by the diametral pitch.* It will be seen that this gives much lower permissible loads than does the New Process Rawhide Co.'s rule, which reduces to a factor of about 470, in place of the 180 to 360 given in "Hütte." In both of these rules the strength is made independent of the velocity at the pitch line. Since decrease of strength with increase of velocity is due to impact, and since rawhide is a substance peculiarly fitted to absorb impact harmlessly, it is logical to assume that the effect of increasing the velocity is negligible. This accounts for the fact that a rawhide gear will be as strong as a cast iron one at high speeds, when it would appear very weak in comparison with it in a static test.

Durability of Gearing

A pair of gears figured by the rules we have just given, to be strong enough for the service they are to undergo, may or may not be so proportioned as to be commercially durable. By "commercially durable" gears, we mean those which will last well in comparison with the rest of the machine of which they are a part. In some classes of machinery, gears strong enough for their work would certainly be commercially durable. A rack and pinion, for instance, used to raise a sluice gate for a dam, if made strong enough, would evidently wear indefinitely, though they might rust away. It is plain that all gearing designed for occasional or intermittent use, even under heavy loads, is strong enough to wear well if it is strong enough to bear the load placed upon it. With gearing used for the continuous transmission of power, however, we cannot be sure of this. The gearing of a drive connecting a motor with a printing press, for instance, might conceivably be strong enough and yet not wear as long as the rest of the machine.

The pinion will naturally wear faster than its mate, since each of its teeth is in action a greater number of times per minute. To make the life of the two more nearly alike, it is customary to make them of different materials, as already mentioned, the pinion being made of the more durable one. Thus, a combination of steel pinion and cast iron gear is common and occasionally conditions are found which warrant the expense of a hardened steel pinion and a phosphor bronze gear. The use of the better material in the smaller gear of the pair is proper from the standpoint of strength as well as from that of durability. An examination of the Lewis outline constants as tabulated in the preceding section of this chapter, will show that the teeth of the pinion are always weaker than those of the gear; so it is necessary, if an excess of strength is to be avoided in the gear, to make the pinion of the stronger material; but if the pinion is a little less durable

As the number of teeth for the gear becomes still larger, the increasing weight of the wheel may be lightened by cutting out relieving spaces in the web, or by abandoning the web entirely, and using arms for supporting the rim. This scheme, shown in Fig. 14, with arms of oval section, is the one best adapted for small and medium sized gear

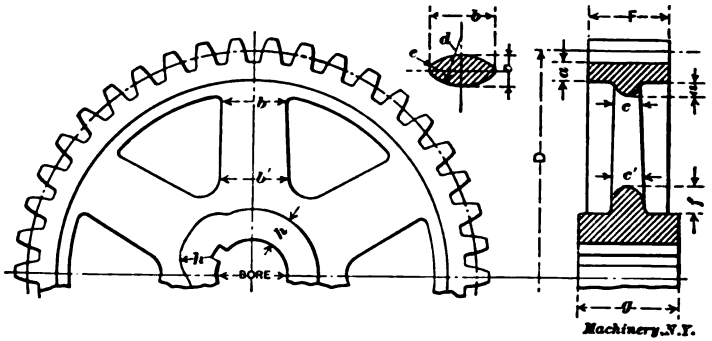

P = diametral pitch, P' = circular pitch.

$a = 1.57 \div P = 0.5\ P'$	$f = 2.00\ P = 0.65\ P'$
$b = 6.28 \div P = 2.0\ P'$	$g = F + 0.025\ D$
$c = 3.14 \div P = P'$	$h = 0.44 \times$ bore
$d = 4.71 \div P = 1.5\ P'$	$b' = b +$ ¾ inch per foot
$e = 0.79 \div P = 0.25\ P'$	$c' = c +$ ¾ inch per foot

Fig. 14. Dimensions of Spur Gears with Oval Arms

blanks, and is often used on the largest work as well. It is the handsomest of all designs of gear wheels, when it is in harmony with the rest of the machine to which it belongs. It requires somewhat more metal for the same strength than do the two designs next shown. It is

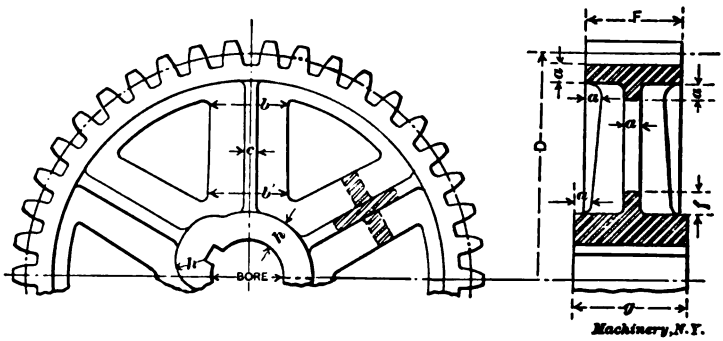

P = diametral pitch, P' = circular pitch.

$a = 1.57 \div P = 0.5\ P'$	$g = F + 0.025\ D$
$b = 7.85 \div P = 2.5\ P'$	$h = 0.44 \times$ bore
$c = 0.94 \div P = 0.3\ P'$	$b' = b +$ ¾ inch per foot
$f = 2.20 \div P = 0.7\ P'$	

Fig. 15. Dimensions of Spur Gears with Ribbed Arms

very easily molded. Suitable dimensions for wheels of various sizes made in this way, are tabulated below the illustration.

For the largest gears, made of steel, cast iron or bronze castings, wheels with arms of + or H-section are largely used. Dimensions

for wheels of these types are given in Figs. 15 and 16. In these designs, the metal is so distributed as to give a high degree of rigidity for the weight. These two forms, particularly that in Fig. 16, are more difficult to mold than those previously shown. The latter form is better for gears whose faces are very wide in proportion to their pitch, than either of the two in Figs. 14 and 15.

The tabular dimensions given for the various forms of wheels are to be considered as suggestive rather than authoritative. The tables have been in constant use for some years, however, and have proved to be very satisfactory. "Draft," for removing the patterns from the sand in molding, is not shown in any of the illustrations. It should be provided liberally, and should be added to the dimensions given, rather than taken off.

The Governing Conditions in the Design of Gearing

The problem of gear design is one of materials and dimensions. The considerations on which the designer bases his choice of materials and

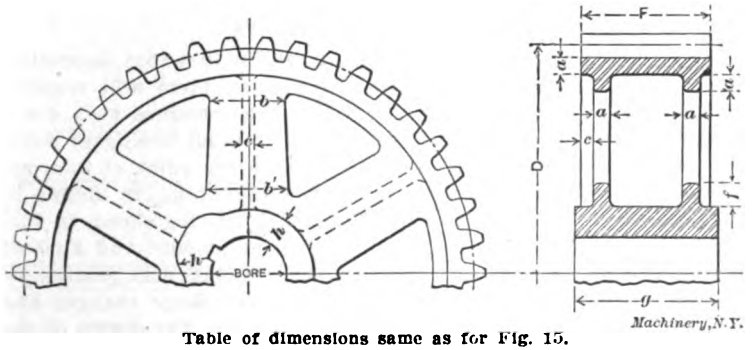

Table of dimensions same as for Fig. 15.

Fig. 16. Spur Gear with Arms of H-section

dimensions are those of strength, durability, efficiency, smoothness of action, noiselessness and cost. The gear cannot attain perfection in all these particulars, as some of them are mutually hostile; the item of cost, especially, has to be sacrificed to make a gain in any other direction. The problem of design is thus one of compromise, and the designer has only his judgment to rely on in determining the relative importance of the various considerations.

It is possible, however, to lay down a few simple rules along this line. The prime consideration is that of strength. If the teeth of the gear are not strong enough to transmit the pressure they are calculated on to bear, the gear will break, and the other virtues it may possess in the way of cheapness, noiselessness, etc., will be of no avail. As has already been stated, in gearing subjected to occasional use only, the durability is sufficient for all practical purposes if the strength is sufficient; but there is a possibility that gearing transmitting power at high speed may wear out before it breaks. Where gearing is used, as in automatic machinery, primarily to obtain certain desired movements in the mechanism, without requiring the transmission of any

drawing. This means that the hole is to be bored and reamed until it will make a good push fit for a standard plug gage of the size given. It will be noted that all the dimensions needed by the workman who turns the blank, are appended to the figure, while those needed by the workman who cuts the teeth are given in tabular form.

The face view of the gear on the left is needed only for showing the number and dimensions of the arms to the pattern-maker. For pinions and webbed gears it may be omitted. It is not necessary in standard gearing to show the shape of the teeth, so the side view is given

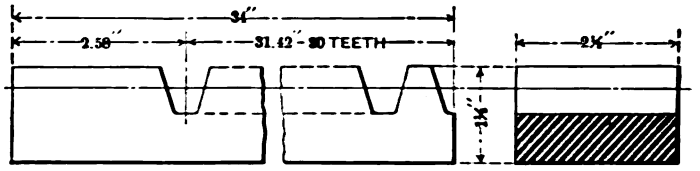

RACK
1 WANTED - MACH. STEEL
FINISH ALL OVER

DATA FOR CUTTING

DIAMETRAL PITCH	3
WHOLE DEPTH OF TOOTH	0.7190"
ADDENDUM	0.3333"
THICKNESS OF TOOTH	0.5236"
NO. OF CUTTER	1

Machinery, N.Y.

Fig. 18. Example of Properly Dimensioned Rack Drawing

as showing the blank before the teeth are cut. The pitch and bottom circles are represented by broken and dotted circles, respectively. The shape and kind of teeth (whether involute or cycloidal) is taken care of by the cutter called for—specified by its proper number if it is involute, and by its letter if it is cycloidal.

In Fig. 18 is shown a model drawing of a rack, which is self-explanatory. Here, as in the previous case, the blank dimensions are shown attached to the figure of the rack, while the cutting dimensions are tabulated. The student may check up the dimensions given with the rules for gears and racks, page 20, if he desires practice in such calculations.

The expressions chordal tooth thickness and corrected addendum given in the table in Fig. 17, are terms which are not defined in this book. They refer to the correction of the tooth thickness and the addendum for the curvature of the pitch line—a refinement which is not commonly practiced. Full explanation of the calculations required for obtaining these dimensions have not been considered to be within the scope of this book, but will be found in "Formulas in Gearing," published by the Brown & Sharpe Mfg. Co., Providence, R. I. For ordinary work it is sufficient to simply give the addendum and tooth thickness as calculated by Rules 7, 8, 13 and 14, page 20.

CHAPTER VI

VARIATION OF THE STRENGTH OF GEAR TEETH WITH THE VELOCITY*

The generally accepted formula for calculating the strength of gear teeth is that proposed by Mr. Wilfred Lewis, first published in the Proceedings of the Engineers' Club of Philadelphia, January, 1893, and referred to in a preceding chapter.

The merit of this formula lies in the great number of variables taken into account as compared with other rules in more or less common use, and in the fact that these variables are rationally considered. The effect of each of them can be calculated with some assurance, with

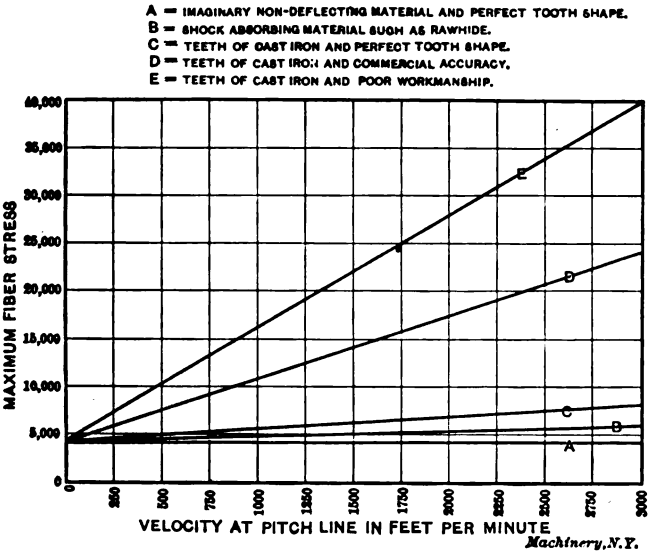

Fig. 19. Hypothetical Diagram showing the Relation of the Velocity to the Fiber Stress

the single exception of the influence of the velocity on the safe stress. In the fifteen years since the formula was first proposed, the original values for the stress as affected by the velocity have been largely used. Many designers, however, have felt that these values are rather unsatisfactory, although most of them will agree that they err rather on the side of safety than otherwise. By referring to Mr. Lewis' original paper it will be seen that these values were not given as being definitely determined, but merely as agreeing well with successful cases met with in his own practice. The following is a general analysis of the conditions involved.

* MACHINERY, January, 1908.

A variation in the strength of the teeth of a gear, due to a variation in the velocity, can be due, of course, to but one thing—impact. To illustrate this idea, and to show the cause of the impact, we will study the action of gearing under three different conditions.

1. *Gears of an imaginary undeflectable material.*—In Fig. 19 is a diagram in which the horizontal distances give velocity in feet per minute, and vertical distances give stresses in pounds per square inch, starting in this case at 4,000, which is assumed to be the maximum fiber stress in the gear we are considering, due to the load at the pitch line, which is supposed to be constant at all speeds. If the teeth of this gear are perfectly formed and well fitted together, so that there is

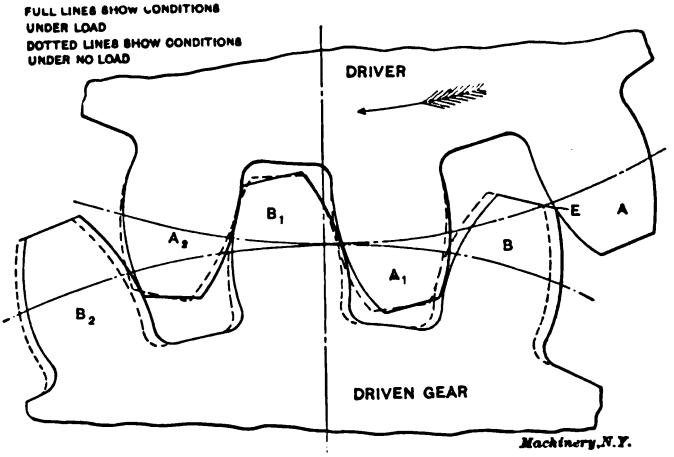

Fig. 20. The Action of Gear Teeth under Load, Greatly Exaggerated

no back lash, if the power is delivered to them steadily and smoothly, and the mechanism they drive runs without shock, any disturbance of the even movement will be impossible, and impact will be entirely absent. In the diagram in Fig. 19, then, there will be no rise of maximum fiber stresses with the velocity, so that the horizontal line *A* will show the conditions for this imaginary case.

2. *With commercial material and theoretically accurate workmanship.* The conditions in this case are shown in Fig. 20, with all the phenomena greatly exaggerated. The full lines show the conditions under load, while the dotted outlines show the conditions when the load is removed from the driven gear. The teeth A_1, B_1, and A_2, B_2, carrying the load, are deflected by it, as shown. Tooth *B*, just about to come into contact with tooth *A*, is on that account shifted from its normal position; it should be located as shown by the dotted lines. If it were in this position, it would come in contact with tooth *A* under mathematically perfect conditions, and there would be no shock of engagement. As it is, the two come suddenly into action as shown at *E*, under different conditions than those contemplated by the design, thus the contact takes place in the form of a slight blow, after which

the teeth are deflected more and more, until they have taken up their share of the load, as shown later at A_1 and B_1. If the gears are moving very slowly, the deflection takes place very slowly, and the problem is practically a static one. If the gears are running at a high velocity, the problem becomes essentially a dynamic one, and the stresses are greater than with the slow speed. The increase in stress with the increase in speed for this second case could probably be represented by a line something like *C*, in Fig. 19.

3. *With commercial materials and commercial accuracy.* This is, of course, the practical case to consider. A line to show the relation of the velocity to the maximum fiber stress for a given gear, would very probably look something like *D* in Fig. 19. This is, in fact, approximately the line which embodies the conclusions of the Lewis tables for a static stress of 4,000 pounds. It is considerably higher than line *C*, because impact due to irregular tooth outlines is added to the impact due to the deflection.

Practical Considerations Affecting Design

The fact that the variation of the strength with the velocity is due to impact, suggests also a number of points relating to design.

1. *Value of accuracy.* It is evident that this theory of impact puts a premium on accuracy in workmanship for gears that are to run at high speed under a heavy load. It is probable that the strength of a given pair of gears may be cut in two if the tooth outlines are not carefully determined, and if the cutter is not set centrally. This suggests the desirability of a greater sub-division of the standard cutter series for work of this kind.

2. *Resilience of design and materials.* In high-speed gearing it is evident that the shock due to the impact should be absorbed as quickly and as fully as possible. This suggests the use, at abnormally high speeds, of rawhide, wood, etc., for one of the members of the pair of gears. The introduction of spring couplings or similar devices may also be desirable, especially where the other parts of the mechanism are liable to transmit shock to the gearing.

3. *Easing off the points of the tooth.* There has always been a sort of superstition that the points of the tooth should be eased off to make the action smoother. This is done, of course, in standard involute gears, though for another reason, that of avoiding interference with the flanks of the pinions. It can now be seen that there is a solid basis for this practice in all cases where gears are to run at such speeds that severe impact is liable to take place. Referring to Fig. 20, teeth *A* and *B* are taking up the load very suddenly, owing to the fact that they are out of step, due to the deflection of the other teeth momentarily carrying the load. Easing away the points of *A* and *B* would mitigate this sudden reception of the load, allowing the inevitable deflection to take place more slowly, with a consequent gain in the strength of the gear at high speeds.

Substituting these values in the general formula and reducing, we have for a 15-tooth cast iron spur pinion:

$$\text{H. P.} = 0.6\, P'^2 \sqrt{V} \quad \ldots\ldots (1)$$

By a similar process, we find for a 15-tooth cast steel spur pinion:

$$\text{H. P.} = 1.5\, P'^2 \sqrt{V} \quad \ldots\ldots (2)$$

For a bevel pinion, let

d = small diameter of bevel,

D = large diameter of bevel.

$$\text{Then H. P.} = \frac{SP'AY'V}{33{,}000} \times \frac{d}{D}.$$

As $\frac{d}{D}$ usually equals about $\frac{2}{3}$, we can say:

$$\text{H. P.} = \frac{SP'AY'V}{33{,}000} \times \frac{2}{3}$$

and for a 15-tooth cast iron bevel pinion,

$$\text{H. P.} = 0.4\, P'^2 \sqrt{V} \quad \ldots\ldots (3)$$

For a 15-tooth cast steel bevel pinion,

$$\text{H. P.} = P'^2 \sqrt{V} \quad \ldots\ldots (4)$$

We now wish to find V in terms of revolutions per minute. For a 15-tooth pinion, approximately:

$$V = \frac{15 \times \text{r.p m.} \times P'}{12} = 1.25 \text{ r.p.m.} \times P'.$$

Substituting this value in (1) we have:

$$\text{H. P.} = 0.6\, P'^2 \sqrt{1.25 \text{ r.p.m.} \times P'}.$$

$$\text{Squaring, H. P.}^2 = 0.36\, P'^4 (1.25 \text{ r.p.m.} \times P').$$

Reducing, and solving for P', we have for cast iron spur pinion:

$$P' = \sqrt[5]{\frac{2.22 \text{H.P.}^2}{\text{r.p.m.}}} \quad \ldots\ldots (5)$$

A similar substitution and reduction in formulas (2), (3) and (4) gives the following:

$$\text{For cast steel spur, } P' = \sqrt[5]{\frac{0.36 \text{ H. P.}^2}{\text{r.p.m.}}} \quad \ldots\ldots (6)$$

$$\text{For cast iron bevel, } P' = \sqrt[5]{\frac{5.\text{?} \text{ H. P.}^2}{\text{r.p.m.}}} \quad \ldots\ldots (7)$$

$$\text{For cast steel bevel, } P' = \sqrt[5]{\frac{0.8 \text{ H. P.}^2}{\text{r.p.m.}}} \quad \ldots\ldots (8)$$

For rapidly varying loads, or where there is much starting and stopping, it is well to reduce the safe stress to two-thirds that allowed by the above formulas. We then have:

For cast iron spur, H.P. $= 0.4\sqrt{P'^2}\,V$; $P' = \sqrt[5]{\frac{5\ \text{H.P.}^2}{\text{r.p.m.}}}$ ... (9)

For cast steel spur, H.P. $= P'^2\sqrt{V}$; $P' = \sqrt[5]{\frac{0.8\ \text{H.P.}^2}{\text{r.p.m.}}}$ ..... (10)

For cast iron bevel, H.P. $= 0.27\ P'^2\sqrt{V}$; $P' = \sqrt[5]{\frac{11.0\ \text{H.P.}^2}{\text{r.p.m.}}}$ (11)

For cast steel bevel, H.P. $= 0.67\ P'^2\sqrt{V}$; $P' = \sqrt[5]{\frac{1.8\ \text{H.P.}^2}{\text{r.p.m.}}}$ (12)

The fifth root can be easily determined by logarithms on the slide rule, or from the usual tables, but the values for the common cases are given later.

Corrections for Tooth Numbers

It now remains to determine the correction for different numbers of teeth.

As the teeth of pinions generally range from 12 to 30, we need not go outside these limits. Let $N =$ number of teeth. Plotting the Lewis values for Y' for this case, and determining the nearest curve, we find that the straight line formula:

$$Y' = \frac{2N + 45}{1{,}000}$$

expresses this curve very closely, as will be seen by the following comparative table:

No. of Teeth, N	Y' by Formula	Y' from Lewis' Tables	No. of Teeth, N	Y' by Formula	Y' from Lewis' Tables
12	0.069	0.067	19	0.083	0.087
13	0.071	0.070	20	0.085	0.090
14	0.073	0.072	21	0.087	0.092
15	0.075	0.075	23	0.091	0.094
16	0.077	0.077	25	0.095	0.097
17	0.079	0.080	27	0.099	0.100
18	0.081	0.083	30	0.105	0.102

Therefore, for other teeth, we can multiply the horse-power given in the above formulas by $\frac{2N + 45}{75}$, or more briefly by $0.027\,N + 0.6$.

Correction for Increased Velocity

We must also correct for the increased velocity of this larger pinion, *i. e.*, multiply the result by $\sqrt{\frac{N}{15}}$ or $0.26\sqrt{N}$. The continued product of these last two multipliers might be used, but this does not simplify the calculation. These corrections need seldom be applied for preliminary work.

To Find the Pinion Diameter

Lastly, to find the diameter of the pinion, approximately:

$$\text{diameter} = \frac{N \times P'}{\pi}, \text{ or}$$

$$\text{diameter} = 0.318\, N\, P',$$

or for a 15-tooth pinion,

$$\text{diameter} = 4.77\, P' \quad \ldots\ldots (13)$$

If diametral pitch is desired, it is sufficiently close to say:

$$\text{diametral pitch} = \frac{3}{P'} \quad \ldots\ldots (14)$$

The following formulas, therefore, Nos. (5) to (14) (as deduced above), give closely enough for all preliminary determinations, the size of pinion required of 15 teeth.

	Lewis' Tables	Stress ⅓ Lewis' Tables
Cast iron spur, $P' =$	$\sqrt[5]{\frac{2.22\ \text{H.P.}^3}{\text{r.p.m.}}}$	$\sqrt[5]{\frac{5.0\ \text{H.P.}^3}{\text{r.p.m.}}}$
Cast steel spur, $P' =$	$\sqrt[5]{\frac{0.36\ \text{H.P.}^3}{\text{r.p.m.}}}$	$\sqrt[5]{\frac{0.8\ \text{H.P.}^3}{\text{r.p.m.}}}$
Cast iron bevel, $P' =$	$\sqrt[5]{\frac{5.0\ \text{H.P.}^3}{\text{r.p.m.}}}$	$\sqrt[5]{\frac{11.0\ \text{H.P.}^3}{\text{r.p.m.}}}$
Cast steel bevel, $P' =$	$\sqrt[5]{\frac{0.8\ \text{H.P.}^3}{\text{r.p.m.}}}$	$\sqrt[5]{\frac{1.8\ \text{H.P.}^3}{\text{r.p.m.}}}$

$$\text{Diameter} = 4.77\, P'.$$

$$\text{Diametral pitch} = \frac{3}{P'}.$$

Practically, stock gears are made up to 3 inches circular pitch by ¼-inch steps, and a pitch of less than 1 inch is seldom used.

The following table will therefore determine the roots for the nearest common pitch:

No. or Root	Fifth Power	No. or Root	Fifth Power	No. or Root	Fifth Power
¾	0.24	2	32	3½	525
1	1	2¼	58	4	1,024
1¼	3	2½	98	4½	1,845
1½	8	2¾	158	5	3,125
1¾	16	3	243	6	7,776

In case the revolutions per minute of the pinion are less than 80, which is exceptionally slow, care must be taken in applying the for-

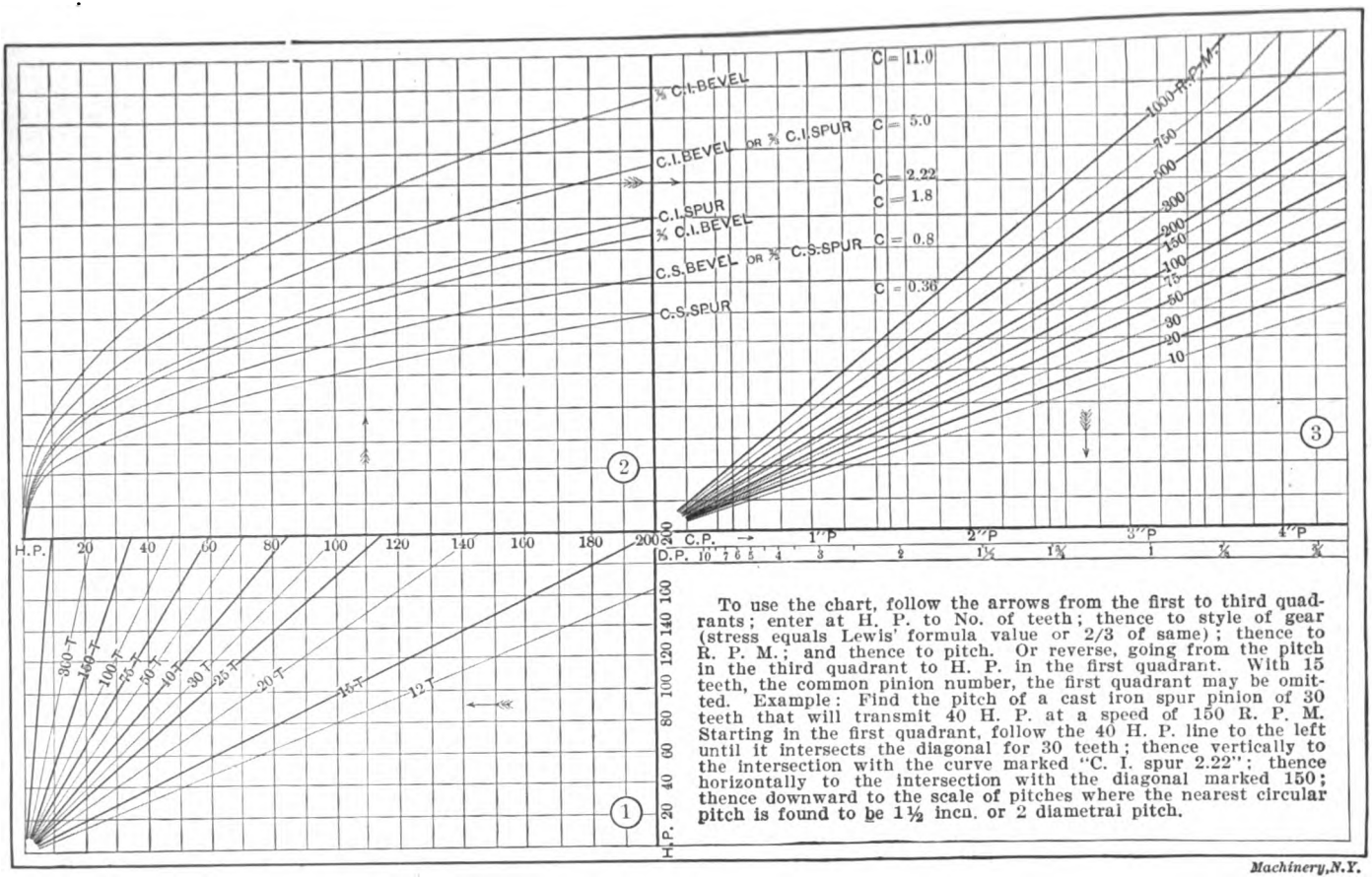
C.I. BEVEL
C.I. BEVEL OR C.I. SPUR
C.I. SPUR
C.S. BEVEL OR C.S. SPUR
C.S. SPUR
C = 11.0
C = 5.0
C = 2.22
C = 1.8
C = 0.8
C = 0.36
1000 H.P. PER M.
750
500
300
200
150
100
75
50
30
20
10
H.P.
C.P.
D.P.
1" P
2" P
3" P
4" P
360 T
160 T
100 T
75 T
50 T
40 T
30 T
25 T
20 T
15 T
12 T
1
2
3
To use the chart, follow the arrows from the first to third quadrants; enter at H. P. to No. of teeth; thence to style of gear (stress equals Lewis' formula value or 2/3 of same); thence to R. P. M.; and thence to pitch. Or reverse, going from the pitch in the third quadrant to H. P. in the first quadrant. With 15 teeth, the common pinion number, the first quadrant may be omitted. Example: Find the pitch of a cast iron spur pinion of 30 teeth that will transmit 40 H. P. at a speed of 150 R. P. M. Starting in the first quadrant, follow the 40 H. P. line to the left until it intersects the diagonal for 30 teeth; thence vertically to the intersection with the curve marked "C. I. spur 2.22"; thence horizontally to the intersection with the diagonal marked 150; thence downward to the scale of pitches where the nearest circular pitch is found to be 1½ inch, or 2 diametral pitch.
Machinery, N.Y.

Fig. 21. Three Quadrant Gear Chart for Solution of Spur and Bevel Gear Problems, based on Lewis' Formula; for 15-degree Involute and Cycloidal Teeth

mula, or the allowable stress may be exceeded. With a 15-tooth pinion:

80 r.p.m. = 100 feet per minute for 1-inch P'.
40 r.p.m = 100 feet per minute for 2-inch P'.
27 r.p.m = 100 feet per minute for 3-inch P'.
20 r.p.m = 100 feet per minute for 4-inch P'.

Chart for Rapid Solution of Gear Problems

A simple three quadrant chart, Fig. 21, has been prepared for the rapid solution of these problems by mere inspection, good for any number of teeth, and for all the different styles, materials, and stresses of gears given by the above formulas, but for occasional preliminary determination, the formulas are sufficient, as their solution is simple.

It will, of course, be understood that the teeth considered in these formulas are those of the usual standard dimensions, in which the height of tooth equals seven-tenths of the pitch. What are known as "short tooth gears," in which the height of tooth equals half the pitch, are undoubtedly stronger, but their smaller working face is supposed to cause more rapid wear, and their use is not common. Although machine-molded cast gears run quietly at low speeds, they should not be used for rim speeds much over 1,000 feet per minute. For speeds of from 1,000 to 3,000 feet per minute cut gears should be substituted.

For a quick approximation of the diameter of the pinion shaft in inches the following formula may be used:

$$\text{Shaft diameter} = P' + 1.$$

The weight of pinions and gears varies with different makers. Pinions of from 12 to 30 teeth are usually made slightly wider than gears, even if they are not shrouded; and the smaller sizes have solid webs in place of arms. It is found that a formula of the form

$$\text{Weight in pounds} = \text{coefficient} \times P'^2AN,$$

will usually fit the weights.

For many tables, the coefficients of the following values will serve:

$$\text{Weight of pinion} = 0.35\ P'^2AN,$$
$$\text{weight of gear} = 0.45\ P'^2AN,$$

or where $A = 3\ P'$,

$$\text{Weight of pinion} = P'^3N,$$
$$\text{weight of gear} = 1.35\ P'^3N$$

or when diameter and P' are known, as $N = \frac{\pi D}{P'}$,

$$\text{Weight of pinion} = 3.1\ DP'^2,$$
$$\text{weight of gear} = 4.2\ DP'^2.$$

The price of gears varies largely with different manufacturers. The price of cast tooth spur gears can be usually expressed by a formula of the following form:

$$\text{Price} = (\text{coeff.} \times P'N) + (\text{coeff.} \times P').$$

Cut tooth gears usually cost about 20 per cent more than cast tooth; and cast steel gears from 50 to 75 per cent more than cast iron gears of the same size.

No. 39. Fans, Ventilation and Heating.—Fans; Heaters; Shop Heating.

No. 40. Fly-Wheels.—Their Purpose, Calculation and Design.

No. 41. Jigs and Fixtures, Part I.—Principles of Jig and Fixture Design; Drill and Boring Jig Bushings; Locating Points; Clamping Devices.

No. 42. Jigs and Fixtures, Part II.—Open and Closed Drill Jigs.

No. 43. Jigs and Fixtures, Part III.—Boring and Milling Fixtures.

No. 44. Machine Blacksmithing.—Systems, Tools and Machines used.

No. 45. Drop Forging.—Lay-out of Plant; Methods of Drop Forging; Dies.

No. 46. Hardening and Tempering.—Hardening Plants; Treating High-Speed Steel; Hardening Gages.

No. 47. Electric Overhead Cranes.—Design and Calculation.

No. 48. Files and Filing.—Types of Files; Using and Making Files.

No. 49. Girders for Electric Overhead Cranes.

No. 50. Principles and Practice of Assembling Machine Tools, Part I.

No. 51. Principles and Practice of Assembling Machine Tools, Part II.

No. 52. Advanced Shop Arithmetic for the Machinist.

No. 53. Use of Logarithms and Logarithmic Tables.

No. 54. Solution of Triangles, Part I.—Methods, Rules and Examples.

No. 55. Solution of Triangles, Part II.—Tables of Natural Functions.

No. 56. Ball Bearings.—Principles of Design and Construction.

No. 57. Metal Spinning.—Machines, Tools and Methods Used.

No. 58. Helical and Elliptic Springs.—Calculation and Design.

No. 59. Machines, Tools and Methods of Automobile Manufacture.

No. 60. Construction and Manufacture of Automobiles.

No. 61. Blacksmith Shop Practice.—Model Blacksmith Shop; Welding; Forging of Hooks and Chains; Miscellaneous Appliances and Methods.

No. 62. Hardness and Durability Testing of Metals.

No. 63. Heat Treatment of Steel.—Hardening, Tempering, Case-Hardening.

No. 64. Gage Making and Lapping.

No. 65. Formulas and Constants for Gas Engine Design.

No. 66. Heating and Ventilation of Shops and Offices.

No. 67. Boilers.

No. 68. Boiler Furnaces and Chimneys.

No. 69. Feed Water Appliances.

No. 70. Steam Engines.

No. 71 Steam Turbines.

No. 72 Pumps, Condensers, Steam and Water Piping.

No. 73. Principles and Applications of Electricity, Part I.—Static Electricity; Electrical Measurements; Batteries.

No. 74. Principles and Applications of Electricity, Part II.—Magnetism; Electro-Magnetism; Electro-Plating.

No. 75. Principles and Applications of Electricity, Part III.—Dynamos; Motors; Electric Railways.

No. 76. Principles and Applications of Electricity, Part IV.—Electric Lighting.

No. 77. Principles and Applications of Electricity, Part V.—Telegraph and Telephone.

No. 78. Principles and Applications of Electricity, Part VI.—Transmission of Power.

No. 79. Locomotive Building, Part I.—Main and Side Rods.

No. 80. Locomotive Building, Part II.—Wheels; Axles; Driving Boxes.

No. 81. Locomotive Building, Part III.—Cylinders and Frames.

No. 82. Locomotive Building, Part IV.—Valve Motion.

No. 83. Locomotive Building, Part V.—Boiler Shop Practice.

No. 84. Locomotive Building, Part VI.—Erecting.

No. 85. Mechanical Drawing, Part I.—Instruments; Materials; Geometrical Problems.

No. 86. Mechanical Drawing, Part II.—Projection.

No. 87. Mechanical Drawing, Part III.—Machine Details.

No. 88. Mechanical Drawing, Part IV.—Machine Details.

No. 89. The Theory of Shrinkage and Forced Fits.

No. 90. Railway Repair Shop Practice.

ADDITIONAL TITLES WILL BE ANNOUNCED IN MACHINERY FROM TIME TO TIME

MACHINERY'S DATA SHEET SERIES

MACHINERY'S Data Sheet Books include the well-known series of Data Sheets originated by MACHINERY, and issued monthly as supplements to the publication; of these Data Sheets over 500 have been published, and 6,000,000 copies sold. Revised and greatly amplified, they are now presented in book form, kindred subjects being grouped together. The purchaser may secure either the books on those subjects in which he is specially interested, or, if he pleases, the whole set at one time. The price of each book is 25 cents (one shilling) delivered anywhere in the world.

TITLES AND CONTENTS ON BACK COVER

CONTENTS OF DATA SHEET BOOKS

No. 1. Screw Threads.—United States, Whitworth, Sharp V- and British Association Standard Threads; Briggs Pipe Thread; Oil Well Casing Gages; Fire Hose Connections; Acme Thread; Worm Threads; Metric Threads; Machine, Wood, and Lag Screw Threads; Carriage Bolt Threads, etc.

No. 2. Screws, Bolts and Nuts.—Fillister-head, Square-head, Headless, Collar-head and Hexagon-head Screws; Standard and Special Nuts; T-nuts, T-bolts and Washers; Thumb Screws and Nuts; A. L. A. M. Standard Screws and Nuts; Machine Screw Heads; Wood Screws; Tap Drills; Lock Nuts; Eye-bolts, etc.

No. 3. Taps and Dies.—Hand, Machine, Tapper and Machine Screw Taps; Taper Die Taps; Sellers Hobs; Screw Machine Taps; Straight and Taper Boiler Taps; Stay-bolt, Washout, and Patch-bolt Taps; Pipe Taps and Hobs; Solid Square, Round Adjustable and Spring Screw Threading Dies.

No. 4. Reamers, Sockets, Drills and Milling Cutters.—Hand Reamers; Shell Reamers and Arbors; Pipe Reamers; Taper Pins and Reamers; Brown & Sharpe, Morse and Jarno Taper Sockets and Reamers; Drills; Wire Gages; Milling Cutters; Setting Angles for Milling Teeth in End Mills and Angular Cutters, etc.

No. 5. Spur Gearing.—Diametral and Circular Pitch; Dimensions of Spur Gears; Tables of Pitch Diameters; Odontograph Tables; Rolling Mill Gearing; Strength of Spur Gears; Horsepower Transmitted by Cast-iron and Rawhide Pinions; Design of Spur Gears; Weight of Cast-iron Gears; Epicyclic Gearing.

No. 6. Bevel, Spiral and Worm Gearing.—Rules and Formulas for Bevel Gears; Strength of Bevel Gears; Design of Bevel Gears; Rules and Formulas for Spiral Gearing; Tables Facilitating Calculations; Diagram for Cutters for Spiral Gears; Rules and Formulas for Worm Gearing, etc.

No. 7. Shafting, Keys and Keyways.—Horsepower of Shafting; Diagrams and Tables for the Strength of Shafting; Forcing, Driving, Shrinking and Running Fits; Woodruff Keys; United States Navy Standard Keys; Gib Keys; Milling Keyways; Duplex Keys.

No. 8. Bearings, Couplings, Clutches, Crane Chain and Hooks.—Pillow Blocks; Babbitted Bearings; Ball and Roller Bearings; Clamp Couplings; Plate Couplings; Flange Couplings; Tooth Clutches; Crab Couplings; Cone Clutches; Universal Joints; Crane Chain; Chain Friction; Crane Hooks; Drum Scores.

No. 9. Springs, Slides and Machine Details.—Formulas and Tables for Spring Calculations; Machine Slides; Machine Handles and Levers; Collars; Hand Wheels; Pins and Cotters; Turn-buckles, etc.

No. 10. Motor Drive, Speeds and Feeds, Change Gearing, and Boring Bars.—Power required for Machine Tools; Cutting Speeds and Feeds for Carbon and High-speed Steel; Screw Machine Speeds and Feeds; Heat Treatment of High-speed Steel Tools; Taper Turning; Change Gearing for the Lathe; Boring Bars and Tools, etc.

No. 11. Milling Machine Indexing, Clamping Devices and Planer Jacks.—Tables for Milling Machine Indexing; Change Gears for Milling Spirals; Angles for setting Indexing Head when Milling Clutches; Jig Clamping Devices; Straps and Clamps; Planer Jacks.

No. 12. Pipe and Pipe Fittings.—Pipe Threads and Gages; Cast-iron Fittings; Bronze Fittings; Pipe Flanges; Pipe Bends; Pipe Clamps and Hangers; Dimensions of Pipe for Various Services, etc.

No. 13. Boilers and Chimneys.—Flue Spacing and Bracing for Boilers; Strength of Boiler Joints; Riveting; Boiler Setting; Chimneys.

No. 14. Locomotive and Railway Data.—Locomotive Boilers; Bearing Pressures for Locomotive Journals; Locomotive Classifications; Rail Sections; Frogs, Switches and Cross-overs; Tires; Tractive Force; Inertia of Trains; Brake Levers; Brake Rods, etc.

No. 15. Steam and Gas Engines.—Saturated Steam; Steam Pipe Sizes; Steam Engine Design; Volume of Cylinders; Stuffing Boxes; Setting Corliss Engine Valve Gears; Condenser and Air Pump Data; Horsepower of Gasoline Engines; Automobile Engine Crankshafts, etc.

No. 16. Mathematical Tables.—Squares of Mixed Numbers; Functions of Fractions; Circumference and Diameters of Circles; Tables for Spacing off Circles; Solution of Triangles; Formulas for Solving Regular Polygons; Geometrical Progression, etc.

No. 17. Mechanics and Strength of Materials.—Work; Energy; Centrifugal Force; Center of Gravity; Motion; Friction; Pendulum; Falling Bodies; Strength of Materials; Strength of Flat Plates; Ratio of Outside and Inside Radii of Thick Cylinders, etc.

No. 18. Beam Formulas and Structural Design.—Beam Formulas; Sectional Moduli of Structural Shapes; Beam Charts; Net Areas of Structural Angles; Rivet Spacing; Splices for Channels and I-beams; Stresses in Roof Trusses, etc.

No. 19. Belt, Rope and Chain Drives.—Dimensions of Pulleys; Weights of Pulleys; Horsepower of Belting; Belt Velocity; Angular Belt Drives; Horsepower transmitted by Ropes; Sheaves for Rope Drive; Bending Stresses in Wire Ropes; Sprockets for Link Chains; Formulas and Tables for Various Classes of Driving Chain.

No. 20. Wiring Diagrams, Heating and Ventilation, and Miscellaneous Tables.—Typical Motor Wiring Diagrams; Resistance of Round Copper Wire; Rubber Covered Cables; Current Densities for Various Contacts and Materials; Centrifugal Fan and Blower Capacities; Hot Water Main Capacities; Miscellaneous Tables: Decimal Equivalents, Metric Conversion Tables, Weights and Specific Gravity of Metals, Weights of Fillets, Drafting-room Conventions, etc.

MACHINERY, the monthly mechanical journal, originator of the Reference and Data Sheet Series, is published in four editions—the *Shop Edition*, $1.00 a year; the *Engineering Edition*, $2.00 a year; the *Railway Edition*, $2.00 a year, and the *Foreign Edition*, $3.00 a year.

The Industrial Press, Publishers of MACHINERY,
9-55 Lafayette Street, New York City, U. S. A.

MACHINERY'S
REFERENCE SERIES

EACH PAMPHLET IS ONE UNIT IN A COMPLETE LIBRARY OF MACHINE DESIGN AND SHOP PRACTICE REVISED AND REPUBLISHED FROM MACHINERY

No. 16

MACHINE TOOL DRIVES

SECOND EDITION—REVISED AND ENLARGED

CONTENTS

Data for the Design of Driving and Feed Mechanisms, by FORREST E. CARDULLO - - - - - - 3

Speeds and Feeds of Machine Tools, by C C. STUTZ - 11

Machine Tool Drives, by JOHN EDGAR - - - - - 20

Geared or Single Pulley Drives, by J. C. STEEN and WM. F. GROENE - - - - - - - - 28

Drives for High-Speed Cutting Tools, by C. E. COOLIDGE 35

Copyright 1910, The Industrial Press, Publishers of MACHINERY
49-55 Lafayette Street, New York City

MACHINERY'S REFERENCE SERIES

This treatise is one unit in a comprehensive Series of Reference books, originated by MACHINERY, and including an indefinite number of compact units, each covering one subject thoroughly. The whole series comprises a complete working library of mechanical literature in which the Mechanical Engineer, the Master Mechanic, the Designer, the Machinist and Tool-maker will find the special information he wishes to secure, selected, carefully revised and condensed for him. The books are sold singly or in complete sets, as may be desired. The price of each book is 25 cents, and it is possible to secure them on even more favorable terms under special offers issued by MACHINERY'S circulation department and sent to any one on request.

The success of the Reference Series was instantaneous and copies are now widely distributed in machine shops and metal working plants everywhere.

CONTENTS OF REFERENCE BOOKS

No. 1. WORM GEARING.—Calculating Dimensions for Worm Gearing; Hobs for Worm-Gears; Location of Pitch Circle; Self-Locking Worm Gearing; etc.

No. 2. DRAFTING-ROOM PRACTICE.—Drafting-Room System; Tracing, Lettering and Mounting; Card Index Systems.

No. 3. DRILL JIGS.—Elementary Principles of Drill Jigs; Drilling Jig Plates; Examples of Drill Jigs; Jig Bushings; Using Jigs to Best Advantage.

No. 4. MILLING FIXTURES.—Elementary Principles of Milling Fixtures; Collection of Examples of Milling Fixture Design, from practice.

No. 5. FIRST PRINCIPLES OF THEORETICAL MECHANICS.

No. 6. PUNCH AND DIE WORK.—Principles of Punch and Die Work; Suggestions for the Making and Use of Dies; Examples of Die and Punch Design.

No. 7. LATHE AND PLANER TOOLS.—Cutting Tools for Planer and Lathe; Boring Tools; Shape of Standard Shop Tools; Forming Tools.

No. 8. WORKING DRAWINGS AND DRAFTING-ROOM KINKS.

No. 9. DESIGNING AND CUTTING CAMS.—Drafting of Cams; Cam Curves; Cam Design and Cam Cutting; Suggestions in Cam Making.

No. 10. EXAMPLES OF MACHINE SHOP PRACTICE.—Cutting Bevel Gears with Rotary Cutters; Making a Worm-Gear; Spindle Construction.

No. 11. BEARINGS.—Design of Bearings; Causes of Hot Bearings; Alloys for Bearings; Ball Bearings; Friction of Roller Bearings.

No. 12. MATHEMATICS OF MACHINE DESIGN.—Compiled with special reference to shafting and efficiency of hoisting machinery.

No. 13. BLANKING DIES.—Making Blanking Dies; Blanking and Piercing Dies; Construction of Split Dies; Novel Ideas in Die Making.

No. 14. DETAILS OF MACHINE TOOL DESIGN.—Cone Pulleys and Belts; Strength of Countershafts; Tumbler Gear Design; Faults of Iron Castings.

No. 15. SPUR GEARING.—First Principles of Gearing; Formulas for Spur Gearing; Design and Calculation of Gear Wheels; Strength of Gear Teeth.

No. 16. MACHINE TOOL DRIVES.—Speeds and Feeds of Machine Tools; Geared or Single Pulley Drives; Drives for High Speed Cutting Tools.

No. 17. STRENGTH OF CYLINDERS.—Formulas, Charts, and Diagrams for Thick Hollow Cylinders; Design of Thick Cylinders; Cast Iron Cylinders.

No. 18. SHOP ARITHMETIC FOR THE MACHINIST.—Tapers; Change Gears; Cutting Speeds; Feeds; Indexing; Gearing for Cutting Spirals; Angles.

No. 19. USE OF FORMULAS IN MECHANICS.—Mathematical Signs and Formulas; Strength of Materials; Graphical Methods; Levers; Center of Gravity.

No. 20. SPIRAL GEARING.—Calculating Spiral Gears; Rules, Formulas, and Diagrams for Designing Spiral Gears; Efficiency of Spiral Gearing, etc.

See inside back cover for additional titles

MACHINERY'S REFERENCE SERIES

EACH NUMBER IS ONE UNIT IN A COMPLETE LIBRARY OF MACHINE DESIGN AND SHOP PRACTICE REVISED AND REPUBLISHED FROM MACHINERY

NUMBER 16

MACHINE TOOL DRIVES

SECOND EDITION—REVISED AND ENLARGED

CONTENTS

Data for the Design of Driving and Feed Mechanisms, by FORREST E. CARDULLO - - - - - - - - 3

Speeds and Feeds of Machine Tools, by C. C. STUTZ - 11

Machine Tool Drives, by JOHN EDGAR - - - - - 20

Geared or Single Pulley Drives, by J. C. STEEN and WM. F. GROENE - - - - - - - - - - 28

Drives for High Speed Cutting Tools, by C. E. COOLIDGE 35

Copyright, 1910, The Industrial Press, Publishers of MACHINERY
49-55 Lafayette Street, New York City

CHAPTER I

DATA FOR THE DESIGN OF DRIVING AND FEED MECHANISMS

There is probably no branch of machine design in which greater changes have taken place in recent years than that of the design of machine tools. The greater part of these changes are without doubt due to the work of Mr. Fred W. Taylor, the discoverer of high-speed steel, who has more thoroughly investigated the capabilities and possible performances of metal cutting tools than any other man. The writer had occasion some time ago to study carefully Mr. Taylor's paper "On the Art of Cutting Metals." His study of this paper, together with his own experience in machine tool design and operation, has brought him to certain conclusions in regard to some points in machine tool design which will be of interest and value not only to those who may themselves design and build such tools, but also to everyone who has to purchase or use them.

Ratio of Speed Changes

The first point to which the writer would call attention is the necessity of a sufficient number of speed changes. Those who have read Mr. Taylor's paper will remember that he shows that there is a definite relation between the cutting speed and the length of time which a tool will last without regrinding. Should the machine be run at too high a speed, the tool will last but a short time before it will have to be reground. Should it be run at too low a speed, less work, of course, will be done, although the tool will last a comparatively long time. Somewhere there is a golden mean at which the cost of machining plus the cost of tool dressing is a minimum, and theoretically our machine should always be run at that speed. Of course, in handling materials of varying grades of hardness, and, in the case of lathes and boring mills, of varying diameters, this would necessitate a very great number of speed changes. If the number of speed changes be limited, it is apparent that the machine cannot always be working at the point of maximum efficiency. The speed of cutting which gives the maximum efficiency is shown in Mr. Taylor's paper to be that speed which will destroy the tool in from 50 minutes in the case of a $\frac{5}{8}$-inch $\times$ 1-inch roughing tool, to 1 hour and 50 minutes in the case of a 2-inch $\times$ 3-inch roughing tool. These times are of course only approximations and will vary somewhat with the cost of steel and labor and the value of the machine in which the tool is used. If the machine be slowed down from this proper speed, the cost of machining will slowly increase, but if the machine be speeded up above this proper speed, the cost of machining will increase very rapidly. In his paper Mr. Taylor gives a diagram wherein it is shown that if the machine be slowed down so that the duration of the cut is increased from 50 minutes to about 4

hours and 40 minutes, the machine is then working at about 90 per cent of its former efficiency. If the machine be speeded up until the duration of the cut is decreased to about 15 minutes, the machine will again be working at about 90 per cent efficiency. This range of speed is shown by Mr. Taylor's equations to be in the ratio of $\sqrt[4]{15}$ to $\sqrt[4]{280}$ or of 1 to 1.45. Consequently, if we have a machine having several speeds with the constant ratio of 1.45 between the successive speeds, we know that such a machine may always be made to operate within 90 per cent of its maximum efficiency, and that on the average it will operate at more than 95 per cent of its best efficiency.

The following table, which is derived in the manner indicated from the diagram given in Mr. Taylor's paper, shows the speed ratios corresponding to the given average and minimum efficiencies of working.

Ratio	Average Efficiency	Minimum Efficiency
1.1	99.6 per cent	99.2 per cent
1.2	98.7 per cent	97.3 per cent
1.3	97.3 per cent	94.5 per cent
1.4	95.6 per cent	91.2 per cent
1.5	93.5 per cent	87.0 per cent
1.6	90.6 per cent	81.2 per cent
1.7	86.5 per cent	73.0 per cent

From the table it will appear that even in the case of very costly machines it is of no particular advantage to reduce the ratio between successive speeds unduly. For instance, by doubling the number of speeds and reducing the speed ratio from 1.2 to 1.1, we will increase the average efficiency of the machine only about 1 per cent. It is very doubtful if the accidental variations in shop conditions would not be so great that the gain in practical work would be nothing, since the workman or the speed boss, as the case might be, would be unable to decide which of two or three speeds would be the best. The writer is therefore of the opinion that there is absolutely no practical advantage in reducing the speed ratio below 1.2 and that in the case of machines of ordinary type and cost, a ratio of 1.3 is as small as is advisable. In the case of a speed ratio of 1.3, the machine can always be made to operate at such a speed that the efficiency of working will be above 94.5 per cent and in the average case the efficiency will exceed 97.5 per cent. The 2.5 per cent loss of efficiency so caused is inappreciable as compared with other sources of loss, and it is exceedingly doubtful if the added cost of additional speed changes would not more than compensate for the possible 1 or 2 per cent of gain, entirely aside from the question of whether the extra speed changes would permit this theoretical gain to be realized.

The writer is also of the opinion that a speed ratio of more than 1.5 in the case of expensive machinery operated by highly skilled help, or of 1.7 in the case of cheap machinery operated by comparatively unskilled help is inadvisable. It will be seen that with a speed ratio of 1.5 the average efficiency of working is, in general, about 93.5 per cent, making the loss of efficiency in the average case about 6.5, or say 6 per cent. It will be seen that when the rent of the tool plus the wages of a mechanic amounts to $4 a day or upward, this 6 per cent of loss means

a money loss of $0.25 or more per day, or upward of $75 a year. Of course, an increase in the number of speed changes and reduction of ratio would not save all this loss, but assuming that it would save half of it, and further, that the machine is operating only half the time, it is evident that we can afford to spend $150 or $200 for the extra speed changes necessary in order to bring the speed ratio down to 1.3. In the case of a ratio of 1.7, the loss is 12 or 13 per cent instead of only 6 per cent, and these figures apply with greatly added force.

We are thus compelled to the conclusion that the useful range of the speed ratio in machine tool work is very narrow, ranging from 1.3 to 1.5 in ordinary cases and that a range of from 1.2 to 1.7 includes the very extremes of rational practice.

Need of Speed Changes Being Easily Made

A second point in connection with the matter of the speed changes of machine tools which is of great importance is that these changes should be easily and quickly made so that the operator will have every incentive to use the proper speed. This is a matter of less importance in the case of planers than in the case of lathes and boring mills, since a planer requires a change of speed only when the character of the material which is being cut is changed, while the lathe requires a change when any great change is made in the diameter of the work operated upon.

In this respect a motor-driven tool may have a distinct advantage over a belt-driven tool. The controller furnishes a ready means for varying the speed while the shifting of a belt from pulley to pulley is not always readily accomplished, and most machinists would much rather take two cuts of differing diameters on the back-gear than shift the belt from the small to the large pulley and throw out the back-gear in order to obtain the faster speed from the open belt. This is particularly the case when the cuts are of small duration, so that the shifting would be frequent.

It will be evident to the thoughtful mechanic that it is of great advantage to have the speed-changing mechanism so constructed that the change may be made without stopping the machine. In the case of large machines it will be of great advantage to be able to effect the speed change from the operating station, which for instance in the case of a long lathe will be the carriage. To the writer's mind the particular advantage of these refinements which he suggests, and which will be found embodied in many of the designs of our best tool makers, lies not in the fact that the time required to make the necessary speed changes is shortened, but in the fact that the workman finds it just as easy to run his machine at the proper speed as at an improper one.

Ratio of Feed Changes

A matter of even greater importance than a proper series of easily made speed changes is a proper series of easily made feed changes. A change of speed does not mean in general a correspondingly great change in the efficiency of operation of a machine tool, but a change in feed does. Mr. Taylor points out in his paper that in general the best

results in quantity of metal removed per hour are obtained when the cross-section of the chip is a maximum, even though this entails a comparatively low speed. Therefore it is of importance that the machinist be able to take the heaviest cut which the nature of his work and the power and stiffness of his machine will permit. Just as the best results in the matter of cutting speeds are obtained when the successive speeds run in geometric ratio, so the best results in the matter of feed adjustment are obtained when the successive feeds run in geometric ratio, unless the number of obtainable feeds is so great that the entire range is closely covered. For instance, a lathe equipped with the following feeds, 0.05, 0.10, 0.15, 0.20, 0.25, is distinctly inferior in productive capacity to a lathe having the same number of feeds arranged geometrically as follows, 0.05, 0.074, 0.111, 0.166, 0.25, wherein each feed is about 50 per cent greater than the preceding one.

In general the best work is obtained from a machine tool when the depth of cut is made such that the total depth of metal to be cut away is removed with one or two cuts. Such being the case, the depth of cut is practically fixed and not within the control of the operator, leaving the feed and speed as the variables which he must adjust. It is important therefore that the operator be able to take a cut as heavy as the nature of the work or of the tool will permit. Mr. Taylor's paper shows that the speed of cutting is approximately inversely proportional to the square root of the feed. It needs therefore only a very elementary knowledge of mathematics to see that if the feed must be reduced to say 80 per cent of its maximum value, the output of the lathe will be only about 90 per cent of its maximum value. Or in general, if the feed be reduced from its maximum possible value by any given per cent, then the output of the machine will be reduced from its corresponding maximum value by about one-half of that per cent. We may by means of this principle compute the ratio between successive feeds which will give us any required average value for the efficiency of operation of the machine. The values so found are tabulated below:

Efficiency	Ratio	Efficiency	Ratio
98 per cent	1.08	90 per cent	1.66
96 " "	1.18	88 " "	1.92
94 " "	1.32	86 " "	2.27
92 " "	1.46		

An inspection of the table shows that when the ratio between successive feeds is about 1.1, the average efficiency of operation of the machine may be practically perfect, and that with any considerable increase of this ratio the efficiency drops off. It is the opinion of the writer that the ratio between successive feeds should always be less than 1.3 and that, more especially in the case of expensive machinery, a value of 1.2 or less is preferable.

Importance of Convenience of Feed-changing Mechanism

It has already been pointed out that the speed-changing mechanism should be of such a character that the speed changes may be easily and quickly made. In the same way it is of even greater importance that the feed changes may be easily and quickly made. In most small

lathes which are now on the market, quick-change gears are fitted to the screw-cutting mechanism, which are equally available as quick-change gears for the feed mechanism. In most shops small lathes are not used very much of the time for screw-cutting, and in fact nine lathes out of ten are never used for that purpose, but a quick-change gear mechanism is of much greater importance when used for the purpose of obtaining feed changes than when used for the purpose of obtaining thread changes. In the average case the operator will not have to touch the thread-cutting gear once a week, while it may be advisable to change the feed every five minutes. In the case of large lathes it is advisable to have the feed changes, not in the head-stock but in the apron, in order that the workman may be encouraged to use a proper feed whenever possible.

Unlike lathes, planers are generally equipped with ratchet feeds. The successive values of the feed changes in the case of a ratchet feed will necessarily run in an arithmetic and not a geometric series, the successive feeds differing by some constant decimal of an inch. So long as the amount by which the successive feeds differ is small, and the range of feeds given by the mechanism is large, a ratchet feed is perfectly satisfactory. Many boring mills are fitted with a feed mechanism driven by a friction wheel of the type generally known as a brush wheel, the driving mechanism consisting of a steel disk of 12 to 16 inches in diameter geared to the table, and against the face of which a much smaller wheel edged with leather is pressed. It is obvious that if the steel disk rotate at a constant speed, the speed of the driven wheel and consequently the amount of the feed may be varied by adjusting its position. When it presses the disk near its center it will revolve slowly. When it presses the disk near its edge, it will revolve at a comparatively high speed. This feed mechanism has the advantage that it gives an infinite number of feed changes over a wide range, but has the disadvantage that it is not positive in its action, and lacks sufficient power for certain kinds of work. On the whole, the best feed driving mechanism is a nest of gears so arranged that any feed within the entire range may be had by the simple shifting of one or two levers.

Strength of the Feed Mechanism

In that part of his paper discussing the force required to feed the tool of a lathe or boring mill, Mr. Taylor makes the assertion that the feed mechanism should have sufficient strength to "deliver at the nose of the tool a feeding pressure equal to the entire driving pressure of the chip upon the lip surface of the tool." This would lead to the designing of a lathe or boring mill having feed gearing of equal strength with its driving mechanism. In the case of planers and other machines in which the tool is moved at a time when it is not cutting, these statements do not apply. It is not generally the custom among machine tool builders to design machines having such strong feed works as Mr. Taylor's ideas call for, and the writer sees no reason why such strength is necessary. The amount of force required to traverse a tool in a lathe is not proportional to the width of feed,

and while it may be true for fine feeds that in the case of dull tools the traversing pressure may be equal to, or greater than the downward pressure upon the tool, this is not necessarily the case with heavy feeds. As the width of the feed is increased, the downward pressure will increase almost in proportion, while the traversing pressure will increase comparatively little, so that when the lathe is taking the maximum cut which the driving mechanism is capable of handling, the pressure required to feed the tool into the work, even though it be very dull, is much less than the downward pressure. It is the writer's opinion that a feed mechanism designed to have one-half the strength of the driving mechanism is ample for large tools, while for small tools in which of course the feed will be finer, a strength of two-thirds of the driving mechanism might be preferable.

"Breaking Piece" of Feed Mechanism

The feed mechanism should be provided with a breaking piece whose strength will be less than that of the rest of the mechanism and which may be cheaply and easily replaced. The office of this piece is to prevent the breaking of the more costly and less easily replaced parts of the mechanism, exactly as the fuse in an electric circuit prevents the destruction of any other part of the circuit. Two forms of breaking piece sometimes used for such service are, first, a soft steel pin, driven through a shaft and hub of harder steel, which shears off when the strain becomes too great; and second, a short section of shaft turned down at its center, which twists off under similar circumstances. A breaking piece must be of such a character that it will not spoil any of the rest of the mechanism when it breaks, and should not cost more than a few cents, and should be as easily removed and replaced as a common change gear.

It must not be imagined that a feed gearing designed to have one-half the strength of the driving gear will not be strong enough to meet Mr. Taylor's requirements in all ordinary cases. If a tool be designed to take a maximum cut of $\frac{3}{8}$ inch by $\frac{1}{8}$ inch, it is not likely that much of its work will be done with such a heavy cut. If both driving and feed gearing be designed with a proper factor of safety, there is ample margin of strength for all usual conditions, while a breaking piece is the best provision against extraordinary stresses.

Pressure on Lip Surface of Tool and Its Relation to Design

The pressure upon the lip surface of the tool is required in order that the designer may know, first, the strength required of the driving mechanism and frame of a machine; second, the power required by the machine; and third, the strength required for the feed mechanism. The two materials upon which the vast majority of machine tools are called to operate are cast iron and steel. Taking first the case of cast iron, we find from Mr. Taylor's paper that the pressure upon the lip surface of the tool varies from 75,000 to 150,000 pounds per square inch of chip section in the case of soft iron, and from 120,000 to 225,000 pounds in the case of hard cast iron. The finer the feed, the greater the pressure per square inch upon the lip surface of the tool.

Thus with an ⅛-inch depth of cut and 1/64-inch feed, the pressure on the tool is about 289 pounds, or 146,000 pounds per square inch. With the same depth of cut and ⅛-inch feed, the pressure on the tool is 1,358 pounds, or only about 86,900 pounds per square inch of chip section. Both these figures are given for soft cast iron. Mr. Taylor gives formulas for the total pressure of the work upon the lip surface of the tool, but the following table will be found more convenient for obtaining the required values, although the figures given are of course only approximations:

	Pressure per Square Inch	
Feed, Inches	Soft Cast Iron	Hard Cast Iron
1/64	140,000	220,000
1/32	120,000	190,000
1/16	100,000	160,000
1/8	85,000	135,000

In the case of soft and medium steels we find that the pressure in pounds per square inch of chip section runs from 250,000 to 300,000 pounds, being greater in the case of the finer feeds. In the case of special steels which combine high tensile strength and great elongation, it is probable that these figures would be very much exceeded. The amount of the feed and depth of cut will depend on the kind of work which is to be machined. In the case of small castings, 3/16 inch is an ample allowance for depth of cut and ⅛ inch would be much more usual. In the case of very large and heavy castings the depth of cut required might run up to ½ inch, and in the case of large "meaty" forgings, it may be even greater than this at some places. In those cases where the area of chip section is not fixed by the work, as in the case of stocky forgings and castings, the greatest width of feed is limited by the strength of the machine itself, which in turn is limited only by the length of the purchaser's purse. Presumably it would be possible to build a boring mill or a planer capable of taking a cut an inch deep with an inch feed if anyone wished to pay for such a machine, but whether it could do the average line of work as economically as a machine taking a ⅜-inch cut with ⅛-inch width of feed is another matter. While there is no settled rule either for the maximum depth of cut or width of feed for any particular type of machine, the matter of the size of tool used is generally definitely known. In the case of forged roughing tools the maximum chip section will be from 2 to 3 per cent of the area of the section of the tool shank. For instance, the heaviest cut which a tool forged from 1-inch by 1½-inch stock will be called upon to take will be ¼ inch by ⅛ inch, or perhaps a trifle greater. In the case of tools ground from bar stock and held in tool-holders, the section of the chip may run up as high as 5 per cent of the section of the bar. Knowing the size of tool for which the tool-holders are designed, we may proportion our machine accordingly.

A matter which has great effect not only upon the quantity of work which a machine is capable of doing, but also upon its accuracy and length of useful life, is its stiffness. While it is true that if we know the maximum pressure upon the lip-surface of the tool, we may design

a machine for strength and have one which will probably never break in service, yet it is often better to add many times the quantity of metal which mere strength would call for, in order to have a machine with the maximum of stiffness. Stiffness in machine tool design has to do with two points, the first being the actual deflection of the metal of which it is composed under the stresses which come upon it in operation; the second is the play which invariably exists at all joints, more especially the slides of compound rests in lathes, and of saddles in boring mills and planers. The best remedy for actual deflection of metal is to use plenty of it, and to distribute it in such a way as to realize from it its maximum strength. The writer has found that an excellent method of designing such machine parts as require great stiffness is by comparison with existing tools whose operation is satisfactory. Let us assume for instance that we are to design the cross-rail of a planer. The rail is to be 8 feet between the housings and the overhang of the tool below the center of the rail is to be 30 inches. The cut is to be, let us say, ½ inch deep by ⅛ inch feed. Let us assume further that we have at our disposal a 4-foot planer, the overhang of whose cutting tool is 15 inches, and which will take in a satisfactory manner a cut ¼ inch deep by 1/16 inch feed. We now have sufficient data to satisfactorily design a cross-rail for the larger planer. If we assume that the deflection of the tool produced in the two cases should be identical in order to have the work equally satisfactory, we will find that the pressure upon the tool of the larger planer will be 4 times that upon the tool of the smaller; that both the bending and the twisting moments set up in the cross-rail will be 8 times as large, and that the distance over which these moments will operate to produce a deflection will be twice as great. Therefore, if the two rails had the same cross-section, the deflection of the tool of the larger machine would be 16 times that of the tool of the smaller. The stiffness of two bodies of similar section varies directly as the 4th power of the ratio of their homologous dimensions. Therefore, if we make the section of the rail of the larger machine similar in form to that of the rail of the smaller machine, each dimension twice as great as the corresponding dimension of the smaller rail, it will be 16 times as stiff and the deflections in the two cases will be identical. In case the rail of the smaller machine were not of the best form to resist the stresses which it must sustain, the form might be changed, the designer using his best judgment as to what effect such change might have upon its stiffness.

CHAPTER II

SPEEDS AND FEEDS OF MACHINE TOOLS

In designing machine tools of any type, be it a lathe, milling machine, grinding machine, etc., aside from the correct proportioning of the parts, and the introduction of convenient means for rapidly producing certain motions, a very important factor is to be taken into consideration, that is, the correct proportioning of the speeds and feeds of these various machines. Before entering into an explanation of the method which is to be set forth later, we will explain some of the preliminary considerations which are to be met by the designer. Supposing a problem of designing a lathe be presented; it follows, at once, that certain conditions limiting the problem are also given. These limiting conditions may be considered as the size and material of the piece to be turned.

We consider the material of a piece to be machined as a limiting condition for the reason that a lathe turning wood must run at a different speed from one turning brass, and the latter at a different speed from a lathe turning iron or steel. Then, again, in turning a small piece, our machine will revolve faster than in turning a large piece. The speeds required for machining advantageously the different materials, according to the different diameters, may be termed "surface speeds." Roughly speaking, the surface speeds for the different materials vary within comparatively narrow limits. We may assume the following speeds for the following materials (using carbon steel cutting tools):

Cast iron	30 to 45 feet per minute.
Steel	20 to 25 feet per minute.
Wrought iron	30 feet per minute.
Brass	40 to 60 feet per minute.

For cast iron as found in Europe, we may assume 20 to 35 feet per minute; this lower figure is due to the fact that European cast iron is considerably harder.

The surface speeds above given are, of course, approximate, and it is left to the judgment of the designer to modify them according to the special given conditions. These surface speeds for cutting metal are the same whether the piece to be cut revolves, or the cutting tool revolves around the piece, or, as in a planer, the cutting tool moves in a straight line along or over the work. Therefore, the surface speeds in a general sense hold good for all types of machines, such as milling machines, lathes, gear-cutting machines, drilling machines, planers, etc.

Suppose that a problem is given requiring that a lathe be designed to turn both cast iron and steel, and to turn pieces from one-half inch

to twelve inches in diameter. Simple calculation will show us that a piece of work one-half inch in diameter, and having a surface speed of 30 feet per minute, as would be suitable for cast iron, must make 230 revolutions per minute. A piece of steel, which is 12 inches in diameter, with a surface speed of 20 feet per minute, must make 6.5 revolutions per minute approximately. It follows that the lathe to conform to the conditions imposed, must have speeds of the spindle varying from 6.5 to 230 revolutions per minute. These are the maximum and minimum speeds required. To meet the varying conditions of intermediate diameters, the lathe will be constructed to give a certain number of speeds. The lathe, probably, will be back-geared and have a four-, five-, or six-step cone.

In a correct design these various speeds must have a fixed relation to each other. For reasons explained in Chapter III these speeds must form a geometrical progression, and the problem briefly stated is this: "The speeds (the slowest and fastest being given) are to be proportioned in such a manner that they will form a geometrical progression." The ratio of the gearing is also to be found. A geometrical progression in a series of numbers is a progressive increase or decrease in each successive number by the same multiplier or divisor at each step, as 3, 9, 27, 81, etc.

To treat the problem algebraically let there be

n = number of required speeds,

a = slowest speed,

b = fastest speed,

d = number of speeds of cone,

$n-1$ = number of stops or intervals in the progression of required speeds,

f = ratio of geometrical progression, or factor wherewith to multiply any speed to get the next higher.

Algebraically expressed, the various speeds, therefore, form the following series:

$$a,\ af,\ af^2,\ af^3\ \ldots\ldots af^{n-2},\ af^{n-1}$$

The last, or fastest speed, is expressed by af^{n-1} and also by the letter b. Therefore, $af^{n-1} = b$, or

$$f^{n-1} = \frac{b}{a}, \text{ and } f = \sqrt[n-1]{\frac{b}{a}}$$

Suppose we have, as an example, a lathe with a four-speed cone, triple geared. In this case we would have four speeds for the cone, four more speeds for the cone with back-gears, and still four more speeds with triple-gears; therefore, in all, twelve speeds. Assuming a as the slowest speed in this case, b would be expressed by af^{11}, and the series, therefore, beginning with the fastest speed, would run

$$af^{11},\ af^{10},\ af^9 \ldots\ldots af^2,\ af,\ a.$$

The four fastest speeds, which are obtainable by means of the cone alone would be

$$af^{11},\ af^{10},\ af^9,\ af^8.$$

Dividing each of the four members of this series by f^4, we obtain the following series:

$$af^7,\ af^6,\ af^5,\ af^4,$$

as the speeds of cone with back-gears.

Again dividing the series of speeds of the cone af^{11} to af^8 by $f^4 \times f^4 = f^8$ we obtain the series

$$af^3,\ af^2,\ af,\ a,$$

as the series of speeds of cone with triple-gears.

We have, therefore, in this way accounted for all the twelve speeds that the combination given is capable of, and it is now very evident that the ratio of the back-gears must be f^4, or, in general, f^d, if $d =$ number of speeds of cone, and the ratio of triple-gears f^8 (or, in general, f^{2d}).

By carrying this example still further, we would find that the ratio of quadruple-gears would be f^{3d}.

We can summarize the preceding statements, and put them in a more convenient form for calculation by writing:

$$\begin{aligned} lg \text{ of ratio of back-gears} &= d\ lg\ f \\ lg \text{ of ratio of triple-gears} &= 2d\ lg\ f \\ lg \text{ of ratio of quadruple-gears} &= 3d\ lg\ f \end{aligned}$$

The problem, with this consideration, therefore, is solved. An example will be worked out below.

We will now consider a complication of the problem which very often occurs. Should the overhead work of the drive in consideration have two speeds, then we will obtain double the number of available speeds for the machine, and this number of speeds may be expressed by $2n$, in order to conform to the nomenclature used above. This modified problem is treated just as the problem above, and the series of speeds is found as in the first case, and we have as a factor

$$f = \sqrt[2n-1]{\frac{b}{a}}$$

We must consider now that one-half the obtained speeds are due to the first overhead speed, the other half to the second.

In writing the odd numbers of speeds found in one line, and the even numbers of speeds in another, we obtain the following two series:

$$a,\ af^2,\ af^4 \ldots\ldots\ldots\ldots af^{2n-4},\ af^{2n-2}$$
$$af,\ af^3,\ af^5 \ldots\ldots\ldots\ldots af^{2n-3},\ af^{2n-1}$$

In examining these two series, we will find that they are both geometrical progressions, and furthermore, that both progressions have the same factor, and calling this factor, f_1, we have

$$f_1 = f^2,$$

and the ratio of the two counter-shaft speeds is equal to f, because to obtain any speed in the second series we multiply the corresponding speed in the first series by f. The two series in our case are due to the two overhead speeds. We need to concern ourselves with only one (either one of the two series), and without going again through the

explanation for the first case, it is very evident that we will arrive at the following conclusions:

lg of ratio of back-gears $= d\ lg\ f_1$
lg of ratio of triple-gears $= 2d\ lg\ f_1$
lg of ratio of quadruple-gears $= 3d\ lg\ f_1$

Having in this way obtained all the desired speeds and the ratios of the gears, it is a simple matter for the designer to determine the actual diameters of the various steps for the cone and for the gears. To do so he has at his disposal various methods,* which need not be explained here. The main thing for him to have is a geometrical progression of speeds, as a foundation for his design.

Problem 1. A Triple-Geared Lathe

Suppose the following example to be given: Proportion the speeds and find the gear ratio of a six-step cone, triple-geared lathe; slowest speed, 0.75 revolution per minute; fastest, 117 revolutions per minute.

This example of a six-step cone, triple-geared, will give us eighteen available speeds. Using our previous notation, $n = 18$, $n-1 = 17$, $a = 0.75$, and $b = 117$; therefore

$$f = \sqrt[17]{\frac{117}{0.75}} = \sqrt[17]{156}$$

The slowest speed being given, we multiply it by the factor f to obtain the next higher, and this one in turn is again multiplied by the

COMPLETE CALCULATION OF CONE PULLEY SPEEDS

$lg\ 0.75 = 0.8750613 - 1$		$1.0361270 = lg$	10.867
$lg\ f = 0.1290073$		0.1290073	
$0.0040686 = lg$	1.009	$1.1651343 = lg$	14.626
0.1290073		0.1290073	
$0.1330759 = lg$	1.358	$1.2941416 = lg$	19.685
0.1290073		0.1290073	
$0.2620832 = lg$	1.828	$1.4231489 = lg$	26.494
0.1290073		0.1290073	
$0.3910905 = lg$	2.461	$1.5521562 = lg$	35.658
0.1290073		0.1290073	
$0.5200978 = lg$	3.312	$1.6811635 = lg$	47.991
0.1290073		0.1290073	
$0.6491051 = lg$	4.457	$1.8101708 = lg$	64.591
0.1290073		0.1290073	
$0.7781124 = lg$	5.999	$1.9391781 = lg$	86.932
0.1290073		0.1290073	
$0.9071197 = lg$	8.074	$2.0681854 = lg$	117.000
0.1290073			

* See MACHINERY'S Reference Series, No. 14, Details of Machine Tool Design, Chapters I and II.

factor f, and so on, until we have reached the highest speed b. The 17th root of 156 is easiest found by the use of logarithms.

We have

$$lg\ 156 = 2.1931246$$
$$lg\ f = 1/17\ lg\ 156 = 0.1290073$$
$$f = 1.3459$$

Now we follow out the multiplication by finding the logarithm of 0.75, the slowest speed, adding to it the logarithm of the factor f to obtain the logarithm of the next higher speed; and adding the logarithm of factor f to the sum of these two logarithms will give us the logarithm of the next higher speed. By looking up the numbers for these logarithms, we find these speeds to be 1.009 and 1.358. The complete calculation is given in tabulated form on the previous page.

Now, for example, the number of speeds of cone d equals 6, and according to our formula, the logarithm of the ratio of the back-gears $= d\ lg\ f$, and the logarithm of the ratio of the triple-gears $= 2d\ lg\ f$. Expressed in figures we have:

$lg\ f = 0.1290073 \times 6 = 0.7740438$, and the ratio of the back-gears $=$ 5.9435. Further, $12\ lg\ f = 1.5480876$, and the ratio of the triple-gears $=$ 35.325.

Problem 2.—Lathe with two Counter-shaft Speeds

Suppose the following example is given: Proportion the speeds and find the gear-ratio of a four-step cone, back-geared, two speeds to counter-shaft; slowest speed, 25 revolutions per minute; fastest speed, 500 revolutions per minute.

In this case $n = 8$; $2n = 16$; and, consequently,

$$f = \sqrt[15]{\frac{500}{25}} = \sqrt[15]{20} = 1.221$$

In following out the calculation as shown in Problem 1, we obtain the following series of sixteen speeds:

1) 25.00	5) 55.58	9) 123.54	13) 274.64
2) 30.53	6) 67.86	10) 150.85	14) 335.35
3) 37.28	7) 82.86	11) 184.20	15) 409.48
4) 45.51	8) 101.18	12) 224.92	16) 500.00

Of these sixteen speeds, eight are due to one over-head work speed; the other eight are due to the second over-head work speed. We write the odd and even speeds in two series, as below:

First Series.	Second Series.
1) 25.00	2) 30.53
3) 37.28	4) 45.51
5) 55.58	6) 67.86
7) 82.86	8) 101.18
9) 123.54	10) 150.85
11) 184.20	12) 224.92
13) 274.64	14) 335.35
15) 409.48	16) 500.00

In order to find the ratio of the back-gears, we can use either one of these two series, and as explained above, $f_1 = f^2$. We therefore

have $1.221^3 = f_1$, and further $4 \times lg\, f_1 =$ ratio of back-gears. From this the ratio of the back-gears = 4.9418. We also know that the ratio of counter-shaft speeds $= f = 1.221$.

This method of geometrically proportioning speeds in machine drives, which has been explained at length, will be found, after one or two applications, a rather simple one. But its usefulness is not limited to the proportioning of speeds in machine drives, as it can also be applied to the proportioning of feeds.

Feeds for Machine Tools

Before proceeding to apply this method to geometrically proportioning feeds in machines, a few remarks on feeds may not be out of place. By feeds are understood the advances of table, carriage, or work, in relation to the revolutions of the machine spindle. Feeds may be expressed in inches per minute or inches per revolution of spindle. In a table given below, feeds for different machines are given in inches for one revolution per spindle, where not otherwise specified. This table is supposed to represent modern practice, with carbon steel cutting tools, but the figures given, of course, represent general experience, and special cases, no doubt, will often modify them considerably.

	Feed, Inches.
Plain milling machine	0.005 – 0.2
Large plain milling machine	0.010 – 0.3
Universal milling machine	0.003 – 0.2
Large universal milling machine	0.003 – 0.25
Automatic gear cutter, small	0.005 – 0.1
Drills (spindle-feed)	0.004 – 0.02
Planing machine (traverse feed)	0.005 – 0.7
Slotting machine (feed of work)	0.005 – 0.2
Drilling long holes in spindles (per revolution of drill)	0.003 – 0.01
Lathes, feed for roughing	56 – 80 turns per inch
Lathes, feed for finishing	112 turns per inch.

Universal Grinding Machine

Surface speed of emery-wheel, 4,000–7,000 feet per minute. Traverse of platen or wheel, 2 to 32 inches per minute; the fast feeds are for cast iron. Surface speed of work on centers, 130–160 feet per minute. For internal work use the following surface speeds of emery-wheel (highest nominal speeds), with no allowance for slip of belt; lowest nominal speed about 40 per cent less. Any speed between should be obtainable.

Diameter of Wheel.	Feet per Minute.
1 5/8	3,600
1	2,750
3/4	2,100
7/16	1,450
1/4	1,100

Surface Grinding Machine

Surface speed of emery wheel, 4,000–7,000 feet per minute. Table

speed per minute, 8–15 feet. Cross feed to one traverse of platen, 0.005–0.2 inch. Cross feed to one revolution of hand-wheel, 0.25 inch.

Problem 3 —The Feeds of a Milling Machine

The problem of proportioning the feeds of different machines varies in each case, although always embodying similar principles. It is, therefore, proposed to take a typical case and apply the method to the problem presented, and in this way explain the advantages of the particular method referred to.

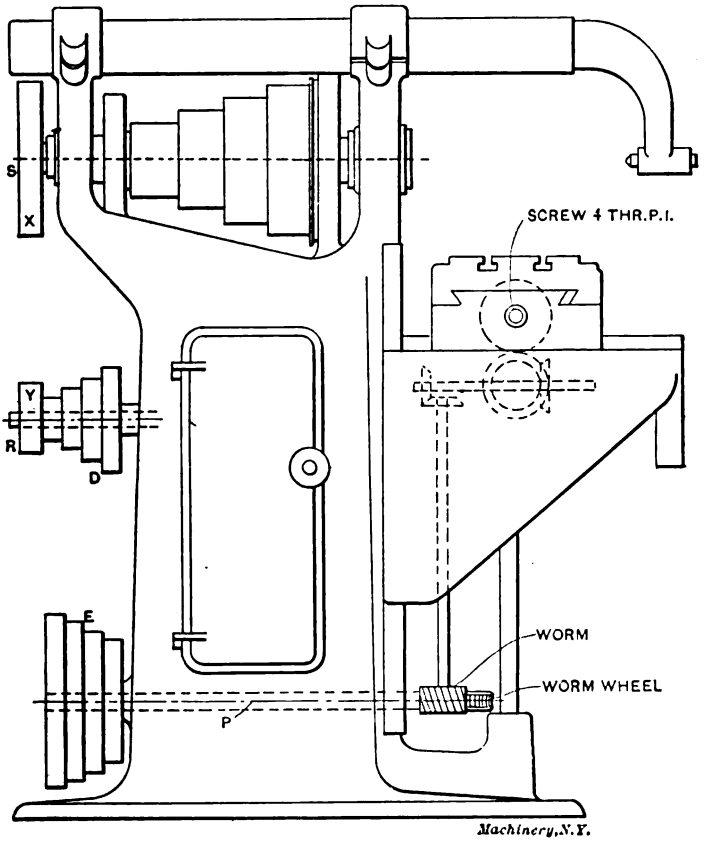

Fig. 1. General View of Milling Machine, having Cone Pulley Feed

In Fig. 1 is given an outline drawing of a milling machine. The type selected is not one of the latest designs, because it is easier to comprehend the principles involved in a type such as shown. The application of the principles, however, is, with few modifications, the same for the most modern gear-feed types, as for the one shown. The problem in this case will be the following: Given the fastest and slowest feeds per one revolution of main spindle, proportion the

required feeds in such a manner that they will form a geometrical progression. Cones D and E as well as pulleys X and Y can be transposed.

The main data with which we have to concern ourselves about this machine may be assumed to be as follows: lead screw, four threads per inch, single; advance of screw per one revolution, 0.25 inch; largest feed wanted, 0.25 (equal to one revolution of screw); smallest feed wanted, 0.005 inch (equal to 1/50 revolution of screw); for one revolution of screw, shaft P (see Fig. 1) makes thirty revolutions; for 1/50 revolution of screw, shaft P makes $30 \div 50 = 0.6$ revolutions. The ratio of revolutions between the screw and shaft P is therefore in our example as 1 to 30; that is, given the revolutions of shaft P we divide this number by 30 to obtain the revolutions of the screw. The revolutions of the screw multiplied by the lead L (in this case equal to 0.25) gives the advance for given revolutions of P. Let

V = ratio of train from P to screw,

L = lead of screw,

R_p = revolutions of shaft P per one revolution of spindle,

p = advance or feed of screw per one revolution of spindle, expressed in inches.

We have

$$p = \frac{R_p L}{V} \tag{1}$$

$$R_p = \frac{Vp}{L} \tag{2}$$

If now n equals the numbers of feeds wanted, we obtain for f, the factor wherewith to multiply each feed to get the next higher feed,

$$f = \sqrt[n-1]{\frac{b}{a}}$$

in which b is the fastest, and a, the slowest speed of shaft P. That is, in the present case

$$R_p \text{ maximum} = 30 = b.$$
$$R_p \text{ minimum} = 0.6 = a.$$

The problem in our case stated that cones D and E, as well as pulleys X and Y could be transposed. The cones have four steps, and transposing them gives us eight speeds. Pulleys X and Y being also transposable gives, therefore, $2 \times 8 = 16$ speeds. The numerical value for f is therefore in our case,

$$f = \sqrt[15]{\frac{30}{0.6}} = \sqrt[15]{50}$$

The maximum and the minimum speeds of shaft P per one revolution of spindle of machine, as well as the number of steps required, being known, we now readily obtain a geometrical series with the minimum speed of shaft P as a beginning, and the maximum speed as the

last step. The numerical values that follow are found exactly in the same way as the values for the different speeds of a lathe drive as already shown. The required speeds of shaft P are then:

1) 0.6	5) 1.70	9) 4.83	13) 13.72
2) 0.78	6) 2.21	10) 6.27	14) 17.81
3) 1.01	7) 2.87	11) 8.14	15) 23.11
4) 1.31	8) 3.72	12) 10.57	16) 30.00

The value of p, in our case, becomes, according to formula (1),

$$p = \frac{R_p \times 0.25}{80} = 0.0083\ R_p$$

in which R_p, the number of revolutions of shaft P, has the different values found above. By substituting these values of R_p, we obtain the following feeds, which are the feeds of the lead screw per one turn of machine spindle.

1) $0.6 \times 0.0083 = 0.005$ inches	9) $4.83 \times 0.0083 = 0.0400$ inches
2) $0.78 \times 0.0083 = 0.0065$ "	10) $6.27 \times 0.0083 = 0.0520$ "
3) $1.01 \times 0.0083 = 0.0084$ "	11) $8.14 \times 0.0083 = 0.0677$ "
4) $1.31 \times 0.0083 = 0.0109$ "	12) $10.57 \times 0.0083 = 0.0877$ "
5) $1.70 \times 0.0083 = 0.0141$ "	13) $13.72 \times 0.0083 = 0.1138$ "
6) $2.21 \times 0.0083 = 0.0183$ "	14) $17.81 \times 0.0083 = 0.1513$ "
7) $2.87 \times 0.0083 = 0.0238$ "	15) $23.11 \times 0.0083 = 0.1918$ "
8) $3.72 \times 0.0083 = 0.0308$ "	16) $30.00 \times 0.0083 = 0.2500$ "

We now write the speeds found for shaft P in two columns, one containing the odd numbers and the other the even numbers, in this manner:

1) 0.6	2) 0.78
3) 1.01	4) 1.31
5) 1.70	6) 2.21
7) 2.87	8) 3.72
9) 4.83	10) 6.27
11) 8.14	12) 10.57
13) 13.72	14) 17.81
15) 23.11	16) 30.00

The series of speeds in each column forms a geometrical progression, and we assume that the speeds in the first column are due to the position of the pulleys X and Y as shown in the outline drawing, Fig. 1, and that the speeds in the second column are due to a reversed position of X and Y. That is to say, the speeds in the second column above are obtained after having changed Y to X and X to Y. As these speeds in the second column are equal to the speeds in the first column multiplied by factor f, it follows that the two speeds of shaft R are to each other as 1 is to f. Assuming these two speeds to be m and n, the proportion exists,

$$m : n = 1 : f \qquad (3)$$

Supposing x and y to represent the diameters of the respective pulleys; it will be evident that

$$1 \times x = my\text{; or, } m = \frac{x}{y} \tag{4}$$

$$1 \times y = nx\text{; or, } n = \frac{y}{x} \tag{5}$$

Substituting the values (4) and (5) in formula (3) we have

$$\frac{x}{y} : \frac{y}{x} = 1 : f, \text{ or } f = \frac{y}{x} : \frac{x}{y} = \frac{y}{x} \times \frac{y}{x} = \frac{y^2}{x^2} \tag{6}$$

The value of f being known, we have in formula (6) an expression of the relation which the diameters of the pulleys X and Y must bear to each other. Putting this formula into a more handy shape we find from $f = \frac{y^2}{x^2}$

$$y^2 = fx^2, \text{ or } y = \sqrt{fx^2} \tag{7}$$

$$x^2 = \frac{y^2}{f}, \text{ or } x = \sqrt{\frac{y^2}{f}} \tag{8}$$

In using either (7) or (8), and assuming one diameter, the other one is easily found. The remaining part of the problem, that is, to find the diameters of the cone, is now a simple matter.

CHAPTER III

MACHINE TOOL DRIVES

The present chapter contains considerable matter already treated in Chapter II. In order to make the present chapter a complete whole by itself, it has, however, been considered advisable to repeat such statements and formulas as are necessary to fully comprehend the somewhat different treatment of the subject presented in this chapter.

One of the first problems encountered in the design of a new machine tool is that of laying out the drive. The importance of a properly proportioned drive is coming more and more to be recognized. The use of high-speed steels, and the extra high pressure under which modern manufacturing is carried on, precludes the use of any but the most modern and efficient drive.

The drive selected may be one of the following different kinds, depending on the conditions surrounding the case in hand: We may make the drive to consist of cone pulleys only; we may use cone pulleys in conjunction with one or more sets of gears; or we may make our drive to consist of gears only, depending on one pulley, which runs at a constant speed, for our power. If the conditions will allow, we may use an electric motor, either independently or in connection with suitable gearing.

After having selected the form which our drive is to take and the amount of power to be delivered, which we will assume has been decided upon, we may turn our energies to the problem of arranging the successive speeds at which our machine is to be driven. As most machines requiring the kind of drive with which we are here concerned have spindles which either revolve the work, or a cutting tool that has to be worked at certain predetermined speeds dependent on the peripheral speed of the work or cutter, a natural question to be asked at this point is, "What is the law governing the progression of these speeds?"

As an example to show what relation these speeds must bear to one another, let us suppose that we have five pieces of work to turn in a lathe, their diameters being 1, 2, 5, 10, and 20 inches respectively. In order that the surface speed may be the same in each case we must revolve the one-inch piece twice as fast as the two-inch piece, because the circumference varies directly as the diameter, so that a two-inch piece would be twice as great in circumference as the one-inch piece. The five-inch piece would revolve only one-fifth as fast as the one-inch piece; the 10-inch piece 1/10th, the 20-inch piece 1/20th. We have seen that the addition of one inch to the diameter of the one-inch piece reduces the speed 100 per cent. If we add one inch to the two-inch piece we reduce the speed 50 per cent, and similarly one inch added to the 5-, 10-, and 20-inch pieces reduces the speed 20, 10, and 5 per cent respectively. From this we see that the speed must vary inversely with the diameter for any given surface speed. It also shows that the speeds differ by small increments at the slow speeds, the increment gradually increasing as the speed increases. Speeds laid out in accordance with the rules of geometrical progression fulfill the requirements of the above conditions.

If we multiply a number by a multiplier, then multiply the product by the same multiplier, and continue the operation a definite number of times, we have in the products obtained a series of numbers which are said to be in geometrical progression. Thus 1, 2, 4, 8, 16, 32, 64 are in geometrical progression, since each number is equal to the one preceding, multiplied by 2, which is called the ratio. The above may be expressed algebraically by the following formula:

$$b = a\, r^{n-1}$$

where b is a term or number which is the nth term from a which i the first term in the series. The term r is the ratio or constant multiplier.

If we are given the maximum and minimum of a range of speeds we may find the ratio by the following formula, when the number of speeds is given:

$$r = \sqrt[n-1]{\frac{b}{a}}$$

As most cases in which we would use this formula would require the use of logarithms, we will express the above as

$$\text{Log } r = \frac{\text{Log } b - \text{Log } a}{n - 1}$$

Let us suppose we are designing a drive which is to give a range of 18 spindle speeds, from 10 to 223 revolutions per minute. Now the first thing to be done is to find the ratio r, which, by the above formula is found to be 1.20, and by continued multiplication, the series is found to be 10, 12, 14.4, 17.25, 20.7, 24.85, 29.8, 35.8, 43, 51.6, 62, 74.4, 89.4, 107, 129, 155, 186, 223.

Our drive can be made to consist of one of the many forms just mentioned. As the cone and back-gear is the most common form, and fills the conditions well, we will choose that style drive for the case in hand. We may have a cone of six steps, double back-gears and one counter-shaft speed, such as would be used in lathe designs, or we may use a cone with three steps, double back-gears and two counter-shaft speeds as is used in milling machines. This latter plan will be followed in our present case.

There are two methods of arranging the counter-shaft speeds. First, by shifting the machine belt over the entire range of the cone before changing the counter-shaft speed; and second, by changing the counter-shaft speed after each shift of the machine belt. The method used will have a very important effect on the design of the cone. The cone resulting from the former practice will be quite "flat," with very small difference in the diameter of the steps, while the use of the second method will produce a cone which will have a steep incline of diameters. Some favor one, some the other. The controlling point in favor of the first method is the appearance of the cone obtained.

We will first design our drive with the conditions of the first method in view; that is, we will arrange our counter-shaft speeds so that the full range of the cone is covered before changing the counter-shaft speed, thus obtaining the flat cone. Tabulating the speeds in respect to the way they are obtained, we have

Cone.	Open Belt.		Small Ratio Back Gears in.		Large Ratio Back Gears in.	
	Fast Counter.	Slow Counter.	Fast Counter.	Slow Counter.	Fast Counter.	Slow Counter.
Step 1.....	223	129.	74.4	43.	24.85	14.4
Step 2.....	186	107.	62	35.8	20 7	12.
Step 3.....	155	89.4	51.6	29.8	17.25	10.
	1	2	3	4	5	6

From the above table we may obtain the ratio of the two sets of back-gears, the counter-shaft speeds, and the speeds off each step of the cone.

The ratio of the large ratio back-gears is found by dividing one term in column 2 by a corresponding term in column 6. The ratio of the small ratio gears is found by dividing a term in column 2 by a corre-

sponding term in column 4. The ratio of counter-shaft speeds is obtained by dividing a term in column 5 by a corresponding term in column 6; and the ratio of speeds off each step of the cone, by dividing the term corresponding to step 1 in any column by a term corresponding to step 2 or 3, as desired, from the same column. The results for the present case are as follows:

Ratio of large ratio gears is	8.94 to 1
Ratio of small ratio gears is	2.98 to 1
Ratio of counter-shaft speeds is	1.725 to 1
Ratio of speeds off step 1 to those off step 2	1.2 to 1
Ratio of speeds off step 1 to those off step 3	1.44 to 1

The matter of designing the cone seems to cause trouble for a good many, if we are to judge by the results obtained, which are various in

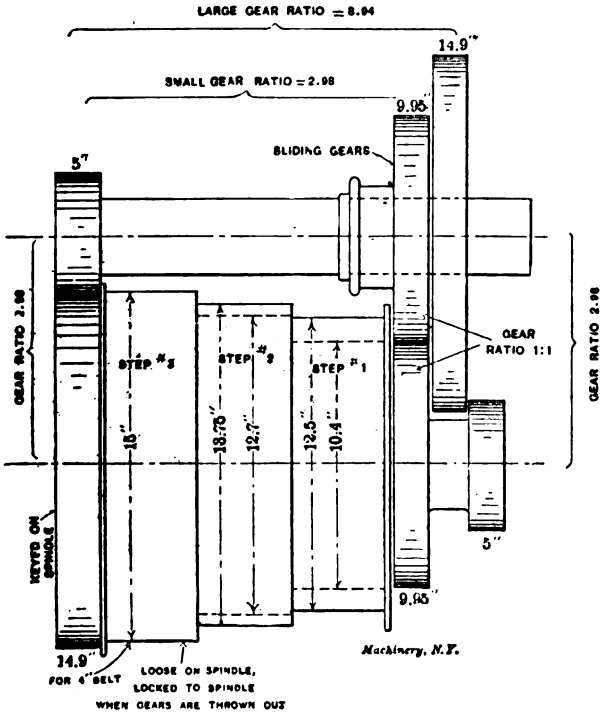

Fig. 2. Two Methods of Laying out the Cone for a Double Back-Geared Spindle

any collection of machine tools, even in those of modern design. It is possible to design a cone so as to obtain speeds in strict accordance with the geometrical series. In most cases the counter-shaft cone and the one on the machine are made from the same pattern, so that it is necessary that the diameters be the same for both cones, and since the belt is shifted from one step to another, its length must be kept

constant. This is accomplished by having the sum of diameters of corresponding steps equal.

We will take as the large diameter of the cone, 15 inches. The ratio of the speeds off step 1 and step 3 is 1.44 to 1. This ratio also equals $\frac{D \times D}{d \times d}$ where D is the diameter of largest step and d is the diameter of smallest step. Making them opposite terms in an equation we get,

$$1.44 = \frac{D \times D}{d \times d} = \frac{D^2}{d^2}$$

$$\text{or } 1.44 \times d^2 = D^2$$

$$d = \sqrt{\frac{D^2}{1.44}} = \sqrt{\frac{15 \times 15}{1.44}} = 12.5 \text{ inches, diameter of small step.}$$

The sum of the corresponding diameters on the cones is $15 + 12.5 = 27.5$.

Since this is a three-step cone the middle steps must be equal. Therefore $\frac{27.5}{2} = 13.75 =$ diameter of middle step. We found that the ratio of the speeds off first and second step is 1.2. Let us examine the above figures to see that the diameter of the middle step is correct. Thus,

$$\frac{15}{12.5} \times \frac{13.75}{13.75} = 1.2,$$

which is the correct ratio. This cone is shown in full lines in Fig. 2.

Let us now figure the diameter of the back-gears. We will assume that the smallest diameter possible for the small gears in the set is 5 inches. In order to keep the gears down as small as possible we will take this figure as the diameter of the small gear here. It is general practice, though obviously not compulsory, to make the two trains in a set of back gears equal as to ratio and diameters. When double back gears are used, the large ratio set is made with two trains of similar ratio. The small ratio set is then composed of two trains of gears whose ratios are unlike. The ratio of each train in the large ratic set, if taken as similar, is equal to the square root of the whole ratio; thus, in our drive we have $\sqrt{8.94} = 2.98$, and from this the large gear is $5 \times 2.98 = 14.9$ inches in diameter. The ratio of the small ratio set is equal to 2.98, and as one train of gears in the double back gear arrangement is common to both sets, the remaining train in the small ratio set must be of equal diameters, or $5 + 14.9 \div 2 = 9.95$ inches, as shown in Fig. 2. These figures will have to be slightly altered in order to adapt them to a standard pitch for the teeth, which part of the subject we will not deal with here.

In order to be able to compare the results of the two different methods of selecting counter-shaft speeds mentioned above, let us figure out the dimensions of a drive with counter-shaft speeds arranged according to the second method.

Proceeding in a manner similar to that pursued for the case treated above, we may tabulate the speeds as shown in the table on next page.

Cone.	Open Belt.		Small Ratio Gears in.		Large Ratio Gears in.	
	Fast Counter Speed.	Slow Counter Speed.	Fast Counter Speed.	Slow Counter Speed.	Fast Counter Speed.	Slow Counter Speed.
Step 1.....	223	186.	74.4	62.	24.85	20.7
Step 2.....	155	129.	51.6	43.	17 25	14.4
Step 3. ...	107	89.4	35.8	29.8	12.	10.
	1	2	3	4	5	6

The various ratios are:

Large ratio gears	8.94 to 1
Small ratio gears	2.98 to 1
Counter-shaft speeds	1.2 to 1
Speeds off step 1 to those off step 2	1.44 to 1
Speeds off step 1 to those off step 3	2.07 to 1

The cone dimensions are figured in the same manner as before and are 10.4 inches for step 1; 12.7 for step 2; 15 for step 3. This cone is shown dotted in Fig. 2.

We are now in a position to compare the results given by the two methods above referred to. Let us make the first comparison from the point of view of power delivered by the belt. It is well-known that the power of a belt is directly proportional to the speed at which it runs. This fact gives us an easy means of comparing our two designs. We will do this by charting the speed in feet per minute of the belt when running on the different steps of the two cones for each spindle speed. This has been done in Fig. 3, where the full lines show the curve for the first method, and the dotted lines show that for the second method. The curves at the left are those for the slow counter speeds, while at the right are seen those for the fast counter speeds. Attention is called to the great difference in power delivered between the two counter speeds in the first case, while the two sets of curves for the second method lie close together. Also, note the gain in power at speeds obtained through the slow counter in the second case. The power lost in the second case on the fast counter speeds will not be felt so much, for the same principle applies here as it does to the strength of beams, bridges, etc., *viz.*, a chain is no stronger than its weakest link.

The constant-speed pulley drive has become quite a common feature in machine tool design, and has become quite a strong favorite with many. Had our machine been provided with a drive of this design, we would have had a curve on the chart as shown by the vertical full line. The power delivered by the belt would have been constant throughout the full range of speed. This curve also applies to the motor drive, when a constant-speed motor, or a variable-speed motor of the field control type, is used, although slight modifications would have to be made for the decrease in efficiency at the extremes of the

speed range of the latter type motor, which would cause a slight bend in the curve, making it convex toward the right. Motors using the multiple-voltage system, or the obsolete armature resistance control, would show curves quite as irregular as those from the cone and back-gear drive.

Another method of comparison is by charting the pull or torque at the spindle for each spindle speed. This is done in Fig. 4, where the

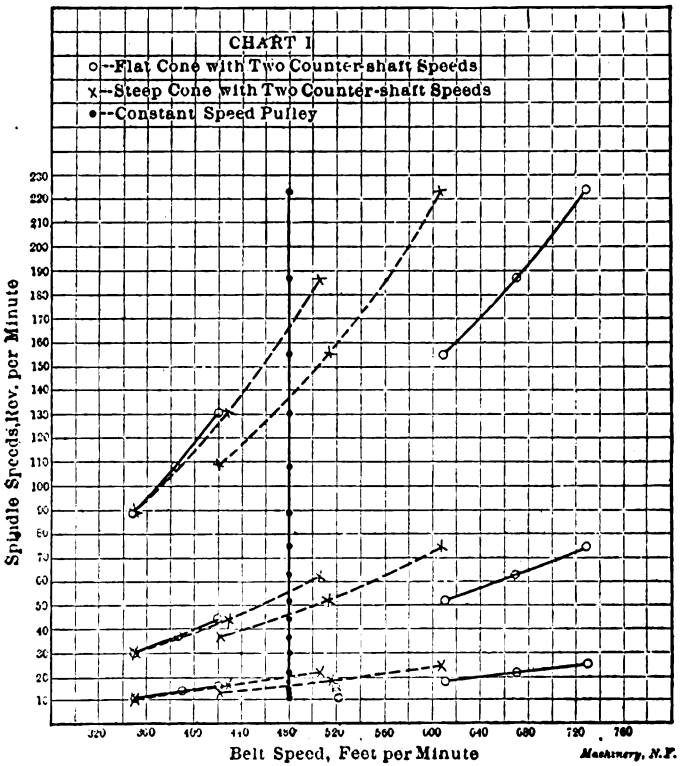

Fig. 3. Variation in Belt Speeds for Various Methods of Driving

constant speed pulley drive is shown by the full line, and is used as a comparator by which to compare the results of the two drives treated above. This figure is self-explanatory and will not need to be interpreted, but attention may be called to how much better the drive of the second case follows the ideal line than does that of the first method. This chart also shows how very close a cone and double back-gear drive comes to the constant belt-speed drive with equal power at all speeds.

Much has been said about the relative values of the two styles of cone pulleys treated above, but the charts given herewith will no doubt surprise some, and may be the means of turning them in favor

of the second method. The only good point the first method has over the second is in the appearance of the cone which has, apparently, powerful lines, which are, however, misleading, as has been shown.

Another disadvantage of the first method is the wide ratio of the

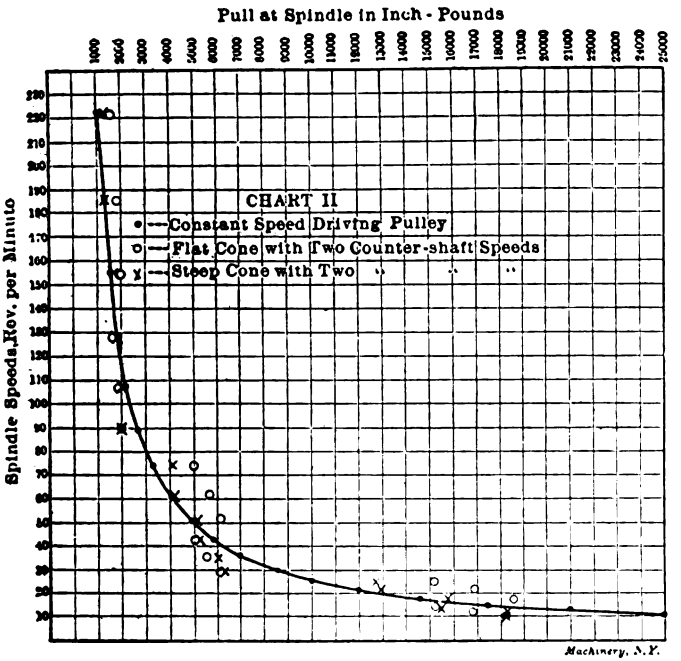
Pull at Spindle in Inch - Pounds
Spindle Speeds, Rev. per Minute
CHART II
•—Constant Speed Driving Pulley
o—Flat Cone with Two Counter-shaft Speeds
x—Steep Cone with Two " " "
Machinery, N.Y.

Fig. 4. Comparison of Torques for Various Methods of Driving

counter-shaft speeds, where, in order to get sufficient power out of the slow speed counter-shaft belt, we must have the high-speed pulley running at almost prohibitive speed, which soon tells, and as loose pulleys are a source of annoyance when their speed is moderate, trouble is sure to appear when the limit of speed is approached.

CHAPTER IV

GEARED OR SINGLE PULLEY DRIVES

Whether the geared drive, so called in order to distinguish it from the belt drive used with stepped cone pulleys, originated with some machine tool builder who was desirous of improving a given machine, or whether it was first suggested by a machine tool user in an endeavor to secure better facilities for machine operation, would be interesting to know, but difficult to determine.

Whatever the origin, the geared drive is a response to a demand for a better method of speed variation than could be obtained from stepped pulleys and a movable belt. The gradually growing demand for more powerful machine drives in the past has led to the widening of belts to the maximum point consistent with a desirable number of steps of the pulley, and the ease of belt shifting. The limiting point for belt width may be said to be reached when a belt can no longer be shifted easily by hand. For some machines, notably lathes, the maximum diameters of the driving pulleys are generally limited by conditions inherent in the machine themselves.

Back-gears were in many instances increased in ratio to make up for what could not be had by further increase of belt widths or pulley diameters, until in some cases the gap between speeds obtained directly by the belt and those obtained through the back gears became too great. When such conditions were reached, obviously, the next suggestion involved the combination of a constant speed belt of such a width and operated at such a speed as to give the requisite power, in connection with some combination of gears to be used for obtaining the desired variation in speeds. Such a combination is, in fact, a reversion of type; a going back to a system of driving formerly much used by foreign builders of machine tools. Many foreign builders objected to the use of stepped pulleys, considering their use as a deviation from, or, as being contrary to, good mechanical practice, preferring in many cases to secure speed variation by means of separate changeable gears. The objectionable feature of such a system did not suit American ideas, hence the early adoption of stepped pulleys and a movable belt as a means of quickly effecting changes even though the device was and is still considered by some designers as anomalous or paradoxical from the standpoint of pure mechanics. The substitution of the variable speed geared drive for the stepped pulley drive is therefore not due to any inherent defect in the stepped pulley so much as to its limitations as previously mentioned, and to a desire for improved facilities for quickly obtaining speed variations.

For belt-driven machines that require a variable speed, the geared drive will probably come more into use whenever its adoption will be justified from a productive or a commercial standpoint. Whatever

defects may be existent in any of its varied forms will be tolerated just as long as it meets and fulfills required conditions.

As a device of utility the geared drive has passed the point where it might by some have been considered as a fad. As a matter of fact, scarcely any new device representing a radical departure from generally accepted design and practice has ever been brought out that was not considered a fad by some one. The history of machine tool progress has shown that the fad of yesterday has frequently become the custom or necessity of to-day. Extreme conservatism will see a fad where progress views an undeveloped success. One drawback to the general adoption of any geared drive is its cost, and this will determine in most cases whether it or a belt drive shall be used; it is a matter requiring careful judgment to determine the point where the results obtained justify the added expense.

It is, however, with very few exceptions, the opinion among builders and users of machine tools that the single pulley drive will largely supersede the cone drive. Still for certain conditions it is doubtful whether we will find anything better than our old servant, the cone. The two principal advantages possessed by the single pulley drive are: First, a great increase in the power that can be delivered to the cutting tool owing to the high initial belt speed. The belt speed always being constant, the power is practically the same when running on high or low speeds. The cone acts inversely in this respect; that is, as the diameter of the work increases, for a given cutting speed, the power decreases. As a second advantage, the speed changes being made with levers, any speed can be quickly obtained.

To these might be added several other advantages. The tool can be belted direct from the lineshaft; no counter-shaft is required; floor space can be economized. It gives longer life to the driving belt; cone belts are comparatively short-lived, especially when working to their full capacity. There are, however, some disadvantages to be encountered. Any device of this nature, where all the speed changes are obtained through gears, is bound to be more or less complicated. The first cost, as mentioned, is greater. There is also more waste of power through friction losses. A geared drive requires more attention, break-downs are liable to occur, and for some classes of work it cannot furnish the smooth drive obtained with the cone. Most of these objections, however, should be offset by the increased production obtained.

To the designer the problem presented is one of obtaining an ideal variable speed device, something that mechanics have been seeking for years with but poor success, and it is doubtful whether we will get anything as good for this purpose as the variable speed motor in combination with double friction back-gears and a friction head. There are, it is true, some very creditable all-gear drives on the market in which the problem has been attacked in various ways. Still there is ample room for something better. The ideal single pulley drive should embody the following conditions.

1. There should be sufficient speed changes to divide the total range

into increments of say between 10 and 15 per cent.

2. The entire range of speeds should be obtained without stopping the machine.

3. Any speed desired should be obtained without making all the intermediate changes between the present and desired speed.

4. All the speeds should be obtained within the tool itself, and no auxiliary counter-shaft or speed variators should be used.

5. Only the gears through which the speed is actually being obtained should be engaged at one time.

6. The least possible number of shafts, gears and levers should be used.

There are few subjects in machine design which admit of so many combinations, arrangements and devices. In Figs. 5 to 10, inclusive, are shown some examples taken at random from a large collection. All of these, except Fig. 10, have the number of teeth and the speeds marked. Each has some good points, but none of them possesses all the points referred to above. The only reason for showing them is to show what a vast number of designs can be devised. One of them, that shown in Fig. 5, has been built, a number of machines have been running for over a year, and they give very good results. In Fig. 11 is shown the way the idea was worked out, as applied to a 20-inch Le Blond lathe.

The design for the headstock shown in Fig. 11 needs little explanation since the drawing shows the parts quite clearly. The friction clutch on the driving-shaft Z, which alternately engages pinions H and J, is of the familiar type used in the Le Blond double back-geared milling machine. Sliding collar D, operated by handle S, moves the double tapered key E either to the right or left as may be desired, raising either wedge W or W', which in turn expand rings X or Y within the recess in either of the two cups, F and F'. Either of two rates of speed is thus given to quill gear K and the two gears L and M keyed to it. On the spindle is a triple sliding gear which may be moved to engage P with M, O with L (as shown in the drawing) or N with K, thus giving three changes of speed when operated by lever T. The six speeds obtained by the manipulation of levers S and T are doubled by throwing in the back-gears, giving 12 speeds in all.

In comparing the merits of a series of gear drive arrangements like those shown in Figs. 5 to 10, one might apply the "point" system in determining the most suitable one. The number of points that are to be assigned to a device for perfectly fulfilling any one of the various requirements would be a matter requiring nice discrimination. So the method outlined below is to be taken as being suggestive, rather than authoritative. The first requirement is that there shall be sufficient speed changes to divide the total range into increments of between 10 and 15 per cent. The six schemes proposed do not all, unfortunately for our proposal, take in the same range of speed; considering, however, that they were each to be designed to give from 9 to 240 revolutions per minute to the spindle, as in case Fig. 5, and that a 15 per cent increment is to be allowed, the number of changes required

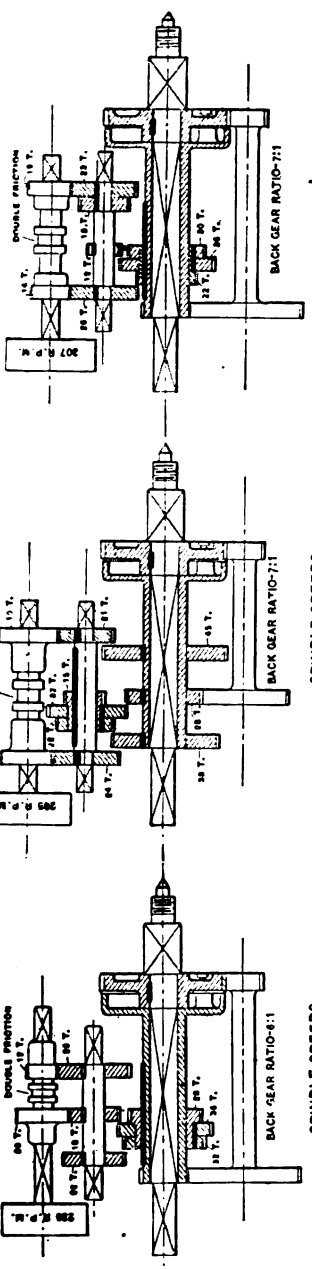

Fig. 7

Fig. 6

Fig. 5

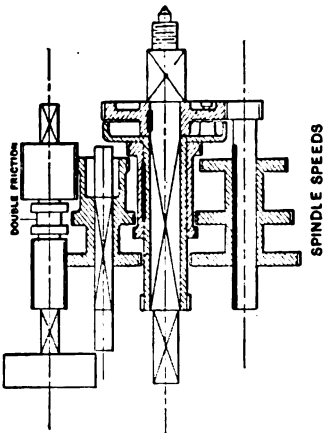

Fig. 10

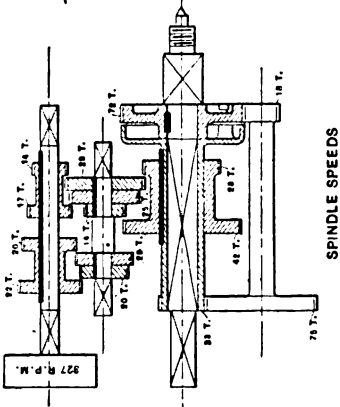

Fig. 9

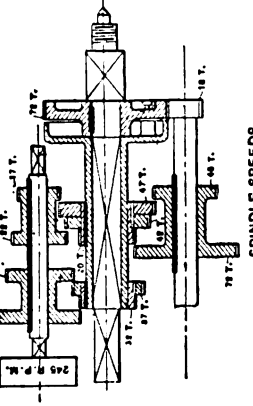

Fig. 8

can be found in the usual way by dividing the logarithm of 27— the total speed ratio required (240 ÷ 9 = 27)—by the logarithm of 1.15, which is the ratio of the geometric series desired. This gives 24 speeds, about, as needed to meet the requirements. Suppose we assign 15 points to a machine having 24 speeds. Let us set this down in its proper place in the suggested table given below. For the second qualification, that the machine shall not have to be stopped, we may assign 20 points to the ideal machine. The principle of "selective" control is assigned 10 points. The fourth consideration, requiring that all speeds shall be obtained within the tool itself is a positive requirement. If it is not met, the mechanism is out of the contest, so this question need not be considered in our table of points. Fifteen points are suggested for the requirement that the gears not in use shall not be running in mesh. The sixth requirement reads "The least possible number of shafts, gears and levers should be used." It is suggested

A SUGGESTED TABULATION OF THE MERITS OF THE VARIOUS DRIVES PROPOSED

Requirements.	Perfect Design.	No. 1	No. 2	No. 3	No. 4	No. 5	No. 6
No. of changes required compared with No. obtained..	15	8	8	8	8	10	15
Stopping of machine	20	14	14	14	14	14	14
"Selective" control.....	10	7	7	7	7	7	7
Gears not in use, must not be in mesh	15	13	13	13	15	15	13
Ratio of No. of changes to No. of movements	20	15	15	15	13	13	14
Ratio of No. of changes to No. of gears.....	20	10	9	9	9	16	18
Total	100	67	66	66	66	74	81

that this be divided, giving 20 points to the question of the ratio of the number of changes obtained to the number of movements required of the operator to obtain them, and giving the same number of points to express the ratio of the number of changes obtained to the number of gears used in obtaining them. The sum of these points added together is 100, which may be considered as representing the ideal design.

In filling out the table, since Fig. 5 has only 12 speeds or half the number required, we will give it only one-half the number of points, dealing similarly with the other designs up to No. 6, in Fig. 10, which is perfect in this respect. The machine has to be stopped to throw in back-gears. Assuming that this would not have to be done in 70 per cent of the changes, we get a uniform value of 14 for this consideration for all the cases. The feature of selective control is only about two-thirds realized in any of these designs, since the triple sliding gear used in all of them, in moving from one extreme to the other, passes through an intermediate position which is not required at the time.

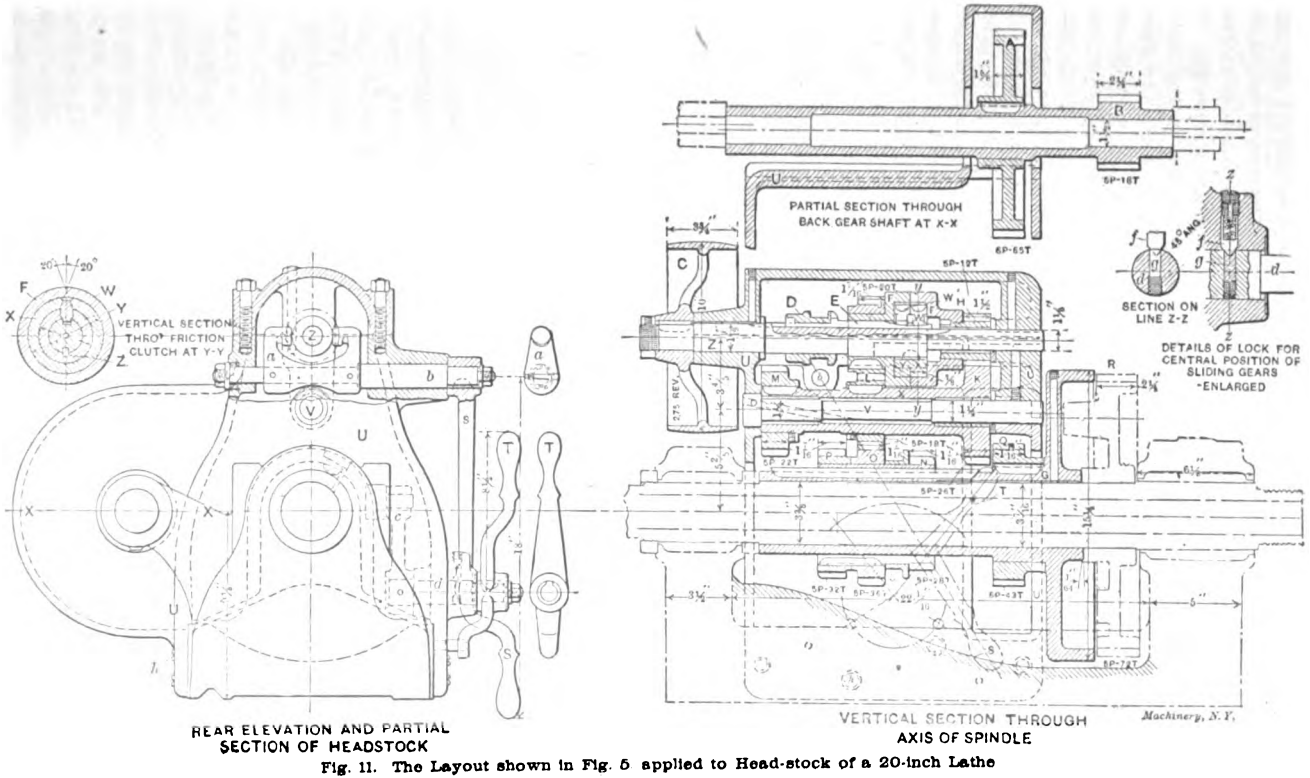
REAR ELEVATION AND PARTIAL SECTION OF HEADSTOCK
VERTICAL SECTION THRO' FRICTION CLUTCH AT Y-Y
PARTIAL SECTION THROUGH BACK GEAR SHAFT AT X-X
SECTION ON LINE Z-Z
DETAILS OF LOCK FOR CENTRAL POSITION OF SLIDING GEARS -ENLARGED
VERTICAL SECTION THROUGH AXIS OF SPINDLE
Machinery, N.Y.

Fig. 11. The Layout shown in Fig. 5 applied to Head-stock of a 20-inch Lathe

We may therefore assign the value 7 to each of these designs on this account. As to the question whether the gears not in use are running idly in mesh, all the designs are nearly perfect. The values set down in this table are suggested by this consideration. In considering the number of movements required to effect the number of changes obtained, the throwing in of the back-gear is credited with four motions, the stopping of the machine, unlocking of the spindle from the gear, the throwing in of the back-gears, and the starting of the machine. The 20 points of the ideal machine are then multiplied by each of the ratios obtained by dividing the number of changes by the number of movements, and the number of points found are set down as shown. For the last item, twice as many changes as there are gears employed is taken as a maximum which can probably not be exceeded. With this as a standard, the ratio obtained by dividing the number of changes by the number of gears used is employed to calculate the number of points. Adding the number of points obtained in each column we find that No. 1 has 67, No. 2, 3, and 4 each have 66, while No. 5 has 74, and No. 6, 81.

The comparison has been undertaken in this way with the understanding that all the arrangements are susceptible of being embodied in a practicable design. That arrangement No. 6 is practicable is strongly to be doubted. The number of teeth in the various gears used are not given, and it is far from probable that one could obtain with this arrangement a series of speeds in geometrical progression by moving in regular order the three levers required. Nos. 4 and 5, while otherwise well arranged, are open to the objection that sliding gears rotating at high rates of speed are used. This, if valid, constituted a disqualifying objection similar to that mentioned in relation to the fourth requirement. The first three cases in which a friction clutch instead of sliding gears is used on the driving shaft are therefore much to be preferred for this reason. Of these first three cases, our tabulation shows that case No. 1 has a slight advantage, and Fig. 11, in which this arrangement has been applied to a 20-inch lathe headstock, shows that the scheme is a simple and satisfactory one, so far, at least, as one can judge from a drawing.

CHAPTER V

DRIVES FOR HIGH-SPEED CUTTING TOOLS

What has been considered in the past as marvelous in the performance of high-duty cutting tools may now be compared with the proved results of air-hardening cutting tools. The metallurgist has proved to us, and a great many machine tool builders have satisfied themselves by practical experiment, that the high-speed cutting steels are at our service, but they must be properly shod if they are to be used to the best advantage. Some concerns who have experimented with the high-speed steels, and who anticipated much, have failed through lack of a proper analysis of the conditions which accompany the use of the high-speed cutting steels. It takes but a moment's reflection to convince one of the absurdity of trying to get as effective a fire from a six-inch as from a thirteen-inch gun, even though the same explosive charge is used in both.

Some viewed this unusual commotion about the high-speed cutting steels as being somewhat fanatical or a fad which would rage for a time, and then die a natural death, as many others have done. True, this was not the first high-duty cutting steel which had been advanced with enormous claims of efficiency. Mushet steel had been on the market for several years, and the great things predicted for it did not fully meet everybody's expectations. The chief reason for this was its far too limited use in a great many cases, on account of its being expensive, difficult to forge, grind, and to get a satisfactorily finished surface with it, and the failure of the machine to stand up to the chip it could take. Then again, when Mushet steel was introduced, competition among machine tool builders for increased product from their machines did not begin to compare with that which now exists with firms which more than ever are on an intensely manufacturing basis. Manufacturing plants of any considerable size using metal cutting tools are bidding nowadays for special machinery of the simplest form to augment the output of a single product, and not comparatively complicated combination tools, designed for many operations on many pieces, and which save considerable room and first cost of installation, but are of necessity inconvenient, and unsuitable for high-duty service.

The complaint which has been made by some that the new high-speed cutting steels are unfit for finishing surfaces cannot be consistently sustained. The modernly-designed manufacturing grinder has unquestionably proved to be the proper tool for finishing surfaces from the rough; and undoubtedly, and beyond peradventure, the grinder is the natural running mate for the high-duty turning lathe and planer; and it seems probable that, instead of the grinder being a rarity and a luxury in shops, as a sort of tool-room machine, it

will be as much in evidence for manufacturing purposes as the more commonly-known machine tools of the present, or more so.

The innovations of the day in machine tool evolution are in most remarkable harmony and synchronism. The electric motor, which is fast developing the independent machine drive, demands a high speed for maximum efficiency of the motor; and what do we find contemporaneously developed but the high-speed cutting steels, the practicable commercial grinder, and the comparatively high-speed non-stroke milling machine to supersede the comparatively slow multi-stroke planer? Unquestionably, there never has been in the whole history of the machine tool business such an opportunity for the enterprising capitalist, the engineer, and the designer, to invest their money, brains and skill in a type of machine tools that will be as different from the present type of machine tools as the nineteentth century lathe is from the simple and crude Egyptian lathe of tradition.

The development of the cutting or producing end of the machine appears to be further advanced than the driving end. The direct motor drive without inter-connecting belts, chains, and gears is undoubtedly the simplest, most convenient, and most effective. The motor which is most desired has not been designed, but it should be a comparatively slow-speed motor having high efficiency, whose speeds vary by infinitesimal steps between its minimum and maximum limits. fully as simple as the "commutatorless" type, and with far higher pressures than are now used. In the meantime, during the process of development, we shall have to be content with the usual compounding elements between the motor and the driving spindle; but these compounding elements, in order to keep up with the procession, will naturally undergo revolutionary changes in design.

The silent chain drive and the high-speed motor are mutual helpmates; geared variable speed devices and single-speed induction motors are well wedded, but cone pulleys are practically just beginning to receive that examination and attention which can fit them for the service of higher speeds.

In the case of a turning lathe, as would naturally be expected, we are very much limited in the range of the sizes of pieces that can be turned—if we maintain an efficient range of speeds and sufficient diameters and widths of pulleys for surface speeds of belts—unless we use an abnormally ponderous cone pulley, which is entirely out of the question. To make this point clear, it may be well to analyze a specific case. We will assume that the lathe is designed with a four-stepped cone and with "front-gears" (the speed ratios of front-gears are figured the same as back-gears, but their thrust at the front box is opposite in direction to that of the back-gears and to the lifting effect of the tool, as it properly should be), two countershaft speeds, and for cutting 30-point carbon steel at a speed of 100 feet per minute with a chip of 5/16 by 3/32 inch cross section. It is furthermore assumed that the work and cutting tool are rigidly supported, and that the cutting tool has the proper amount of rake for least resistance and a fair amount of endurance.

Calculation of Cutting Force of Tool, and Speed of Belt

In order to make absolute computations of the required diameters, we should have reliable data on the amount of cutting force at the cutting edge of the tool when cutting the various metals at high speeds, reliable data for the best efficiency of the redesigned machine, and the approximate distance between the centers of the driving spindle and counter-shaft. Several experiments were made by Hartig, and subsequently by others, on the horse-power required at the cutting edge of a tool when cutting various metals at slow speeds with the ordinary tempered steels. The horse-power was determined by multiplying the weight of chips turned off per hour by a constant whose value varied with the degree of hardness of the metal cut and the conditions of the cutting edge of the tool. The average of the several constants for about 30-point carbon steel seems to be about 0.035.

Hartig's expression is given in the formula

$$H.P. = cW = 0.035 \times \pi \times D \times n \times d \times t \times 0.28 \times 60 \qquad (9)$$

and the usual expression for horse power is given in the form,

$$H.P = \frac{FS}{33000} = \frac{F \times \pi \times D \times n}{33000 \times 12} \qquad (10)$$

in which

$H.P.$ = horse power absorbed at the cutting edge of tool.
c = constant 0.035.
W = weight of chips per hour.
D = mean diameter of the area turned off per hour.
n = revolutions per minute.
d = depth of chip.
t = thickness of chip.
0.28 = assumed average weight per cubic inch of 30-point carbon steel.
F = force at cutting edge of tool.
S = distance through which force F acts.

Equating (9) and (10),

$$F = 0.035 \times 0.28 \times 60 \times 33000 \times 12 \times d \times t = 232850\ dt.$$

Since the chip assumed to be cut is 5/16 by 3/32 inch cross section, then the force at the cutting tool is

$$F = 232850 \times 5/16 \times 3/32 \text{ inch} = 6820 \text{ pounds.}$$

If the cutting speed is 100 feet per minute then the work at the tool

$$W = 6820 \times 100 = 682000 \text{ foot-pounds.}$$

If the efficiency of the machine is assumed at 85 per cent, then the effective work of the belt must be

$$W = \frac{682000 \times 100}{85} = 802500 \text{ foot-pounds.}$$

We will assume that a 5-inch double belt is the practical limit for the belt which can be conveniently used on the machine, and that the effective pull is 70 pounds per inch width when wrapped around a cast-

iron pulley with a contact surface of 180 degrees. The total effective pull is then

$$5 \times 70 = 350 \text{ pounds.}$$

Since our belt must deliver 802500 foot-pounds per minute, its velocity will be

$$V = \frac{802500}{350} = 2295 \text{ feet per minute, approximately,}$$

which must be proportional to the diameters of the cone pulleys and the counter-shaft speeds, which are obtained as follows.

It is customary to consider speeds in a series of geometrical progression if the most efficient and convenient range of speeds is desired. The constant multiplier will then be

$$r = \left(\frac{l}{a}\right)^{\frac{1}{n_1 - 1}} \text{ in which} \qquad (11)$$

r = constant multiplier.
l = maximum R. P. M. of spindle.
a = minimum R. P. M. of spindle.
n_1 = number of speeds.

Let it be assumed that the lathe is designed to turn sizes from 1 to 6 inches. The corresponding maximum and minimum revolutions per minute for the cutting speed 100 feet per minute are 382 and 62, approximately. Then from (11)

$$r = \left(\frac{382}{62}\right)^{\frac{1}{15}}$$

$$\log r = \frac{1}{15} \log 6.16$$

$$r = 1.128$$

The whole series of speeds in geometrical progression and the diameters of stock, which will approximately correspond, if a cutting speed of 100 feet per minute be used, is given in the following table:

SPEEDS IN R.P.M.	DIAMETER OF STOCK			SPEEDS IN R.P.M.	DIAMETER OF STOCK		
382	1	CONE PULLEY SPEEDS	FAST COUNTERSHAFT SPEED	145	2 3/8	CONE PULLEY SPEEDS	SLOW COUNTERSHAFT SPEED
338	1 1/8			128	3		
300	1 1/4			113	3 3/8		
265	1 1/8			101	3 3/4		
235	1 5/8	BACK GEAR SPEEDS		89	4 5/16	BACK GEAR SPEEDS	
208	1 13/16			78	4 7/8		
184	2 1/16			69	5 1/8		
163	2 3/8			62	6		

Industrial Press, N.Y.

In Fig. 12, assume that the counter-shaft and spindle cone pulleys are the same size, as is usually the case for the engine lathe. Let

D_1 = diameter of largest step.
D_4 = diameter of smallest step.
n' = slowest speed of countershaft.

N_1 = fastest speed of spindle to correspond with slowest countershaft speed.

N_4 = slowest speed of spindle without back-gears to correspond with slowest countershaft speed.

$$\text{Let } \frac{D_1}{D_4} = r \tag{12}$$

$$\frac{D_4}{D_1} = \frac{1}{r} \tag{13}$$

Then

$$n' \times r = N_1 \tag{14}$$

$$n' \times \frac{1}{r} = N_4 \tag{15}$$

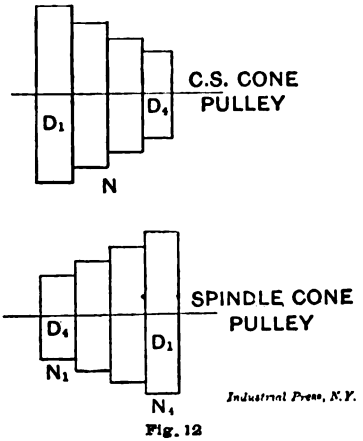

Fig. 12

Combining (14) and (15),

$$n' = \sqrt{N_1 \times N_4} \tag{16}$$

Substituting in (16) the proper speeds taken from the table,

$$n' = \sqrt{145 \times 101} = 121$$

From (14)

$$r = \frac{N_1}{n'} = \frac{145}{121} = 1.199$$

$$D_4 = \frac{V}{\pi n'} \tag{17}$$

Substituting in (17) the value of V and n',

$$D_4 = \frac{2295 \times 12}{3.14 \times 121} = 72\tfrac{1}{2} \text{ inches.}$$

From (12)

$$D_1 = r \times D_4 \tag{18}$$

Substituting in (18) the value of r and D_4

$$D_1 = 1.199 \times 72\tfrac{1}{2} = 87 \text{ inches.}$$

The front gear ratio from spindle cone speed to driving spindle speed will be $\frac{145}{89} = 1.629$.

Since the values of the constants used in computing the force at the cutting tool were taken from experiments made with slow cutting speeds, and would be considered low in view of the fact, noted by some, that the work at the tool for high speeds increases in far greater proportion than the increased cutting speeds; and since the assumed 70 pounds per inch width for effective pull at the belt is quite liberal, it is clear that the pulleys are practically at a minimum size under the conditions assumed. It is therefore convincingly apparent that for the ordinary back-geared head, belts can be of no avail for high-speed cutting except for extremely limited ranges of diameters of stock.

If the diameters of the pulleys are reduced by speeding up the belts and gearing down the spindle, nothing is availed in most cases but an added and useless expense, since every compounding element is a loan for a mortgage whose interest rates sometimes increase pretty nearly in a geometrical progression.

No. 21. Measuring Tools.—History and Development of Standard Measurements; Special Calipers; Compasses; Micrometer Tools; Protractors, etc.

No. 22. Calculation of Elements of Machine Design.—Factor of Safety; Strength of Bolts; Riveted Joints; Keys and Keyways; Toggle-joints.

No. 23. Theory of Crane Design.—Jib Cranes; Calculation of Shaft, Gears, and Bearings; Force Required to Move Crane Trolleys, etc.

No. 24. Examples of Calculating Designs.—Charts in Designing; Punch and Riveter Frames; Shear Frames; Billet and Bar Passes; etc.

No. 25. Deep Hole Drilling.—Methods of Drilling; Construction of Drills.

No. 26. Modern Punch and Die Construction.—Construction and Use of Sub-press Dies; Modern Blanking Die Construction; Drawing and Forming Dies.

No. 27. Locomotive Design, Part I.—Boilers, Cylinders, Pipes and Pistons.

No. 28. Locomotive Design, Part II.—Stephenson Valve Motion; Theory, Calculation and Design of Valve Motion; The Walschaerts Valve Motion.

No. 29. Locomotive Design, Part III.—Smokebox; Exhaust Pipe; Frames; Cross-heads; Guide Bars; Connecting-rods; Crank-pins; Axles; Driving-wheels.

No. 30. Locomotive Design, Part IV.—Springs, Trucks, Cab and Tender.

No. 31. Screw Thread Tools and Gages.

No. 32. Screw Thread Cutting.—Change Gears; Thread Tools; Kinks.

No. 33. Systems and Practice of the Drafting-Room.

No. 34. Care and Repair of Dynamos and Motors.

No. 35. Tables and Formulas for Shop and Drafting-Room.—The Use of Formulas; Solution of Triangles; Strength of Materials; Gearing; Screw Threads; Tap Drills; Drill Sizes; Tapers; Keys; Jig Bushings, etc.

No. 36. Iron and Steel.—Principles of Manufacture and Treatment.

No. 37. Bevel Gearing.—Rules and Formulas; Examples of Calculation; Tooth Outlines; Strength and Durability; Design; Methods of Cutting Teeth.

No. 38. Grinding and Lapping.—Grinding and Grinding Machines; Disk Grinders; Bursting of Emery Wheels; Kinks; Lapping Flat Work and Gages.

No. 39. Fans, Ventilation and Heating.—Fans; Heaters; Shop Heating.

No. 40. Fly-Wheels.—Their Purpose, Calculation and Design.

No. 41. Jigs and Fixtures, Part I.—Principles of Jig and Fixture Design; Drill and Boring Jig Bushings; Locating Points; Clamping Devices.

No. 42. Jigs and Fixtures, Part II.—Open and Closed Drill Jigs.

No. 43. Jigs and Fixtures, Part III.—Principles of Boring Jig Design; Boring, Reaming and Facing Tools; Milling and Planing Fixtures.

No. 44. Machine Blacksmithing.—Systems, Tools and Machines used.

No. 45. Drop Forging.—Lay-out of Plant; Methods of Drop Forging; Dies.

No. 46. Hardening and Tempering.—Hardening Plants; Treating High-Speed Steel; Hardening Gages; Case-hardening; Hardening Kinks.

No. 47. Electric Over-Head Cranes.—Design and Calculation.

No. 48. Files and Filing.—Types of Files; Using and Making Files.

No. 49. Girders for Electric Overhead Cranes.

No. 50. Principles and Practice of Assembling Machine Tools, Part I.

No. 51. Principles and Practice of Assembling Machine Tools, Part II.

No. 52. Advanced Shop Arithmetic for the Machinist.

No. 53. Use of Logarithms, and Logarithmic Tables.

No. 54. Solution of Triangles, Part I.—Methods, Rules and Examples for Practice.

No. 55. Solution of Triangles, Part II.—Tables of Trigonometric Functions.

The Industrial Press, Publishers of Machinery

49-55 Lafayette Street Subway Station, Worth Street **New York City, U.S.A**

MACHINERY'S REFERENCE SERIES

EACH PAMPHLET IS ONE UNIT IN A COMPLETE LIBRARY OF MACHINE DESIGN AND SHOP PRACTICE REVISED AND REPUBLISHED FROM MACHINERY

No. 17

STRENGTH OF CYLINDERS

SECOND EDITION—REVISED AND ENLARGED

CONTENTS

Hydraulic Cylinders—General Principles - - - - 3
Formulas for Strength of Thick, Hollow Cylinders, by JOHN H. COOPER - - - - - - - - - 6
Design of Thick Cylinders, by T. A. MARSH - - - 17
Charts and Diagrams for the Design of Thick Cylinders, by JOHN S. HOLLIDAY and JOHN S. MYERS - - 21
Thick Cylinders, by P. M. GALLO - - - - - - 28
Bursting Strength of Cast Iron Cylinders, by C. H. BENJAMIN - - - - - - - - - - 36

Copyright 1910, The Industrial Press, Publishers of MACHINERY
49-55 Lafayette Street, New York City

MACHINERY'S REFERENCE SERIES

This treatise is one unit in a comprehensive Series of Reference books, originated by MACHINERY, and including an indefinite number of compact units, each covering one subject thoroughly. The whole series comprises a complete working library of mechanical literature in which the Mechanical Engineer, the Master Mechanic, the Designer, the Machinist and Tool-maker will find the special information he wishes to secure, selected, carefully revised and condensed for him. The books are sold singly or in complete sets, as may be desired. The price of each book is 25 cents, and it is possible to secure them on even more favorable terms under special offers issued by MACHINERY'S circulation department and sent to any one on request.

The success of the Reference Series was instantaneous and copies are now widely distributed in machine shops and metal working plants everywhere.

CONTENTS OF REFERENCE BOOKS

No. 1. WORM GEARING.—Calculating Dimensions for Worm Gearing; Hobs for Worm-Gears; Location of Pitch Circle; Self-Locking Worm Gearing; etc.

No. 2. DRAFTING-ROOM PRACTICE.—Drafting-Room System; Tracing, Lettering and Mounting; Card Index Systems.

No. 3. DRILL JIGS.—Elementary Principles of Drill Jigs; Drilling Jig Plates; Examples of Drill Jigs; Jig Bushings; Using Jigs to Best Advantage.

No. 4. MILLING FIXTURES.—Elementary Principles of Milling Fixtures; Collection of Examples of Milling Fixture Design, from practice.

No. 5. FIRST PRINCIPLES OF THEORETICAL MECHANICS.

No. 6. PUNCH AND DIE WORK.—Principles of Punch and Die Work; Suggestions for the Making and Use of Dies; Examples of Die and Punch Design.

No. 7. LATHE AND PLANER TOOLS.—Cutting Tools for Planer and Lathe; Boring Tools; Shape of Standard Shop Tools; Forming Tools.

No. 8. WORKING DRAWINGS AND DRAFTING-ROOM KINKS.

No. 9. DESIGNING AND CUTTING CAMS.—Drafting of Cams; Cam Curves; Cam Design and Cam Cutting; Suggestions in Cam Making.

No. 10. EXAMPLES OF MACHINE SHOP PRACTICE.—Cutting Bevel Gears with Rotary Cutters; Making a Worm-Gear; Spindle Construction.

No. 11. BEARINGS.—Design of Bearings; Causes of Hot Bearings; Alloys for Bearings; Ball Bearings; Friction of Roller Bearings.

No. 12. MATHEMATICS OF MACHINE DESIGN.—Compiled with special reference to shafting and efficiency of hoisting machinery.

No. 13. BLANKING DIES.—Making Blanking Dies; Blanking and Piercing Dies; Construction of Split Dies; Novel Ideas in Die Making.

No. 14. DETAILS OF MACHINE TOOL DESIGN.—Cone Pulleys and Belts; Strength of Countershafts; Tumbler Gear Design; Faults of Iron Castings.

No. 15. SPUR GEARING.—First Principles of Gearing; Formulas for Spur Gearing; Design and Calculation of Gear Wheels; Strength of Gear Teeth.

No. 16. MACHINE TOOL DRIVES.—Speeds and Feeds of Machine Tools; Geared or Single Pulley Drives; Drives for High Speed Cutting Tools.

No. 17. STRENGTH OF CYLINDERS.—Formulas, Charts, and Diagrams for Thick Hollow Cylinders; Design of Thick Cylinders; Cast Iron Cylinders.

No. 18. SHOP ARITHMETIC FOR THE MACHINIST.—Tapers; Change Gears; Cutting Speeds; Feeds; Indexing; Gearing for Cutting Spirals; Angles.

No. 19. USE OF FORMULAS IN MECHANICS.—Mathematical Signs and Formulas; Strength of Materials; Graphical Methods; Levers; Center of Gravity.

No. 20. SPIRAL GEARING.—Calculating Spiral Gears; Rules, Formulas, and Diagrams for Designing Spiral Gears; Efficiency of Spiral Gearing, etc.

See inside back cover for additional titles

MACHINERY'S REFERENCE SERIES

EACH NUMBER IS ONE UNIT IN A COMPLETE LIBRARY OF MACHINE DESIGN AND SHOP PRACTICE REVISED AND REPUBLISHED FROM MACHINERY

NUMBER 17

STRENGTH OF CYLINDERS

SECOND EDITION—REVISED AND ENLARGED

CONTENTS

Hydraulic Cylinders—General Principles - - - - 3

Formulas for Strength of Thick, Hollow Cylinders, by JOHN H. COOPER - - - - - - - - - - 6

Design of Thick Cylinders, by T. A. MARSH - - - 17

Charts and Diagrams for the Design of Thick Cylinders, by JOHN S. HOLLIDAY and JOHN S. MYERS - - - 21

Thick Cylinders, by P. M. GALLO - - - - - 28

Bursting Strength of Cast Iron Cylinders, by C. H. BENJAMIN 36

Copyright, 1910, The Industrial Press, Publishers of MACHINERY
49-55 Lafayette Street, New York City

The subject treated in this number of MACHINERY'S Reference Series is one on which a considerable amount of information has been published by various writers in MACHINERY. The fundamental formulas on which the discussion is based, however, are the same, and it is, therefore, evident that the several authors to some extent deal with the subject in a similar manner. In the following chapters, the treatment of each writer has, however, been given in full, irrespective of the fact that, due to this, some formulas and statements are repeated.

CHAPTER I

HYDRAULIC CYLINDERS—GENERAL PRINCIPLES

Under the general heading of Hydraulic Cylinders may be classified all such cylindrical shells in which a uniformly distributed pressure from within acts directly against the inner circular walls of the shell. The transmitting medium of the pressure is considered as a perfect fluid, and the pressure is equal in all directions. The pressure is produced by the compression of the fluid against the ends and walls of the cylinder. The compression of the fluid forces its particles in a closer molecular contact, and as a natural sequence, a reduction in volume takes place. If the transmitting medium is water, however, the reduction of its volume under pressure is so small that it is not necessary to take into account the reduction in volume of this medium when compressed in hydraulic cylinders. The intensity of the stress on the ends and cylindrical walls of the hydraulic cylinder is, as a rule, stated in number of pounds pressure per square inch.

When calculating the strength of cast iron cylinders, having thick walls, two important points should be taken in consideration. The first one is the irregularity and lack of uniformity in the cooling off of thick cast iron cylinders when cast. This makes the texture of the material in the cylinders uneven, and makes them comparatively weaker than cylinders having thinner walls. Iron for thick cylinders should be of the best grade, and should be remelted three to four times to insure a tensile strength of about from 25,000 to 30,000 pounds per square inch. Irregularities arising from air bubbles, sand holes, and imperfect ramming of the sand in the mold, is another serious objection. To avoid these difficulties as much as possible, no cylinder for hydraulic work of any kind should be cast horizontally, but vertically. The second question to be considered is that beyond certain limits any increase in the thickness of the cylinder walls does not increase the strength of the cylinder, because at a certain point the stress will stretch the inner layers of the cylinder beyond the elastic limit, and any strain in excess of the pressure necessary to produce this result, will be followed by a molecular separation of the material, and a subsequent bursting of the cylinder. For extraordinarily high pressures, additional strength may be given to the cylinder by forcing annular rings of a stronger material on the outside in such a manner that these compress the inner walls of the cylinder when in a neutral condition. These rings may either be heated and shrunk in place, or may be forced on by hydraulic pressure. The reason why these annular rings will strengthen the cylinder to a great extent is that the stress within the cylinder has first to over-

come the compression caused in the cylinder by the rings, before there will be any tensional stresses in the walls of the cylinder.

In hydraulic calculations the tensile strength of cast iron may be taken at 18,000 pounds per square inch, and that of steel at 70,000 pounds. It seems unnecessary to state that the word diameter always, when considering hydraulic cylinders, means inside diameter, if not otherwise specified. The lowest factor of safety, generally, in hydraulic calculations is 4, and a higher factor of safety, say from 6 upwards, is most common.

In regard to the steel used for hydraulic cylinders, it may be said that for thin shells only open-hearth basic steel drawn tubes should be used, because thin steel castings are not reliable. It has been stated at times that good charcoal iron welded tubes are equal, if not superior, to steel tubes. There is nothing, however, more erroneous than such an opinion, because a charcoal iron tube, no matter how well made, will not stand the severe test to which open-hearth steel tubes may be subjected. The material of steel tubes is perfectly homogeneous, and the product is as a rule perfectly uniform.

In formulas for determining the thickness of the walls necessary in hydraulic cylinders, many authorities include certain elements which are intended to provide for the consequences of welding, casting, cooling and abnormal strains, etc. This, however, is a form of formula which is not the most advisable to use. It is always best to use a formula given in its simplest form, clearly stating all the elements used in the derivation, and then for the designer to determine the factor of safety required, based on his experience with different materials and constructions.

The simplest rule that can be written for ascertaining the thickness of the walls of pipes, tubes and thin hollow cylinders to resist internal pressure, is the following:

$$t = \frac{PR}{S} \qquad (1)$$

In this formula,

t = thickness of material in the walls of the tube.

R = internal radius of the tube,

P = internal pressure in pounds per square inch,

S = tensile strain in pounds per square inch to which the material is subjected by the pressure P.

This form of rule has the sanction of Bernoulli, Unwin, Rankine, Clandel, Weisbach, and Clarke, and with modifications for special uses by Reuleaux, Brix, Barlow, Lamé, Grashof, Trautwine, and Clarke, but as the rule of each leads to so nearly the same result, for general purposes, what is given above may be accepted as the foundation rule which must not be departed from in any case, to which, however, certain elements may be added in order to cover particular cases, a few of which will be named.

This formula is used for ascertaining the thickness of boiler shells, for resisting internal pressure, by all the boiler inspection companies,

but into it is inserted the *factor of safety* and the comparative strength of the riveted joints to the solid plates, which are of course limiting elements.

The formula for the thickness of the shell is:

$$t = \frac{PRF}{S(A \text{ or } B)}$$

In which

F = the factor of safety, usually taken as 5,

A = the strength of the punched plates,

B = the strength of the driven rivets; the least of these to be taken, because the safe strength of any structure cannot be above the strength of its weakest part.

It should be noticed that the element S may be inserted in formula (1) as the ultimate tensile strength of the material, when we wish to find out the pressure P that will burst the tube, or S may represent 1/4, 1/5, or 1/10 of the ultimate strength, in place of F, according to the degree of safety required. For weldless tubes the elements A and B must be omitted.

A rather extraordinary case of rupture of a thick hydraulic cylinder may be mentioned, as it will prove instructive. The cylinder walls were 8 inches thick, the ram was 15 inches diameter, the internal diameter of the cylinder was 16 inches, and the pressure about 6,000 pounds per square inch. By transposing our formula to find S, we have:

$$S = \frac{PR}{t} = \frac{6{,}000 \times 8}{8} = 6{,}000,$$

that is, the tensile strain to which the metal in the cylinder was subjected was 6,000 pounds per square inch, which proved sufficient to completely rupture this cylinder; it went to pieces with a loud report. This casting was made of the strongest iron, it was melted in an air furnace, such as used for rolling-mill rolls, and was most carefully made in every particular. This cylinder was replaced by a new one of same dimensions, but of softer quality, having less tensile strength, but more elasticity.

In this case it may be assumed that the material must have suffered from the effects of internal strains, the result of unequal cooling. It is well known that the metal at the center of a mass of cast iron is weaker than the metal lying near its surface. With 8 inches of thickness, and metal of hard, "tight" quality, there is ample room for the unequal strains. But it must, in particular, be remembered that the formulas for thin cylinders do not hold good for cylinders with heavy walls, and subjected to high pressure, as we shall see in the complete treatment of thick hollow cylinders given in the next chapter. We shall in the following chapters also meet with the treatment of both the practical and analytical questions involved, as presented by various writers in past issues of MACHINERY.

CHAPTER II

FORMULAS FOR STRENGTH OF THICK, HOLLOW CYLINDERS

Rules for thick-walled hollow cylinders for sustaining internal pressure are many and various. For thin cylinders, the rules given by all authorities are the same in every particular, because they regard the materials of the cylinders as having uniform texture, and every part of the same as being under equal tension, which means that the net areas of their sections may be taken as the measure of their strength. This measure will not apply to thick cylinders, as will appear later on, and for which some reasons will be given, experience proving that increased thickness does not add proportional increased strength.

The rules which provide for this anomalous condition of the material, due to its position, are based upon the general formula for the strength of hollow cylinders, required additional thickness being given, but the rules formulated are found to vary greatly by the dictum of different authorities. Some rules show great ingenuity of method. For some it is difficult to see how algebraic expression, merely, can give strength, which resides only in the material, and strictly considered, tests can apply only to the samples of material used. There is no one rule applicable to all cases, and for imperfect material there is no rule at all. In what follows will be found the work and results of many well-known writers. These are recorded for easy comparison, and worked-out examples given. Many rules are only half truths, and therefore, do not apply, and many lead to no tangible results in the line of our inquiry; they are, therefore, "better missed than found." Our work here is chiefly to deal with such practical questions of the matter as are necessary to consider, and also to furnish the data of actual performance, which point out the shortest road to successful application.

First, let us consider the cross-section of a thick, hollow cylinder, which we will suppose is divided into concentric rings, fitting closely together, each and all of these rings having a certain and equal amount of elasticity per unit of length or circumference. Then, supposing a certain uniform pressure to be exerted all around the interior boundary of the inner ring, it will readily appear that each successive circular ring—counting from the inner one to the outer one—offers less and less resistance to the internal straining force. This is manifest, for a resistance which any solid body offers to the force by which it is strained is proportional to the extension which it undergoes, divided by its length.

Under this condition of things the inner rings will be subjected to strains beyond their elastic limit, before the outer rings take their

share of the pressure; in consequence of this, the inner rings may suffer rupture before the outer rings come to a full bearing, since their capability of extension, because of their greater length, is much greater than the inner rings. In other words, the elastic limit of the outer rings is not reached until after the inner rings have failed, whence, in an instant, all fail, and a sudden burst is the result. The explanation exhibits but the elements of this complex problem, for the study of the effect of internal pressure upon thick-walled, hollow cylinders. is not a simple matter.

Let us now make and present a judicious selection of published rules, with formulas, and remarks thereon.

In Gregory's *Mathematics for Practical Men*, Royal Military Academy, Woolwich, 1825, and in reprint of same, 1833, page 289, is quoted Mr Barlow's rule·

$$t = \frac{P\,r}{S - P}$$

in which t = thickness in inches,

P = hydraulic pressure in pounds per square inch,

r = internal radius, and

S = cohesive strength of the material in pounds per square inch.

He then gives two worked-out examples by way of explanation, thus. "Let it be desired to find the thickness of metal in each of two cylinders having 12-inch bore, to just sustain an internal pressure of 1½ tons per circular inch for one of them, and 3 tons per circular inch for the other, the ultimate cohesion of cast iron being 18,000 pounds per square inch.

"Now, 1½ tons per circular inch = 4,278 pounds per square inch, and 3 tons per circular inch = 8,556 pounds per square inch, the ton being 2,240 pounds. Whence by the rule we have,

$$\frac{4{,}278 \times 6}{18{,}000 - 4{,}278} = 1.87 \text{ inch};$$

$$\frac{8{,}556 \times 6}{18{,}000 - 8{,}556} = 5.44 \text{ inches}.$$

"Whereas, on the usual principle of computation (using the rule for thin cylinders), the latter thickness would be exactly double the former: extensive experiments are necessary to tell which method deserves the preference."

Turnbull, in 1831, quotes Barlow's rule from Gregory. To obtain a result, let us introduce the figures of an actual case, say, 8 inches radius of interior, 6,000 pounds per square inch hydraulic pressure, and 18,000 pounds per square inch ultimate tensile strength of the cast iron used for the cylinder; then, inserting these figures in this formula, we will have

$$t = \frac{6{,}000 \times 8}{18{,}000 - 6{,}000} = 4 \text{ inches}.$$

Referring again to Mr. Barlow's original paper on "The resisting power of the cylinder and rules for computing the thickness of metal for presses of various powers and dimensions," published in *Transactions of the Institution of Civil Engineers*, Vol. I, London, 1836, and passing over his "investigation of the nature of the resistance opposed by any given thickness of metal in the cylinder or ring," we give his conclusion and application in his own words and formula:

"Let r be the radius of the proposed cylinder; p the pressure per square inch on the fluid; and x the required thickness; let, also, c represent the cohesive strength of a square inch of the metal. Then, the whole strain due to the interior pressure will be expressed by px, and that the greatest resistance to which the cylinder can be safely opposed is,

$$c \times \frac{rx}{r+x}$$

hence when the strain and resistance are in equilibrium, we shall have,

$$rp = \frac{rx}{r+x} \times c, \text{ or } pr + px = cx,$$

$$\text{Whence } x = \frac{pr}{c-p} = \text{the thickness sought.}$$

"Hence, the following rule in words, for computing the thickness of metal in all cases, *viz.*, multiply the pressure per square inch by the radius of the cylinder, and divide the product by the difference between the cohesive strength of a square inch of the metal and the pressure per square inch, and the quotient will be the thickness required."

Applying this rule to our case, we will have:

$$x = \frac{6{,}000 \times 8}{18{,}000 - 6{,}000} = \frac{48{,}000}{12{,}000} = 4 \text{ inches.}$$

Mr. Barlow says: "We may, without sensible error, call the cohesive power of cast iron 18,000 pounds per square inch. It will, of course, be understood that the thickness found by this rule is the least that will bear the required pressure, and that, in common practice, presses ought not to be warranted to bear above *one-third* the pressure given, unless it should appear that the estimated cohesive power of cast iron is too little; if this actually exceeds 18,000 pounds, a corresponding reduction may be made in the computed thickness."

In the beginning of his article, Mr. Barlow says: "I am not aware that any of our writers on mechanics have investigated the nature and amount of the circumferential strain which is exerted in a hydraulic cylinder by a given pressure on the fluid within." So we have in this article, presumably, the first investigation and rule upon this subject. Mr. Barlow further says: "It would appear at first sight, that, having found the strain (at the two sides imposed by the pressure of the fluid within), it would only be necessary to ascertain the thickness of metal necessary to resist this strain when applied directly to its length; this, however, is by no means the case, for if we imagine, as we must do.

that the iron, in consequence of the internal pressure, suffers a certain degree of extension, we shall find that the external circumference participates much less in this extension than the interior, and as the resistance is proportional to the extension divided by the length, it follows that the external circumference and every successive layer, from the interior to the exterior surface, offers a less and less resistance to the interior strain."

The above statements prove that Mr. Barlow recognized the existence of variable strains upon the mass of the cylinder's walls during pressure, and states clearly that they decrease from the inner to the outer surface. Mr. Barlow states distinctly the importance of knowing, definitely, the cohesive strength of the metal, and that whatever it is, it must so take its place in the formula. He does not state, however, nor caution the maker of press cylinders against the danger of the weakening effect due to the unequal shrinkage in the walls of the cylinder, while the same are cooling after being cast. That such action does take place is a matter of common observation, and yet there seems to be great difference of result, as proven by test, about this phenomenon of cooling. We may quote such high authority as Mr. Hodgkinson, who says: "Comparing the tensile strength of bars of cast iron 1, 2, and 3 inches square, I found that the relative strengths were approximately as 100, 80, and 77." Capt. James gives 100, 66, and 60 for similar bars, and that ¾-inch square bars, cut from 2- and 3-inch bars, possessed only half the strength of 1-inch square cast bars. The cause of this is attributed to the greater strength of the "skin" portions of the castings, and to the more spongy and therefore weaker texture of the interior, which increases with the thickness.

In opposition to these statements we may add, here, that test pieces have been taken from the walls of certain 5-inch thick cylinders of American cast iron which exhibited in every part an equality of tensile strength, thus showing the uniformity of texture throughout the mass, not only by observation, but by experiment. It may also be added that the texture of the material in the 8-inch cylinder walls—mentioned in the previous chapter—which failed, was, to all appearances, sound and solid, through and through, at the ruptured sections. Another feature of cast iron must be observed; there is little or no indication of an ascertainable and measurable elastic limit. *Ordinance Notes* say: "Cast iron rarely shows a well defined limit of elasticity. The elastic limit to extension is 15,000 pounds per square inch."

We know too well by experience, and we therefore quote the words of Mr. H. T. Bovey, in his work on the "Strength of Materials," 1893, that "cast iron is, perhaps the most doubtful of all materials, and therefore the greatest care should be observed in its employment. It possesses little tenacity, or elasticity; is very hard and brittle, and may fail suddenly under shock, or under an extreme variation of temperature. Unequal cooling may pre-dispose the metal to rupture, and its strength may be still further diminished by the presence of air-holes. Cast iron and similar materials receive a sensible set, even

under a small load, and the set increases with the load." We certainly know that all experience proves the need of intelligence and care in the proportioning and making of cast iron hydraulic press cylinders.

As to the choice of material, not including the steels, Rankine gives the ultimate tensile stress of cast iron 13,400 to 29,000 pounds per square inch, which assures undoubted evidence of the possibilities of this metal. High tensile strength, however, must not be the ruling element in the choice of metal for such castings as are liable to be affected by shrinkage strains. The case in practice to which reference is made, is one that came under the care and construction of the writer in the year 1874. Several presses were ordered to have 15-inch diameter of rams, with cylinders to sustain 6,000 pounds hydraulic pressure per square inch. The interior diameter for ram clearance was made 16 inches, and the walls were 8 inches thick, *i. e.*, same as the internal radius. The first one was cast from an air furnace of hard, close texture cast iron, such as rolling-mill rolls are made of; this one burst at the first trial. Another was ordered, of same dimensions, to take its place, but to be made of soft and tough iron. This one stood the test, is in use to-day, and is frequently put under a hydraulic pressure of 4 tons, or 8,000 pounds, per square inch.

Referring now to some of the published rules, the following notation is made uniform for the first five formulas:

Let P = internal pressure in pounds per square inch,

S = tensile stress in pounds per square inch to which the material is subjected by the pressure P,

D = internal diameter of the cylinder in inches,

t = thickness of metal in inches,

e = base of Napierian system of logarithms = 2.71828.

The ultimate tensile strength of cast iron is taken at 18,000 pounds per square inch; the internal hydraulic pressure at 6,000 pounds per square inch, and the internal diameter 16 inches. The worked-out result is given with each formula.

Bernoulli, Unwin, Rankine, Claudel, Weisbach, Van Buren, Haswell, Lanza, and Clark, give this first formula for ascertaining the thickness of *thin* cylinders, without joint:

$$t = \frac{D}{2}\,\frac{P}{S} \text{ or } t = \frac{Pr}{S} = 2\ 2/3 \text{ inches.} \qquad (1)$$

in which r = radius, or half of D.

Reuleaux gives for thick cylinders:

$$t = \frac{D}{2}\,\frac{P}{S}\left(1 + \frac{P}{2S}\right) = 3.1 \text{ inches.} \qquad (2)$$

Trautwine repeats the same, but adds a factor of safety k, which we will assume to be 3, thus:

$$t = \frac{D}{2}\,\frac{Pk}{S}\left(1 + \frac{Pk}{2S}\right) = 12 \text{ inches.} \qquad (3)$$

Omitting k, we will get $t = 3.1$ same as by Reuleaux's rule.

Brix and Clark give:

$$t = \frac{D}{2}\left(e^{\frac{P}{S}} - 1\right) = 3.16 \text{ inches,} \qquad (4)$$

e being the base of the natural logarithms.

Grashof gives:

$$t = \frac{D}{2}\left[-1 + \sqrt{\frac{3S + 2P}{3S - 4P}}\right] = 3.84 \text{ inches.} \qquad (5)$$

Prof. Merriman's formula for the thickness of *thin* cylinders to resist internal pressure, may be derived from his general formula. thus:

$$PD = 2tS, \text{ in which,}$$

P = pressure per square inch of the liquid within the cylinder in pounds.

D = internal diameter of the cylinder in inches.

t = thickness of the walls of the cylinder in inches.

S = working tensional stress of the material in pounds.

By transposition we get:

$$2t = \frac{PD}{S}.$$

By substituting the radius for the diameter, which simplifies the formula, we get:

$$t = \frac{Pr}{S},$$

and then by solving the problem of our data, although this formula is not intended for application to thick cylinders, yet we work it out for the sake of comparison with others. We have, then:

$$t = \frac{6{,}000 \times 8}{18{,}000} = 2\ 2/3 \text{ inches,}$$

which is the same result as given by the first formula. This rule is in harmony also, with the formula used by all boiler inspection companies for the thickness of boiler plates. Prof. Merriman further says: "For very thick cylinders this formula is only approximative."

Mr. J. D. Van Buren, Jr.'s formulas "are developed in reference to the *ultimate* strength of the material in order to leave the choice of a *factor of safety* to the judgment of the designer." This is the best way to give rules; if, then, the elastic limit of the material be ascertained, we will know just how far to go in putting stress upon materials, and be safe. But when a rule is given, without a hint as to the degree of its safety, we really know nothing about it.

Mr. Van Buren assumes 18,000 pounds per square inch as the ultimate and 2,500 pounds as the safe strength of good cast iron, thus allowing a liberal factor of safety—between 7 and 8. His formula is the same as the first one, as noted above, and is for thin-walled cylinders only, such as steam and water pipes.

Molesworth, in his "Pocket-Book of Engineering Formulas," gives a rule for the thickness of metal in hydraulic cylinders in this form:

$$t = \frac{\frac{1}{2} D P}{x - P},$$

in which t = thickness of metal in inches,
D = internal diameter of cylinder in inches,
P = pressure of the water in tons per square inch,
x = a constant for different metals, valued at 7 for cast iron; 14 for gun metal; 20 for wrought iron.

For our case we will have $t = \frac{\frac{1}{2} \times 16 \times 3}{7 - 3} = 6$ inches.

Nothing is said about conditions or whether this rule is for the safe, or the bursting strength. This rule is the same as Barlow's, except the constant 7 is taken instead of 18,000 pounds for the ultimate tensile strength.

Hurst's "Hand Book" gives the same rule in simpler form, thus:

$$t = \frac{P R}{7 - P} = \frac{24}{4} = 6 \text{ inches.}$$

D. K. Clark, for the sake of argument, divides the cross section of a cylinder into a number of concentric rings of equal thickness, and then supposes that each one bears less strain according to its distance from the center. He then plots a curve over the points, above a base line, representing the stress carried by each ring, and finds it to be hyperbolic, from which he formulates the following rules:

$$P = S \times \text{hyp. log. } R$$

$$S = \frac{P}{\text{hyp. log. } R}$$

$$\frac{P}{S} = \text{hyp. log. } R,$$

in which P = the internal pressure in tons or pounds per square inch,
S = the maximum tensile stress within elastic limit in tons or pounds per square inch,
R = the ratio of the diameters, that is, the outside diameter of the cylinder divided by the diameter of the bore.

These rules apply as readily as any. Let us take our previous case. Then we have from the tables: the hyp. log. of $32/16 = 0.693$; $S =$ 18,000 pounds per square inch $= 9$ tons; then $P = 9 \times 0.693 = 6.237$ = the tons pressure per square inch = 12,474 pounds, which will produce rupture, if the iron will fail at 18,000 pounds per square inch.

Lamé's treatment of this subject is classic; we will give only his formula for the thickness of the walls of thick cylinders, which is:

$$t = r \left[\left(\frac{S + P}{S - P} \right)^{\frac{1}{2}} - 1 \right]$$

in which t = thickness in inches,

S = the tension in pounds per square inch,

P = the hydraulic pressure in pounds per square inch,

r = the internal radius of the cylinder in inches.

Inserting our data in this formula, we have:

$$t = 8\left[\left(\frac{18{,}000 + 6{,}000}{18{,}000 - 6{,}000}\right)^{\frac{1}{2}} - 1\right] = 8.312 \text{ inches.}$$

Lamé is quoted by Rankine, Reuleaux, Lineham, and Burr.

It is important to observe, as noted by Reuleaux, that "the internal pressure P, should in no case exceed the permissible stress S of the material. That is, if we make P equal to, or greater than S, the cylinder will burst, however great the thickness of the cylinder be made."

Rankine gives a rule of different form, but it leads to the same result as Lame's. It is in this form:

$$\frac{R}{r} = \sqrt{\frac{f + P}{f - P}}$$

in which R = external radius of the cylinder,

r = internal radius of the cylinder,

f = tenacity of the material,

P = bursting pressure.

Introducing our dimensions, we have:

$$\frac{R}{8} = \sqrt{\frac{18{,}000 + 6{,}000}{18{,}000 - 6{,}000}} = 1.414$$

whence $R = 11.312$. Now $R - r$ = the thickness of the cylinder's walls, and therefore $11.312 - 8 = 3.312 = t$.

We omit the fluid pressure from without, which is the atmosphere in this case, and is therefore unimportant. Rankine claims for his formula the same "important consequence" as noted by Reuleaux in a preceding paragraph, but how this can be made to appear, will require a journey through a long line of formulas, not within the scope of the present treatise. The way to a clear understanding of Rankine's deductions can only be pointed out by the intelligent hand of the advanced mathematician.

The following table gives the resulting thickness that will just sustain the pressure, as obtained from the several rules quoted. The data are: 16 inches internal diameter of cylinder; 6,000 pounds hydraulic pressure per square inch; and 18,000 pounds ultimate tensile strength of the cast iron used in the cylinder.

	Thickness in inches.
Rule for thin cylinders	2.666
Rule by Reuleaux	3.100
Rule by Brix	3.160
Rule by Lamé and Rankine	3.312
Rule by Grashof	3.840
Rule by Barlow	4.000
Rule by Molesworth and Hurst	6.000

The last one of this list, probably, includes the thickness for safety, although the author does not say it; the extremes excluded we have a range from 3.1 to 4 inches; the factor of safety must be decided by the designer for the material and purpose. Much depends upon a through and through strength and the toughness of the cylinder casting. If the metal be open-grained from the internal surface into the mass, the liquid within, under pressure, will penetrate its pores; thus acting upon a larger radius, it defies the rule and destroys the cylinder. The weight of evidence here given plainly shows that the formulas which do not take into account the variation of tension in the walls of a thick cylinder, under hydraulic pressure, are not reliable.

To help the reader understand some of the difficulties in the way of solving this problem, his attention is called to the fact that when a straight bar of metal is subjected to a direct tension, every part of the same may be considered as being under equal strain and as contributing its share of resistance to prevent separation. On the other hand, as stated by D. K. Clark: "the resistance offered by the sides of a cylinder to internal pressure is not uniformly exerted throughout the thickness of the sides. On the contrary, the resistance is a maximum at the inner surface of the cylinder, and when the stress on the inner surface does not exceed the limit of its elasticity, the tensile stress diminishes uniformly through the thickness of the sides, and is a minimum at the outer surface. For cast iron, the bursting strength is measured by the total resistance opposed to breakage, when the internal surface is strained to the ultimate limit of its tensile strength."

But now we meet the difficulty of knowing the thickness of the inner skin and the degree of sponginess of the interior, if there be any; should this be excessive (offering little, or no resistance), we could not count on more than one-third the section for resistance to the internal pressure, and this condition of metal may account for many failures of press cylinders, especially when calculations are based upon the supposition of uniform density.

Of the formulas which have the sanction of science, it may be said that, while they are correct—considered as algebraic and arithmetic forms—yet, when employed for results, care must be taken that all the elements entering the formulas exactly conform to the facts; remembering always, that it is the material which gives the strength, and that the character of the stress to which it is subjected, must be known and provided for.

There is also danger due to casting the bottom in one with the cylinder, but this may be averted by forming the end spherical and of even thickness with the walls of the cylinder. Even when the bottoms are made convex to a larger radius, they are not safe; cases of failure have occurred at the joining of such curves. Reuleaux informs us that "the method used by Hummel, of Berlin, is to make the cylinder as a ring, and the bottom as a separate plate. Lorenz, of Carlsruhe, makes the bottom separately and screws it in." Leakage may be prevented by cupped leathers, same as those applied at the ram or plunger end

When a certain load is to be lifted and sustained by the ram, the tension on the metal may be decreased by an increase of the diameter of the ram. "The Constructor" says: "In the case of Hummel's hydraulic press, in the table below, if we make the ram 26 inches diameter, the pressure P will be reduced to 4,087 pounds, and S to 7,900 pounds, which is quite practicable. The cross-section of the cylinders will be as 1 to 0.79, which effects a saving of about 20 per cent in the material."

DIMENSIONS OF A FEW NOTABLE PRESSES WITH PRESSURES, AND STRESS ON MATERIAL, FROM REULEAUX'S CONSTRUCTOR

Names and Localities.	Diam. Ram.	Bore.	Thickness.	Load on Ram, pounds.	Pressure per sq. in. pounds.	Stress on metal per sq. in. pounds.
Conway Bridge.....	18	20	8¼	1,456,000	5,900	10,500
Brittania Bridge....	18	20	8¼	1,456,000	4,191	7,460
" "	20	22	10	1,031,520	8,400	14,500
" "	27.56	28.33	6 5/16	2,640,000	4,425	12,134
Hummel, of Berlin..	23	24	8½	2,200,000	5,174	10,000

Referring, again, to the admirable work, "The Constructor," by Reuleaux, translated by H. H. Suplee, we quote: "Brix calculates the stresses at different points on the radius upon the supposition that the internal diameter is not altered by the pressure. Barlow admits such an alteration by pressure that the area of the annular section is not reduced. Lamé makes neither of these assumptions, but calculates very closely the changes in the various stresses which are caused by the internal pressure at each point, and in this way has obtained the most reliable data as to the real behavior of the particles of the material.

"All these theories admit that the inner portion of the wall is strained the most, and hence it is for the inner wall that S should be chosen. The formulas of Lamé, as well as those of Barlow, show that beyond certain limits an increase in the thickness is not attended with any increase of strength. With a given resisting power S, this limit will be reached when $P = S$. Lack of homogeneity in the material may cause the danger pressure to be reached far within these limits—the material breaking without previously stretching.

"Various methods have been devised for strengthening thick cylinders, by giving the various layers different tensions. Of these methods the principal is that of hooping. The chief result of this construction is to produce a compression in the inner layer. The pressure must then first overcome this compression, and restore the normal condition, before it can produce any extension of the fibers, and as a result a much higher degree of resistance is secured than when the metal is left in its normal condition."

The calculations of the resistance of hooped cylinders offer many difficulties, and we can best refer the readers to "The Constructor," page 16, if he wishes to pursue his inquiry further. Proofs are given that the mere hooping of a cylinder with a ring of the same material as the inner tube, adds very materially to its strength. If, however, the

ring is forced on in any manner so as to produce an initial strain upon the tube, a still greater advantage will be the result. Encircling the hoops by additional hoops has been proved to add still further advantage. The study of these principles and methods, as applied to heavy guns, will be found fruitful of results in this line of inquiry. It is, therefore, important to use material capable of withstanding a high stress, and to take great care in construction and in the disposition of the material.

We have here very clear proof drawn from highest authority, that the material and the conditions to be observed in its preparation and use, must be well considered. Of these essentials, most of the rules are silent. The presentation of formulas giving widely different results, without a word of comment or sign of assistance that will enable the reader to decide upon the one that applies to his case, is very far from being a reliable "short cut" to correct knowledge. The principles must be ever kept in sight, yet the way to results must be, like the straight line, the shortest distance between two points—between the known and the unknown. It is all very well to say: "You must use judgment with rules," but the rules themselves do not furnish this. Now, judgment is the outgrowth of the larger mind, fertilized by experience, and we are aiming here to render assistance to those who want to know, by presenting the results of experience.

There is no need of discussing the rule given for thin cylinders, as the stress produced by the hydraulic pressure acting as hoop-tension, may be taken as practically uniform throughout the walls of the cylinder. It is for thick ones only, that a "hard and fast" rule cannot be made to apply.

It should be said here that great care must be taken in the adoption and use of rules for proportioning parts of machines which are to carry heavy strains. The object of the writer in this painstaking effort to collect and compare existing rules, is to show what rules we have and what they mean. The ancient advice, "Prove all things," is not more important in the lines laid down by its author, than it is in engineering.

The present chapter has dealt largely with theoretical considerations, and a thorough investigation of the rules and formulas at our disposal. In the following chapters we shall give more attention to the application of the formulas to actual design as presented by practical designers of this class of machinery.

CHAPTER III

DESIGN OF THICK CYLINDERS

A phase of design on which there are but few available data is that of thick cylinders for pressures above one thousand pounds per square inch. Comparatively few hydraulic press cylinders work at a less pressure than this, and the designing must be done very carefully both regarding strength and distribution of the metal.

Lame's formula for thick cylinders, referred to in Chapter II, is, in its usual form,

$$t = r\left(\sqrt{\frac{S+P}{S-P}} - 1\right) \tag{6}$$

sometimes inconvenient for handling. The following forms of the same formula, obtained by substitution, are preferable for the use of the designer.

$$S = P\frac{R^2 + r^2}{R^2 - r^2} \tag{7}$$

$$R = r\sqrt{\frac{S+P}{S-P}} \tag{8}$$

$$r = R\sqrt{\frac{S-P}{S+P}} \tag{9}$$

$$P = S\frac{R^2 - r^2}{R^2 + r^2} \tag{10}$$

in which:

S = maximum allowable fiber stress per square inch,
R = outer radius of cylinder, in inches,
r = inner radius of cylinder, in inches,
P = working pressure of liquid within cylinder,
$t = R - r$ = thickness of cylinder, in inches.

Form (8) of this equation may be transposed to read

$$\frac{R}{r} = \sqrt{\frac{S+P}{S-P}}$$

which reads "the ratio of the outer radius to the inner radius is equal to the square root of the quotient of the difference of the allowable working stress and the working pressure into the sum of the same." By allowing these last-named quantities to vary over a considerable range, the writer has prepared a table of ratios of outer to inner radii,

from which one may, without calculation, determine the thickness of a cylinder wall. Careful study of this form of the equation reveals that as the pressure P approaches the allowable stress S, the ratio $\frac{R}{r}$ increases very rapidly; it becomes infinite when the pressure equalizes the allowable stress, and becomes an imaginary quantity when the pressure is greater than the allowable stress. In practice, this means that for each metal there is a limiting pressure, beyond which it is impossible to design a safe cylinder, and a metal of higher tensile strength must be employed. Further, for every material there is a pressure point for each diameter of cylinder beyond which it is economical to resort to a better grade of material. The allowable stress

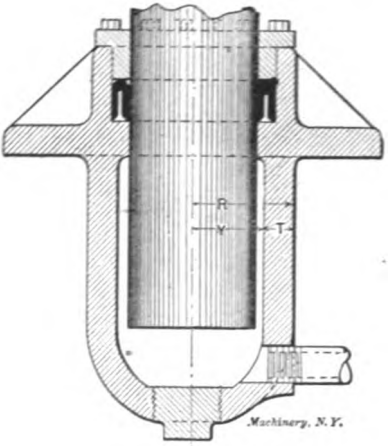

Fig. 1.

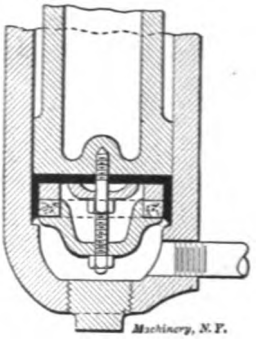

Fig. 2.

is a figure dependent on the elastic limit of the material. In hydraulic cylinders we are usually safe in working the material up to fifty per cent of the elastic limit.

In designing a cylinder to give a certain tonnage it is well to bear in mind the following points:

1. With a fixed pressure, the tonnage increases as the square of the diameter.

2. When the pressure exceeds 2,500 pounds per square inch, packings become leaky, valves do not hold, and pipe fittings give trouble; for these reasons it is advisable to keep the pressure below this point, but as this necessitates a larger cylinder, cost often is prohibitive.

Suppose a cylinder is required to give 95 to 100 tons pressure:

An 11-inch cylinder working at 2,000 pounds gives 95 tons, a 10-inch cylinder working at 2,500 pounds gives 98 tons, and a 9-inch cylinder working at 3,000 pounds gives 95 tons. For calculation let us take the 10-inch cylinder working at 2,500 pounds, and let our material be

RATIO OF OUTSIDE RADIUS TO INSIDE RADIUS, THICK CYLINDERS

Allowable Stress of Metal per square inch Section.	Working Pressure in Cylinder, Pounds per Square Inch.												
	1000	1500	2000	2500	3000	3500	4000	4500	5000	5500	6000	6500	7000
2000	1.732	.....	.....	.....	.....	.....	.....	.....	.....	.....	.....	.....	.....
2500	1.527	2 000	.....	.....	.....	.....	.....	.....	.....	.....	.....	.....	.....
3000	1.414	1.732	2.236	.....	.....	.....	.....	.....	.....	.....	.....	.....	.....
3500	1.341	1.581	1.915	2.449	.....	.....	.....	.....	.....	.....	.....	.....	.....
4000	1.291	1.488	1.732	2.081	2.645	.....	.....	.....	.....	.....	.....	.....	.....
4500	1.253	1.414	1.612	1.871	2.236	2.828	.....	.....	.....	.....	.....	.....	.....
5000	1.224	1.362	1.527	1.732	2.000	2.380	3.000	.....	.....	.....	.....	.....	.....
5500	1.201	1.322	1.464	1.638	1.844	2.121	2.516	3.162	.....	.....	.....	.....	.....
6000	1.183	1.291	1.414	1.558	1.732	1.949	2.236	2.645	3.316	.....	.....	.....	.....
6500	.....	1.264	1.374	1.500	1.647	1.825	2.049	2.345	2.768	3.464	.....	.....	.....
7000	.....	1.243	1.341	1.453	1.581	1.732	1.914	2.144	2.449	2.886	3.605	.....	.....
7500	.....	1.224	1.314	1.414	1.527	1.658	1.813	2.000	2.236	2.549	3.000	3.741	.....
8000	.....	1.209	1.291	1.381	1.483	1.599	1.732	1.889	2.081	2.328	2.645	3.109	3.872
8500	.....	1.194	1.271	1.354	1.446	1.548	1.666	1.802	1.963	2.160	2.408	2.788	3.214
9000	.....	1.183	1.253	1.330	1.414	1.507	1.612	1.732	1.871	2.065	2.236	2.440	2.828
9500	.....	.....	1.235	1.306	1.386	1 472	1.566	1.673	1.795	1.936	2.104	2.309	2.569
10000	.....	.....	1.224	1.291	1.362	1.441	1.527	1.628	1.732	1.856	2.000	2.171	2.380
10500	.....	.....	1.212	1.274	1.341	1.414	1.493	1.581	1.678	1.789	1.915	2.061	2.236
11000	.....	.....	1.201	1.260	1.322	1.390	1.464	1.544	1.633	1.732	1.844	1.972	2.121
11500	.....	.....	1.193	1 247	1.306	1.369	1.437	1.511	1.593	1.683	1.784	1.897	2.027
12000	.....	.....	1.183	1.235	1.291	1.359	1.414	1.483	1.558	1.640	1.732	1.884	1.949
12500	.....	.....	.....	1.224	1.277	1.333	1.393	1.457	1.527	1.603	1.687	1.779	1.878
13000	.....	.....	.....	1.215	1.264	1.318	1.374	1.434	1.500	1 570	1.647	1.732	1.825
13500	.....	.....	.....	1.206	1.253	1.303	1 357	1.414	1.475	1 541	1.612	1.690	1.775
14000	.....	.....	.....	1.197	1.243	1.291	1.341	1.395	1.453	1.514	1.581	1.653	1.732
14500	.....	.....	.....	1.189	1.233	1.279	1.327	1.378	1.432	1.490	1.553	1.620	1.693
15000	.....	.....	.....	1.183	1.224	1.268	1.314	1.362	1.414	1.469	1.527	1.590	1.658
15500	.....	.....	.....	1.177	1.216	1.258	1.304	1.348	1.397	1.449	1.504	1.563	1.627
16000	.....	.....	.....	1.170	1.209	1.249	1.291	1.335	1.381	1.431	1.483	1.538	1.599

cast iron whose allowable stress is 6,000 pounds per square inch. By substituting in formula (6)

$$t = 5\left(\sqrt{\frac{6000 + 2500}{6000 - 2500}} - 1\right)$$

t = thickness of cylinder wall, 2.79 inches.

Reference to the table of ratios under column of 2,500 pounds pressure and on the line of 6,000 pounds allowable stress, gives the ratio 1.558.

It is well to leave more metal in the bottom of a hydraulic cylinder than the design would seem to require, for the reason that a hole of some size must be cored in the bottom to permit the entrance of a boring bar when finishing the cylinder, and when this hole is

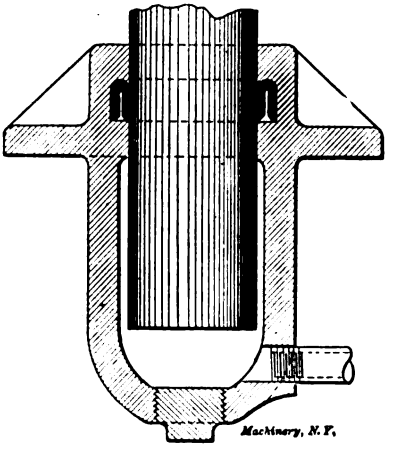

Fig. 3.

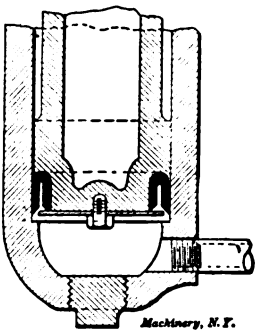

Fig. 4.

subsequently tapped and plugged, it will be found a fertile source of trouble.

Flanged cylinders, Figs. 1, 2, 3, and 4, are the type usually employed in hydraulic press work, and in addition to withstanding bursting pressure, they must withstand the beam load on the flanges. The frequent point of failure is at the junction between the flange and the cylinder. This section is usually further endangered, as the internal stresses set up by the cooling of the casting are severe, and the metal usually "draws" away because of the more rapid cooling of the flange. For this reason, care should be taken to avoid having thin portions leading abruptly from thick portions.

Patterns should be parted just above the flange, and all cylinders should be cast with the open end up so that the dirt in the iron will accumulate at the top of the casting where it can do little harm. In short cylinders, the sprues should come off from the flange and upper edge of the cylinder. On long cylinders it is necessary to have sprues further down, and it happens not infrequently that the spongy

spots where the sprues have been removed have to be plugged. Porous castings may be treated in several ways: A strong sal-ammoniac solution is a very common treatment, as is also common salt. Starch or wood pulp left under pressure will sometimes prove effective.

The common forms of hydraulic packings are: U packing with a removable follower, Fig. 1; cup packing on the end of the ram, Fig. 2; U packing in a chamber in the neck of the cylinder, Fig. 3; and U packing on the end of the ram, Fig. 4. The U packing with the removable follower seems to be the most mechanical, and gives very excellent results under any pressures. There is much contention among the competing press builders regarding the best style of packing, but the writer's observation has been, that with good workmanship and a good packing, there is little choice as to efficiency, the main point being accessibility for repacking.

CHAPTER IV

CHARTS AND DIAGRAMS FOR THE DESIGN OF THICK CYLINDERS

In the present chapter three charts for the design of thick cylinders are given, which will be found helpful to designers. The formulas on which these charts are founded have already been given in Chapter II, but the present chapter contains all the matter necessary to make it a complete whole by itself, even at the risk of some repetition of statements.

The thickness of wall in cylinders for high pressure must be determined partly from experience. In all cases a large factor of safety must be employed to allow for imperfections in the metal, strains due to outside causes, etc. In the determination of the factor of safety, the designer must be guided by current successful practice.

The most generally accepted formula for the thickness of wall is that of Lamé. It is as follows:

$$t = \frac{D}{2}\left(\sqrt{\frac{S+P}{S-P}} - 1\right) \qquad (11)$$

in which

t = thickness of wall in inches.

D = inside diameter of cylinder in inches.

P = working pressure in pounds per square inch.

S = stress in cylinder wall in pounds per square inch.

(For the derivation of Lamé's formula, see Thurston's "Iron and Steel," page 452; Rankine's "Applied Mechanics," page 290; or Burr's "The Elasticity and Resistance of the Materials of Engineering," pages 19 and 895.)

If S is taken as the ultimate tensile strength of the material, the thickness found will be that which would just be ruptured by the given working pressure. To find the actual thickness, the ultimate tensile strength must be divided by the factor of safety.

The accompanying set of curves, Figs. 5 and 6, has been devised to save the time and mathematical work involved in the solution of prob-

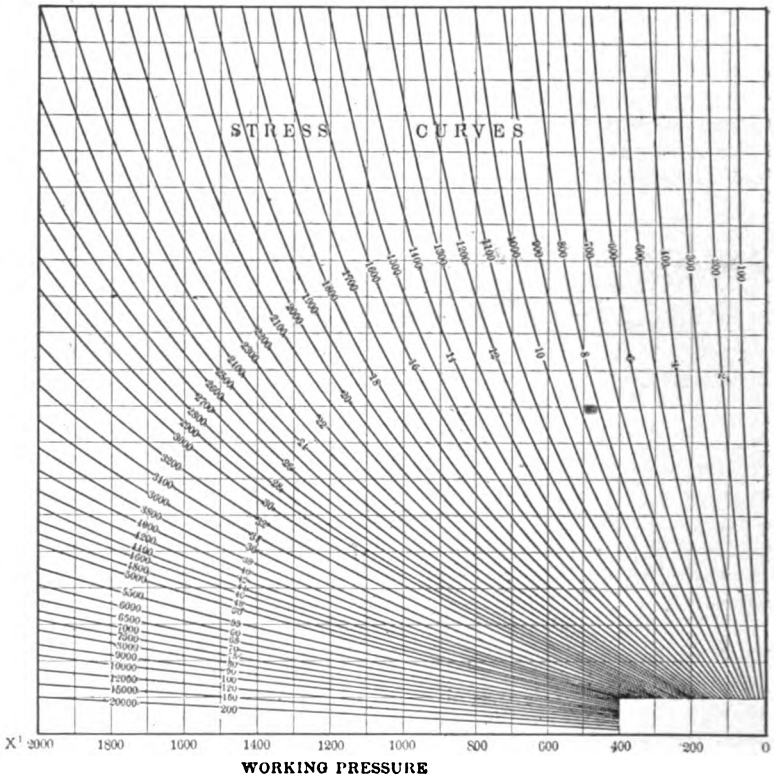

Fig. 5. Stress Curves for Designing Thick Cylinders

lems by Lamé's formula. By means of these curves any one of the four quantities may readily be determined when the other three are known.

To prepare the curves the formula was put in the form

$$\frac{R}{r} = \sqrt{\frac{S+P}{S-P}} \qquad (12)$$

in which

R = the external radius of cylinder.

r = the internal radius of cylinder.

(The formula is transposed to the form in (12) by substituting r for $\sqrt{2}$ and $R-r$ for t, and then dividing by r.)

It will be seen that the value of the ratio R/r is independent of the diameter. For convenience, denote the value of this ratio by K. The formula then becomes

$$K = \sqrt{\frac{S + P}{S - P}} \qquad (13)$$

The values of the inside diameter D are plotted in Fig. 6, and the values of the working pressure P are plotted in Fig. 5, as indicated.

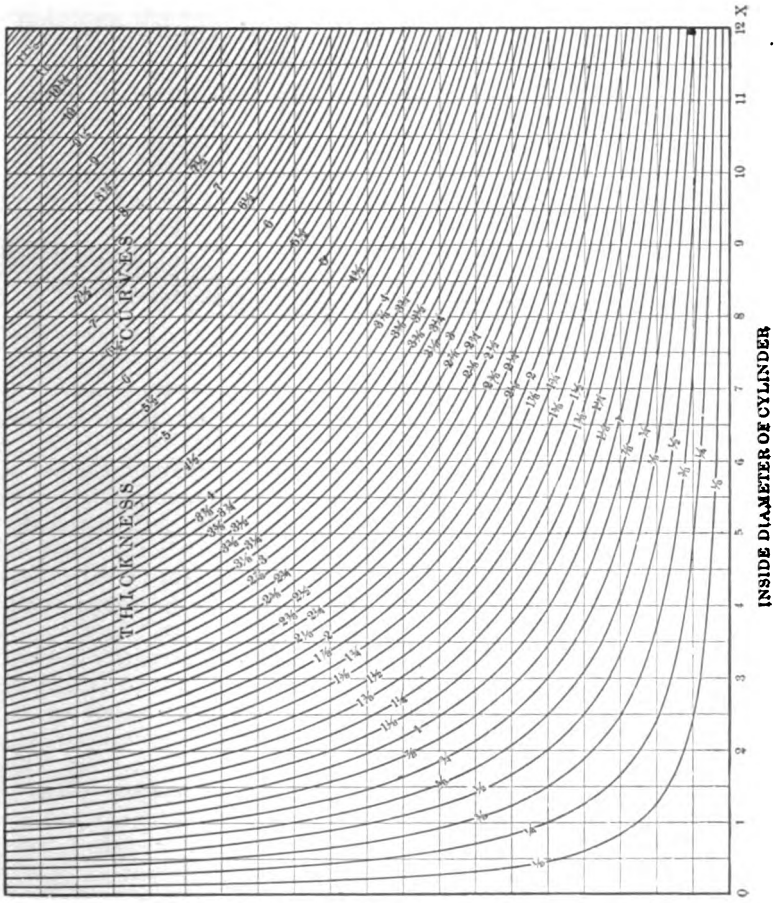

Fig. 6. Thickness Curves for Designing Thick Cylinders

The values of the ratio R/r are laid off along the right-hand vertical outline in Fig. 5, and along the lower horizontal outline in Fig. 6, commencing with one at the zero mark. The values 100, 200, etc., are then substituted for S in Formula (13), and the resulting points

located on the diagram in Fig. 5. The curves resulting from connecting the points plotted, represent the stress in the walls of the cylinder.

Since $t = R - r$ and $R = Kr$, we have

$$t = Kr - r$$
$$= r\ (K - 1)$$

and therefore $2t = d\ (K - 1)$.

This equation is of the form $xy = C$. The values ⅛, ¼, etc., are then substituted for t, and the resulting curves are drawn in diagram Fig. 6. These curves represent the thickness of the cylinder wall. The use of the curves will be best shown by an example.

Example.—$D = 5$ inches; $S = 1{,}600$ pounds per square inch; $P = 700$ pounds per square inch; find t.

Solution.—From point 700 in diagram Fig. 5, follow vertically upward to the stress curve marked 1,600. Then move horizontally to the right to the vertical outline of the diagram. Locate the corresponding point to the intersection with the vertical line in Fig. 5 on the horizontal line in Fig. 6, measuring the same distance from the zero point at the lower right-hand corner, and from this point follow vertically upward until intersecting the horizontal line from point 5. The intersection falls nearly on the thickness curve marked 1½. The required thickness is therefore 1½ inches.

The diagrams here given are intended merely for guidance, and when used for laying out hydraulic cylinders should preferably be drawn in much larger scale, which enables much closer results to be obtained. In such a case it will greatly facilitate the use of the diagrams if they are placed side by side so that the right-hand vertical outline in Fig. 5 coincides with the lower horizontal outline in Fig. 6; or, in other words, so that line $X'0$ in Fig. 5 comes in line with $0X$ in Fig. 6. If the diagrams are arranged in this manner, one can follow directly from the stress curves in the one to the thickness curves in the other, without the difficulty of finding the points on the lower horizontal line in Fig. 6, which correspond to the points found on the vertical right-hand line in Fig. 5.

It is obvious, of course, that if the thickness, the diameter, and the stress are given, and the pressure is to be found, the diagrams will be used in a reverse order from that shown in the example above. If, for instance, the thickness, the pressure, and the diameter are given, and it were required to find the stress, one enters into the diagrams from two places; that is, from the diameter and the pressure, and follows respectively the vertical and horizontal lines, account being taken of the thickness, until they intersect on a certain stress curve. From this it is evident that these diagrams permit the working out of any problem without mathematical calculations, if three of the four quantities, diameter, stress, pressure, and thickness, are given, and the fourth is to be found. Any one of the quantities may be unknown and located on the diagram.

Another writer presents the chart in Fig. 7 with the following explanation:

"Suppose it is desired to have a chart which will give the thickness of cylinders for various pressures, sizes and materials.

"For thin cylinders, not having a seam or joint, the formula is

$$t = \frac{p\,d}{2\,s},$$

where t = thickness in inches,
p = pressure in pounds per square inch,
d = internal diameter of cylinder, and
s = allowable working stress.

"For thick cylinders (as we have already seen in Chapter II), Burr, in his "Elasticity and Resistances of Materials," page 36, gives

$$t = r\left[\left(\frac{h+p}{h-p}\right)^{\frac{1}{2}} - 1\right]$$

in which r = interior radius,
h = maximum allowable hoop tension at the interior of the cylinder,
t = thickness in inches, and
p = pressure in pounds per square inch.

"Rankine gives

$$R = r\sqrt{\frac{s+p}{s-p}}$$

in which R = exterior radius,
r = interior radius,
s = allowable working stress, and
p = pressure in pounds per square inch.

"Using the same notation, Lamé gives

$$t = r\left(\sqrt{\frac{s+p}{s-p}} - 1\right)$$

and Merriman gives

$$t = \frac{r\,p}{s-p}.$$

"Cnanging the notation where required, we find that for thick cylinders, Rankine's, Lamé's, and Burr's formulas solve out to the same form:

$$t = r\left(\sqrt{\frac{s+p}{s-p}} - 1\right), \text{ or}$$

$$\frac{s}{p} = \frac{\left(\frac{t}{r}+1\right)^2 + 1}{\left(\frac{t}{r}+1\right)^2 - 1}$$

Merriman's formula solves out

$$\frac{s}{p} = \frac{r}{t} + 1.$$

For thin cylinders we have

$$\frac{s}{p} = \frac{r}{t}.$$

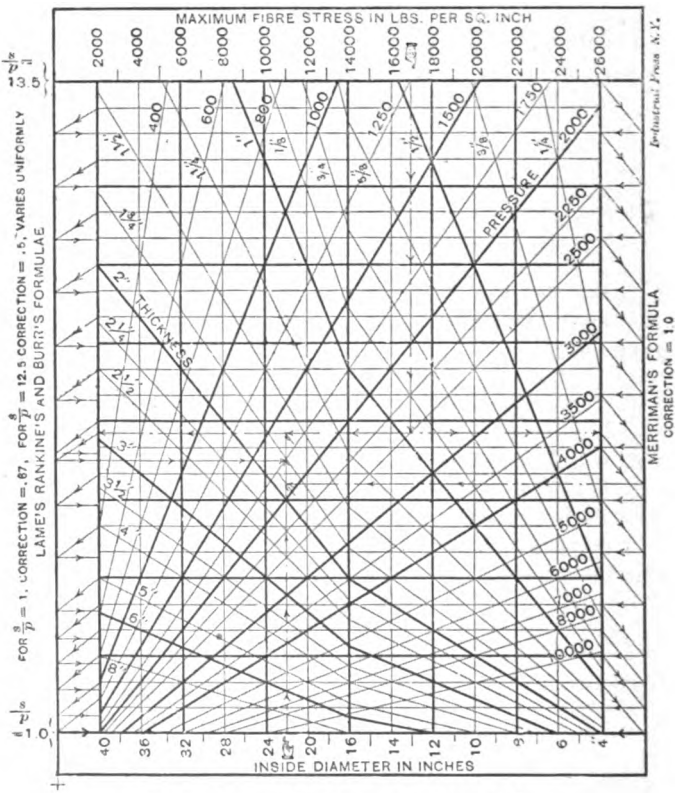

Fig. 7. Diagram for Designing Thick Cylinders

"Inserting values of $\frac{t}{r}$ in the Burr, Rankine and Lamé formulas, the corresponding values of $\frac{s}{p}$ may be calculated. Lay out the chart for thin cylinders, choosing for the first factor at the top of the chart, s, and for the second factor $\frac{1}{p}$; their product, $\frac{s}{p}$, is represented by a uniform scale on the sides. (See chart Fig. 7). The minimum reading

has been chosen as 1, and the maximum reading as 13.5; each of the small spaces is 0.5. On the bottom lay off values of r, which have been chosen from 2 inches to 20 inches and doubled to read diameter instead of radius. This radius is considered a first factor commencing at the bottom of the chart, the second factor being $\frac{1}{t}$; their product is $\frac{r}{t}$, which is equal to $\frac{s}{p}$ and is represented by the same scale at the side.

"Since tracing from stress to pressure and thence to the side of chart strikes the same value as tracing from the diameter to thickness and thence to the side, they must intersect at the required thickness. The example illustrated by the broken lines is, stress = 17,000, pressure = 2,500, diameter = 22 inches; the intersection shows the thickness to be 1⅝ inch, according to formula for thin cylinders. In Merriman's formula $\frac{s}{p} = \frac{r}{t} + 1$, hence a correction of 2 spaces of 0.5 each is made at the right side, and in the above example the intersection shows the thickness to be 1⅞ inch. The corrections on the left side for Burr's, Rankine's and Lamé's formulas are laid off from calculated values previously referred to. The example indicated shows the thickness according to this formula to be 1¾ inch, which is probably the most reliable as being based upon a more nearly perfect theory. It may be noticed that in calculating the corrections for Lamé, Rankine and Burr's formulas the values inserted were $\frac{t}{r}$, while the values of the scale on the left of the chart are $\frac{r}{t}$. This is rectified by the use of a table of reciprocals when plotting these corrections."

The various equations for thick formulas have, in the previous treatment been repeated several times, but this has been done in order to permit each writer to present in full his way of analyzing the problem.

CHAPTER V

THICK CYLINDERS

The calculation of the thickness of cylinders for a given pressure has been so much discussed, and so many formulas have been deduced, some theoretical and others empirical, that there seems to be little to add. Yet this subject is so little understood that every experienced engineer relies on his own experience, and in most cases uses no formula at all, except a kind of proportional one, that is usually all right for limited pressures and sizes of cylinders. Some formulas, although published in reputable engineering hand-books, are absolutely worthless. Others, again, are good for high pressures but valueless for low pressures, and *vice versa*.

Commonly Used Formulas

In low pressure work the general practice is to make the thickness of the metal = diameter × unit pressure ÷ twice the allowable working stress of the material, and add to this a variable quantity to allow for unsound castings and possible unknown stresses, or

$$t = \frac{D\,P}{2\,S} + a \qquad (14)$$

where t = thickness in inches,
D = diameter in inches,
P = pressure in pounds per square inch,
S = allowable tensile stress in pounds per square inch,
a = variable quantity.

The quantity a varies with the size of the cylinder and the pressure, and with the conditions under which the cylinder is operated.

For high pressures Lamé's formula is usually used and gives reliable results. This formula, transformed for practical application, is:

$$t = r\left[\sqrt{\frac{S+P}{S-P}} - 1\right] \qquad (15)$$

where t = thickness in inches,
S = allowable tensile stress in pounds per square inch,
P = working pressure in pounds per square inch,
r = internal radius.

This formula is arrived at theoretically and expresses the exact relations between the tensile stress and the working pressure of an elastic material, with the exception that it does not take the lateral contraction of the material under stress into consideration; this can be omitted for practical purposes, since the variation of the quality of the material, unsound castings, and conditions of service, more than counterbalance the gain by considering the lateral contraction.

For those that care to note the difference between Lamé's formula and the one considering lateral contraction, the latter, for cast iron and steel, using the same notation as before, is given below.

$$\text{For cast iron } t = r\left[\sqrt{\frac{4S+P}{4S-4P}} - 1\right] \tag{16}$$

$$\text{For steel } t = r\left[\sqrt{\frac{3S+P}{3S-4P}} - 1\right] \tag{17}$$

Whereas Lamé's formula is the same for any material, the latter formula varies with the material, since the lateral contraction varies. This contraction is about 1/4 for cast iron and 1/3 for steel.

For pressures ordinarily used in hydraulic work Formulas (16) and (17) give a thinner cylinder than Formula (15); but for very high pressures, such as occur in guns and sometimes in intensifiers, Formulas (16) and (17) give thicker cylinders than Formula (15). Unless one is positive of a high-grade material and sound castings, cast iron should not be used on pressures over 2,000 pounds per square inch.

Formulas (15), (16) and (17) are deduced on the supposition that the inner laminae of a cylinder rupture first, and the moment rupture occurs, the stress on the material is increased, due to the diameter being increased by the starting rupture, and the rupture continues to the outer lamina, or, commonly speaking, the cylinder is "burst." Accordingly, the formulas give such a thickness that the pressure on the inner lamina does not exceed the allowable tensile stress, provided the assumed working pressure is not exceeded. The pressure on each succeeding lamina varies as the square of its radius.

Since these formulas are deduced from the above assumptions, there must be some limited working pressure for each assumed allowable tensile stress, which, if exceeded, will produce a stress on the inner lamina exceeding this allowable tensile stress, even if the cylinder were made infinitely thick. We will now inspect Lamé's formula to find this limited working pressure. By making $P = S$, we have

$$t = r\left[\sqrt{\frac{S+S}{S-S}} - 1\right] \text{ or } t = \infty.$$

Therefore, S is, theoretically, the limit of working pressure; of course, practically it is much lower than this for economical reasons. The writer takes the thickness equal to the radius as a practical limit; if greater thickness is required a higher value for S is used, and consequently a lower factor of safety, or a better grade of material is employed.

In Formula (17) make $P = \frac{3}{4} S$, then

$$t = r\left[\sqrt{\frac{3S + 0.75S}{3S - 3S}} - 1\right] \text{ or } t = \infty,$$

In this formula the limit of working pressure is $\frac{3}{4}S$, showing that the thickness increases much more rapidly as the pressure increases than in Formula (15). In Formula (16), again, $t = \infty$ for $P = S$.

Another formula frequently used is

$$\frac{t}{r}=\frac{P}{S}\left(1+\frac{P}{S}\right) \qquad (18)$$

This is an empirical formula giving results agreeing very closely with those obtained by Formula (15) for limited pressures; it does not give the true relation between S and P, and it is simply a modification of Formula (14), with the quantity a replaced by the factor $\left(1+\frac{P}{S}\right)$ which factor does not vary correctly with increased pressures and stresses. Make $P=S$ and we get

$$\frac{t}{r}=\frac{S}{S}\left(1+\frac{S}{S}\right)=2$$

or the thickness is equal to $2r$; even if we make $P=2S$ we get a thickness apparently sufficient for the pressure; but to find what the actual tensile stress produced will be under such a pressure, we are compelled to resort to Formula (15). Formula (18) is theoretically and practically wrong.

Conditions Governing the Thickness of Cylinders

Having investigated various formulas used for calculating the thickness of cylinders and given a fair average practice, we will now go into the conditions that govern the thickness of cylinders.

1. Two castings taken from the same cast vary widely as to chemical and physical qualities and soundness, depending on what part of the cast each is taken from, conditions of mold, etc. Castings from different casts vary still more.

2. There is a limited thickness below which casting is impossible; this varies with the kind and quality of metal and the skill of the men.

3. Castings handled by unskilled crane men receive very severe shocks and knocks, often producing stresses far in excess of the stress produced in service.

4. In hydraulic systems, the cylinders are subjected to shocks, the magnitude of which depends largely on the design of the system, the service for which the cylinder is used, and the construction and method of operation of the valves.

As far as the variation of the chemical and physical properties are concerned, that is taken care of by the factor of safety. The soundness of the casting is taken care of by allowing an additional amount of metal; this varies with the kind of material, being more for cast iron than for brass, for instance. The amount to be added increases in a certain ratio as the diameter increases, and decreases in a certain ratio as the pressure increases. The increasing pressure requires more body to the metal; therefore, the casting is sounder and less metal need be added. In fact, for pressures above a certain limit this addition of metal can be omitted altogether.

The amount of the addition depends on the quality of the metal and the allowable tensile stress, and should be proportioned accord-

ingly by the designer. With a good quality of metal, the castings can be made thinner, and yet be sound. With a higher allowable tensile stress, the castings are thinner for a given pressure than with a lower, and consequently more metal must be added to make a sound and reliable casting. The limit of thickness below which casting is impossible varies with the quality of metal used, and should be decided by the designer's experience and judgment.

From the conditions enumerated, the writer has deduced a formula, conforming with theory and practice, which can be used for any working pressure high or low and any allowable tensile stress. For the primary thickness for the pressure, Formula (15) is used. Then add two quantities, one increasing as the diameter increases, and one decreasing as the diameter increases (but not in the same ratio as the first quantity), and both decreasing as the pressure per square inch increases. Following is the formula:

$$t = \left[\sqrt{\frac{S+P}{S-P}} - 1\right] + \frac{S-P}{S}(0.452 - 0.0061\,D) + \left(\frac{S-P}{S+P}\right)^5 0.023\,D \qquad (19)$$

The notation is the same as previously given.

Now let us inspect this formula: Make $P = S$ and we get $t = \infty + 0 + 0$, which is theoretically correct. Now let us make $P = 0$ and we get $t = 0 + (0.452 - 0.0061\,D) + 0.023\,D$, which is the minimum thickness. For a two-inch cylinder this would be $t = 0.4398 + 0.046 = 0.4858$ inch, and for a thirty-inch cylinder, $t = 0.269 + 0.69 = 0.959$ inch, or for a sixty-inch cylinder, $t = 0.086 + 1.38 = 1.466$ inch. These thicknesses are within the limits of possibility of casting, and the formula is, therefore, correct from a practical standpoint.

Diagram for Calculating Thick Cylinders

From the diagram, Fig. 8, the thickness of cylinders can be taken directly for any working pressure up to 5,600 pounds per square inch, and for the commonly used fiber stresses.

The line $A\,B$ is the base line on which the fiber stress curves are constructed. A 32-inch dameter cylinder was the maximum considered in plotting the curves, but the diagram can be made to read up to 40 inches diameter by extending the diagonals, reference from the fiber-stress curves always being made to the base line $A\,B$. By letting the diagonals encroach on the fiber stress chart, the limit will be the full extent of the chart; the 5,600 line or the maximum diameter of cylinder would thus be 96 inches diameter. The formula is developed for a maximum diameter of cylinder of 74 inches, above which the second turn of the right-hand member becomes negative.

The location of the fiber stress curves with respect to each other is proportional to the respective fiber stress values measured along the ordinates. For if $S = 7{,}000$ pounds per square inch is required, divide a number of intervening ordinates between the 6,000- and 8,000 pound curves in half, and draw a smooth curve through the points thus

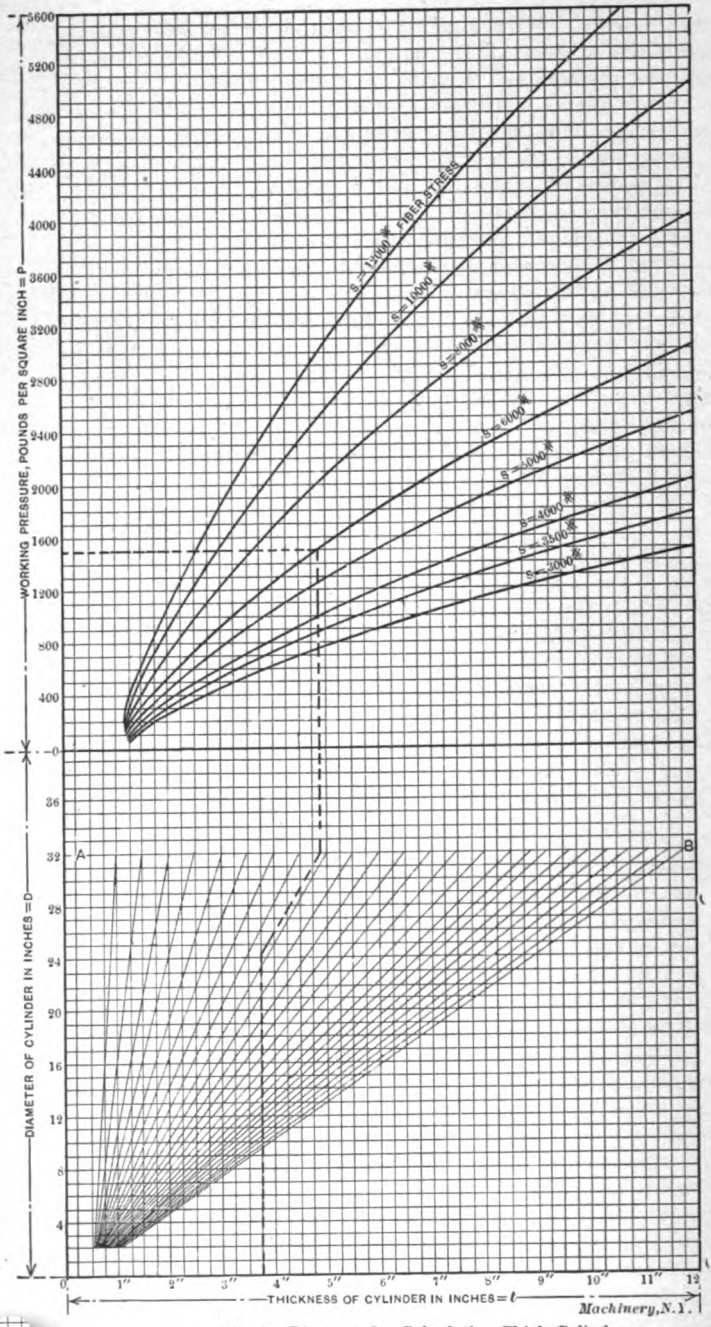
WORKING PRESSURE, POUNDS PER SQUARE INCH = P
DIAMETER OF CYLINDER IN INCHES = D
THICKNESS OF CYLINDER IN INCHES = t
S = 12000 # FIBER STRESS
S = 11000 #
S = 10000 #
S = 9000 #
S = 8000 #
S = 7000 #
S = 6000 #
S = 5000 #
S = 4000 #
S = 3500 #
S = 3000 #
A
B
Machinery, N.Y.

Fig. 8. Diagram for Calculating Thick Cylinders

r = internal radius of cylinder in inches.
D = internal diameter of cylinder in inches.
Example of use of diagram: Required, thickness of cylinder, $D = 24$ inches, $P = 1{,}500$ pounds, $S = 6{,}000$ pounds.
Follow horizontal line from $P = 1{,}500$ to 6,000-pound curve; then follow vertical line down to base-line AB; then diagonal line until opposite 24-inch diameter; then vertical line to bottom scale, where the thickness (= 3¾ inches) is read off.

Formula on which diagram is based:

$$t = r\left[\sqrt{\frac{S+P}{S-P}} - 1\right] + \frac{S-P}{S}(0.452 - 0.0061\,D) + \left(\frac{S-P}{S+P}\right)^{8} 0.023\,D$$

In which t = thickness of cylinder in inches.
S = allowable fiber stress in pounds per square inch.
P = working pressure in pounds per square inch.

located. If $S = 6{,}500$ pounds is required, the points are located one-quarter of the length of the intervening ordinates above the 6,000-pound curve. Therefore, any number of curves can be plotted with little trouble.

For intermittent stresses, such as for cylinders for steam and hydraulic work, $S = 3{,}000$ pounds for cast iron, $S = 5{,}000$ pounds for ordinary brass, and $S = 10{,}000$ pounds for steel castings is ordinarily used by the writer.

For steady or gradually applied stresses, such as pipe line fittings, cast pipes, pneumatic cylinders, etc., the stresses should be: for cast iron, $S = 3{,}500$ to 4,000 pounds, for brass, $S = 6{,}000$ to 7,000 pounds, and for steel castings, $S = 12{,}000$ pounds per square inch.

If the cylinder is turned on the outside and bored, the thickness given in the chart is too high for working pressures up to 500 pounds, and the thickness can be decreased by the following amounts with safety. Let T be the thickness required and let t be the thickness taken from the diagram, then

$$T = t - \frac{500 - P}{500}(0.31 + 0.0146\,D),$$

in which D = diameter of cylinder. It will be seen that for 500 pounds $T = t$.

For pressures of 2,000 pounds and over, cast iron should not be used, especially if subjected, additionally, to bending and tensile stresses due to external forces, as the factor of safety becomes too low, and the thickness prohibitive; even when an extra good quality of cast iron is used, such as gun iron, 2,000 pounds is about the safe limit, because it is not possible, in most cases, to determine the maximum pressure due to shocks, etc. Even if the pressure due to shocks comes within a reasonable limit, the cast iron will not last long under repeated shocks.

In low pressure cylinders, the thickness of metal is much greater than the working pressure requires, but must be such to obtain a good sound casting, and the actual pressure that could be put on such a cylinder without exceeding the allowable tensile stress of the material can be found by the following formula:

$$p = S\frac{R^2 - r^2}{R^2 + r^2} \qquad (20)$$

Where R = the outer radius, the remainder of the notation being the same as before.

To find the tensile stress that a given pressure produces, simply transpose the above formula and solve for S; thus,

$$S = p\frac{R^2 + r^2}{R^2 - r^2} \qquad (21)$$

The thickness obtained by the Formula (19) is the true thickness of the cylinder rough or finished. If the plunger works by displacement, as it generally does in hydraulic work, or with non-compressible fluids, t is the rough thickness. If the cylinder is finished, t is the finished

thickness. If the cylinder is to be rebored, t must be figured for the rebored cylinder, and the amount allowed for reboring must be added on the inside, even if a steel tube is to be forced into the rebored cylinder to obtain the original diameter. If the cylinder is subjected to shocks, this must be allowed for. In hydraulic work the shocks can usually be calculated approximately; not necessarily what the effect of the shocks actually will be, but the maximum effect under working conditions. In well designed piping systems the effect of shocks in a high pressure system is, contrary to general opinions, less than in a low pressure system for the same work.

Calculate the thickness for the static pressure, and investigate this thickness for tensile stress produced by the possible maximum shock

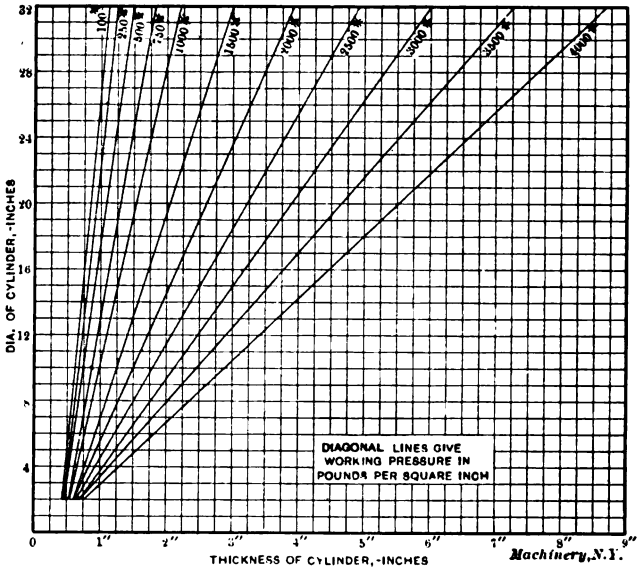

Fig. 9. Diagram for Cylinders with 10,000 Pounds per Square Inch Fiber Stress

under working conditions; if the stress comes within reasonable limits the cylinder is satisfactory. For cast iron the maximum tensile stress due to shock should not exceed 4,000 pounds when often repeated, or 4,500 pounds when rarely repeated. For brass 6,000 to 7,000 pounds, and for steel, 15,000 to 17,000 pounds are average values.

In case of hydraulic test pumps, especially as used for testing pipes, where the pipe is first filled with low pressure water before the test pressure is applied, no matter how suddenly the pressure is applied, the stress in the material cannot rise above that due to double the working pressure, since the water is not in motion, or inappreciably so. But in cylinders operating plungers, a maximum stress many times greater than the initial static pressure may result owing to the inertia of the moving water suddenly brought to rest. If the cylinder also acts

as a support, the thickness need not be increased, even if the compressive stress is nearly equal to the allowable tensile stress, a case found in hydraulic accumulators, where the plunger remains stationary, and the cylinder carries the balancing weight and resists internal bursting pressure at the same time. Yet, mathematically, the square root of the sum of the squares of the compressive stress and the tensile stress due to the weight and working pressure should not exceed the allowable tensile stress of the material. If the cylinder supports a weight producing a tensile stress, additional metal must be provided to resist this stress, exclusive of that which resists internal bursting pressures. This additional metal may be in the form of ribs, provided the thickness of the ribs is equal to the thickness of the cylinder, so as to prevent stresses due to unequal cooling or contraction. If the cylinder is subjected to bending, an additional amount of metal must be provided, the moment of inertia of which, about an axis through the center of the cylinder, is sufficient to resist the bending stress.

In addition to the diagram, Fig. 8, a diagram for 10,000 pounds fiber stress only is given in Fig. 9, showing the plotting of the curves and how the thickness increases with the working pressure. It also shows plainly that the Formula (19) deduced is a straight line equation, and gives the reader a better idea of the ratio of increase in thickness than the general diagram, Fig. 8.

CHAPTER VI

BURSTING STRENGTH OF CAST IRON CYLINDERS

Some years ago the writer reported to the American Society of Mechanical Engineers some experiments on the bursting strength of cast iron cylinders. In the same report was developed a formula for the thickness of such cylinders which assumed the following form:

$$t = \frac{p\,d}{4\,S} + \sqrt{\frac{c\,p\,d^2}{S} + \frac{p^2 d^2}{16\,S^2}}$$

where

t = thickness of shell in inches,

d = internal diameter in inches,

p = internal pressure in pounds per square inch,

S = tensile strength of metal in pounds per square inch.

The first term of the square root is in the nature of an allowance for bending or distortion of the shell from some lack of uniformity

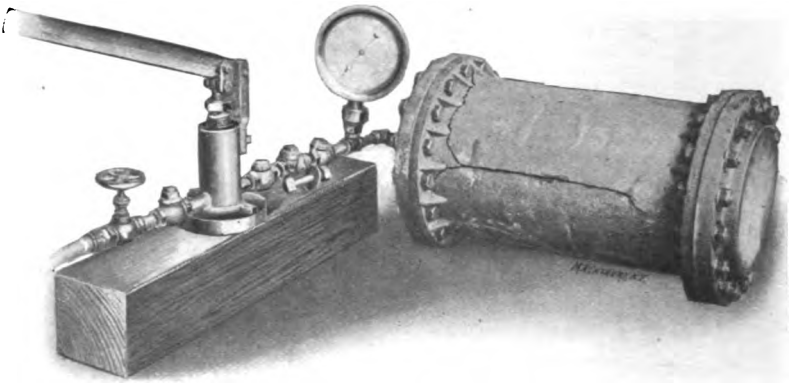

Fig. 10

in thickness or in strength, the constant, c, being determined by experiment.

If $c = 0$, the equation reduces to

$$t = \frac{p\,d}{2\,S}$$

the usual formula for thin shells.

An examination of several engine cylinders of different makes has shown values of c varying from 0.03 to 0.10 with an average value of 0.06. Experiments on nine different cylinders varying in diameter

from 6 to 12 inches gave fairly uniform values for c with an average of

$$c = 0.05.$$

The metal of the cylinders was an unusually close-grained, tough cast iron, having a tensile strength of 24,000 pounds per square inch. The tensile stress on the shell as calculated by the formula

$$S = \frac{p\,d}{2\,t}$$

averaged about one-third of this, showing the inapplicability of such a formula to cast iron shells.

In 1903-04 Messrs. A. H. Austin and R. A. Brown made another series of experiments of this character in the laboratories of the Case School

Fig. 11

of Applied Science, Cleveland, Ohio, which throws additional light on the problem.

The experimenters used the apparatus in Fig. 10, which shows the pump, the water pipe and check valves, the pressure gage, and the cylinder in position for a test. Four cylinders were tested to rupture with water pressure, each cylinder having a length of 20 inches, an internal diameter of 10⅛ inches and a thickness of shell of ¾ inch.

The flanges were of the same thickness as the shell and were reinforced by sixteen triangular brackets, as may be seen in Fig. 10. The covers were held to the flanges by sixteen soft steel bolts, ⅝ inch in diameter, having a tensile strength of 80,000 pounds per square inch. The heads of the bolts were cut off on one side so as to bring the bolt holes close to the shell and avoid as much as possible the bending moment on the flanges. Gaskets of straw board soaked in linseed oil and inserted in shallow counterbores were used to prevent leakage. The inside surface of the shell was coated with paraffin for the same

reason. Former experiments had shown that water under high pressure would find its way through very minute orifices.

The cylinder heads first used were 1⅛ inch thick and reinforced by 8 radial ribs on the outside. These proved unsatisfactory, the first head breaking at 650 pounds per square inch and the second at 850 pounds. The ribs, being on the outside, were put in tension by the

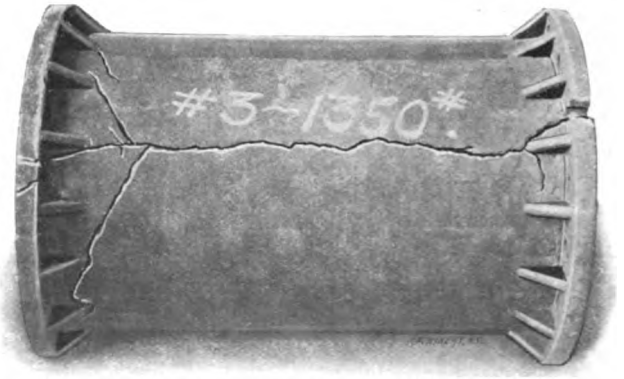

Fig. 12

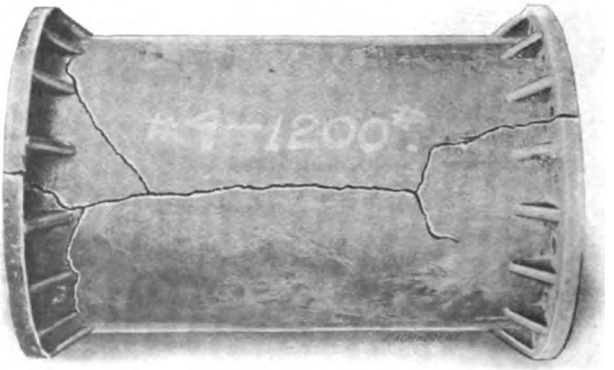

Fig. 13

buckling of the head and had no value. As it was impracticable to put ribs on the inside, the head was thickened to 2⅛ inches at the center, as shown in Fig. 10, when no more trouble was experienced. The four accompanying illustrations show the four cylinders after rupture and the pressure per square inch at the instant of breaking.

It will be noticed that the fractures are all longitudinal, there being but little of the tearing of the shell under the flange, which has been a marked feature of other experiments. It is evident that the brackets have served the purpose for which they were made in a way that no mere thickening of the flange could do. The metal used for

these cylinders was a soft, gray cast iron having a rather low tensile strength. In fact, pieces cut from the shell of the cylinders and broken in the testing machine had an average value for S of only 14,000 pounds. As tension specimens of cast iron usually show less than the real strength on account of bending, the actual strength of the iron may be slightly more than this. The average cross-breaking strength of samples from the shell was only 30,000, which is also low.

The following table shows in detail the dimensions and test pressures of the various cylinders. As before stated, the cylinders were all of the same diameter and length, 10⅛ by 20 inches.

BURSTING PRESSURE OF CAST IRON CYLINDERS

No.	Thickness.			Bursting Pressure.	Value of c.	$S=\frac{p\,d}{2\,t}$
	Max.	Min.	Ave.			
1	.775	.757	.766	1850	.0218	9040
2	.783	.697	.740	1400	.0152	10200
3	.740	.708	.721	1350	.0126	9735
4	.770	.670	.720	1200	.0177	9080

Average value of $c = .0167$.

The average value of c is shown by this table to be only one-third of that for cylinders with unsupported flanges. The values for S in the last column give the stress as calculated by the formula for thin shells, and show that the stress due to bending cannot be neglected even with the reinforced flanges. This may be more clearly shown by solving for S in the formula given at the beginning of the chapter.

$$S=\frac{p\,d}{2\,t}+\frac{cpd^2}{t^2}$$

where the first term of the second member gives the stress due to direct tension, and the second term, the stress due to bending. Assuming the average value $S = 14{,}000$ as determined by the testing machine, we have for the four cylinders:

No.	S	$\frac{p\,d}{2\,t}$	$\frac{cpd^2}{t^2}$
1	14,000	9,040	4,960
2	14,000	10,200	3,800
3	14,000	9,735	4,265
4	14,000	9,080	4,920

The "accidental" stress, as it may be called, is seen to be about one-third of the whole. The fractures in all of the cylinders were longitudinal, beginning at some weak spot near the center and extending either way, usually branching to two or more bolt holes at the flanges.

In this connection it may be of interest to notice a test recently made in the laboratories of the Case School of Applied Science of a

gasoline engine cylinder for a Peerless motor car. This cylinder broke around a circumference just above the lower flange when subjected to a hydraulic pressure of 1,600 pounds per square inch. The cylinder had an internal diameter of 4.25 inches and a shell thickness of 5-16 inch. The flange was 9-16 inch thick. The fracture showed a clean, close-grained iron. Assuming a tensile strength of 18,000 pounds per square inch and substituting values, we have $c = 0.024$.

The conclusions to be derived from these experiments are:

First, that when the cylinder flanges are unsupported, the initial fracture will be circumferential and close to the flange at a pressure very much less than that determined by the formula:

$$p = \frac{2tS}{d}.$$

Second, that when the flanges are sufficiently braced to insure longitudinal fracture, a considerable allowance must be made for bending and other accidental stresses.

No. 21. Measuring Tools.—History and Development of Standard Measurements; Special Calipers; Compasses; Micrometer Tools; Protractors, etc.

No. 22. Calculation of Elements of Machine Design.—Factor of Safety; Strength of Bolts; Riveted Joints; Keys and Keyways; Toggle-joints.

No. 23. Theory of Crane Design.—Jib Cranes; Calculation of Shaft, Gears, and Bearings; Force Required to Move Crane Trolleys, etc.

No. 24. Examples of Calculating Designs.—Charts in Designing; Punch and Riveter Frames; Shear Frames; Billet and Bar Passes; etc.

No. 25. Deep Hole Drilling.—Methods of Drilling; Construction of Drills.

No. 26. Modern Punch and Die Construction.—Construction and Use of Sub-press Dies; Modern Blanking Die Construction; Drawing and Forming Dies.

No. 27. Locomotive Design, Part I.—Boilers, Cylinders, Pipes and Pistons.

No. 28. Locomotive Design, Part II.—Stephenson Valve Motion; Theory, Calculation and Design of Valve Motion; The Walschaerts Valve Motion.

No. 29. Locomotive Design, Part III.—Smokebox; Exhaust Pipe; Frames; Cross-heads; Guide Bars; Connecting-rods; Crank-pins; Axles; Driving-wheels.

No. 30. Locomotive Design, Part IV.—Springs, Trucks, Cab and Tender.

No. 31. Screw Thread Tools and Gages.

No. 32. Screw Thread Cutting.—Change Gears; Thread Tools; Kinks.

No. 33. Systems and Practice of the Drafting-Room.

No. 34. Care and Repair of Dynamos and Motors.

No. 35. Tables and Formulas for Shop and Drafting-Room.—The Use of Formulas; Solution of Triangles; Strength of Materials; Gearing; Screw Threads; Tap Drills; Drill Sizes; Tapers; Keys; Jig Bushings, etc.

No. 36. Iron and Steel.—Principles of Manufacture and Treatment.

No. 37. Bevel Gearing.—Rules and Formulas; Examples of Calculation; Tooth Outlines; Strength and Durability; Design; Methods of Cutting Teeth.

No. 38. Grinding and Lapping.—Grinding and Grinding Machines; Disk Grinders; Bursting of Emery Wheels; Kinks; Lapping Flat Work and Gages.

No. 39. Fans, Ventilation and Heating.—Fans; Heaters; Shop Heating.

No. 40. Fly-Wheels.—Their Purpose, Calculation and Design.

No. 41. Jigs and Fixtures, Part I.—Principles of Jig and Fixture Design; Drill and Boring Jig Bushings; Locating Points; Clamping Devices.

No. 42. Jigs and Fixtures, Part II.—Open and Closed Drill Jigs.

No. 43. Jigs and Fixtures, Part III.—Principles of Boring Jig Design; Boring, Reaming and Facing Tools; Milling and Planing Fixtures.

No. 44. Machine Blacksmithing.—Systems, Tools and Machines used.

No. 45. Drop Forging.—Lay-out of Plant; Methods of Drop Forging; Dies.

No. 46. Hardening and Tempering.—Hardening Plants; Treating High-Speed Steel; Hardening Gages; Case-hardening; Hardening Kinks.

No. 47. Electric Over-Head Cranes.—Design and Calculation.

No. 48. Files and Filing.—Types of Files; Using and Making Files.

No. 49. Girders for Electric Overhead Cranes.

No. 50. Principles and Practice of Assembling Machine Tools, Part I.

No. 51. Principles and Practice of Assembling Machine Tools, Part II.

No. 52. Advanced Shop Arithmetic for the Machinist.

No. 53. Use of Logarithms, and Logarithmic Tables.

No. 54. Solution of Triangles, Part I.—Methods, Rules and Examples for Practice.

No. 55. Solution of Triangles, Part II.—Tables of Trigonometric Functions.

The Industrial Press, Publishers of Machinery

49-55 Lafayette Street Subway Station, Worth Street **New York City, U.S.A**

MACHINERY'S REFERENCE SERIES

EACH NUMBER IS ONE UNIT IN A COMPLETE LIBRARY OF MACHINE DESIGN AND SHOP PRACTICE REVISED AND REPUBLISHED FROM MACHINERY

No. 18

A Dollar's Worth of Condensed Information

Shop Arithmetic for the Machinist

By ERIK OBERG

FOURTH REVISED EDITION
TOTAL ISSUE THIRTY-FIVE THOUSAND COPIES

Price 25 Cents

CONTENTS

Introduction - - - - - - - - - - 3
Figuring Tapers - - - - - - - - - - 5
Setting Over Tail-Stock for Taper Turning - - 13
Cutting Speeds and Feeds - - - - - - 16
Screw Threads and Tap Drills - - - - - - 20
Trains of Gears - - - - - - - - - 24
Lathe Change Gearing - - - - - - - 31
Speed of Pulleys - - - - - - - - - 35
Change Gears for Milling Spirals - - - - 37
Milling Machine Indexing - - - - - - 42
Indexing for Angles - - - - - - - 44

The Industrial Press, 49-55 Lafayette Street, New York
Publishers of MACHINERY

COPYRIGHT, 1911, THE INDUSTRIAL PRESS, NEW YORK

MACHINERY'S REFERENCE SERIES

This treatise is one unit in a comprehensive Series of Reference books originated by MACHINERY, and including an indefinite number of compact units, each covering one subject thoroughly. The whole series comprises a complete working library of mechanical literature in which the Mechanical Engineer, the Master Mechanic, the Designer, the Machinist and Tool-maker will find the special information he wishes to secure, selected, carefully revised and condensed for him. The books are sold singly or in complete sets, as may be desired. The price of each book is 25 cents.

LIST OF REFERENCE BOOKS

No. 1. Worm Gearing.—Calculating Dimensions for Worm Gearing; Hobs for Worm Gears; Location of Pitch Circle; Self-Locking Worm Gearing, etc.

No. 2. Drafting-Room Practice.—Drafting-Room System; Tracing, Lettering and Mounting; Card Index Systems.

No. 3. Drill Jigs.—Elementary Principles of Drill Jigs; Drilling Jig Plates; Examples of Drill Jigs; Jig Bushings; Using Jigs to Best Advantage.

No. 4. Milling Fixtures.—Elementary Principles of Milling Fixtures; Collection of Examples of Milling Fixture Design, from practice.

No. 5. First Principles of Theoretical Mechanics.

No. 6. Punch and Die Work.—Principles of Punch and Die Work; Suggestions for the Making and Use of Dies; Examples of Die and Punch Design.

No. 7. Lathe and Planer Tools.—Cutting Tools for Planer and Lathe; Boring Tools; Shape of Standard Shop Tools; Forming Tools.

No. 8. Working Drawings and Drafting-Room Kinks.

No. 9. Designing and Cutting Cams.—Drafting of Cams; Cam Curves; Cam Design and Cam Cutting; Suggestions in Cam Making.

No. 10. Examples of Machine Shop Practice.—Cutting Bevel Gears with Rotary Cutters; Making a Worm-Gear; Spindle Construction.

No. 11. Bearings.—Design of Bearings; Causes of Hot Bearings; Alloys for Bearings; Friction and Lubrication; Friction of Roller Bearings.

No. 12. Mathematics of Machine Design.—Compiled with special reference to shafting and efficiency of hoisting machinery.

No. 13. Blanking Dies.—Making Blanking Dies; Blanking and Piercing Dies; Construction of Split Dies; Novel Ideas in Die Making.

No. 14. Details of Machine Tool Design.—Cone Pulleys and Belts; Strength of Countershafts; Tumbler Gear Design; Faults of Iron Castings.

No. 15. Spur Gearing.—Dimensions; Design; Strength; Durability.

No. 16. Machine Tool Drives.—Speeds and Feeds of Machine Tools; Geared or Single Pulley Drives; Drives for High Speed Cutting Tools.

No. 17. Strength of Cylinders—Formulas, Charts, and Diagrams.

No. 18. Shop Arithmetic for the Machinist.—Tapers; Change Gears; Cutting Speeds; Feeds; Indexing; Gearing for Cutting Spirals; Angles.

No. 19. Use of Formulas in Mechanics.—With numerous applications.

No. 20. Spiral Gearing.—Rules, Formulas, and Diagrams, etc.

No. 21. Measuring Tools.—History and Development of Standard Measurements; Special Calipers; Compasses; Micrometer Tools; Protractors, etc.

No. 22. Calculation of Elements of Machine Design.—Factor of Safety; Strength of Bolts; Riveted Joints; Keys and Keyways; Toggle-joints.

No. 23. Theory of Crane Design.—Jib Cranes; Calculation of Shaft, Gears, and Bearings; Force Required to Move Crane Trolleys; Pillar Cranes.

No. 24. Examples of Calculating Designs.—Charts in Designing; Punch and Riveter Frames; Shear Frames; Billet and Bar Passes; etc.

No. 25. Deep Hole Drilling.—Methods of Drilling; Construction of Drills.

No. 26. Modern Punch and Die Construction.—Construction and Use of Subpress Dies; Modern Blanking Die Construction; Drawing and Forming Dies.

No. 27. Locomotive Design, Part I.—Boilers, Cylinders, Pipes and Pistons.

No. 28. Locomotive Design, Part II.—Stephenson Valve Motion; Theory, Calculation and Design of Valve Motion; The Walschaerts Valve Motion.

No. 29. Locomotive Design, Part III.—Smokebox; Exhaust Pipe; Frames; Cross-heads; Guide Bars; Connecting-rods; Crank-pins; Axles; Driving-wheels.

No. 30. Locomotive Design, Part IV.—Springs, Trucks, Cab and Tender.

No. 31. Screw Thread Tools and Gages.

No. 32. Screw Thread Cutting.—Lathe Change Gears; Thread Tools; Kinks.

No. 33. Systems and Practice of the Drafting-Room.

No. 34. Care and Repair of Dynamos and Motors.

No. 35. Tables and Formulas for Shop and Drafting-Room.—The Use of Formulas; Solution of Triangles; Strength of Materials; Gearing; Screw Threads; Tap Drills; Drill Sizes; Tapers; Keys; Jig Bushings, etc.

No. 36. Iron and Steel.—Principles of Manufacture and Treatment.

No. 37. Bevel Gearing.—Rules and Formulas; Examples of Calculation; Tooth Outlines; Strength and Durability; Design; Methods of Cutting Teeth.

No. 38. Grinding and Grinding Machines.

(See inside back cover for additional titles)

MACHINERY'S REFERENCE SERIES

EACH NUMBER IS ONE UNIT IN A COMPLETE LIBRARY OF MACHINE DESIGN AND SHOP PRACTICE REVISED AND REPUBLISHED FROM MACHINERY

NUMBER 18

SHOP ARITHMETIC FOR THE MACHINIST

By ERIK OBERG

FOURTH REVISED EDITION

TOTAL ISSUE--THIRTY-FIVE THOUSAND COPIES

CONTENTS

Introduction - - - - - - - - - - 3
Figuring Tapers - - - - - - - - - 5
Setting Over Tail-Stock for Taper Turning - - 13
Cutting Speeds and Feeds - - - - - - 16
Screw Threads and Tap Drills - - - - - 20
Trains of Gears - - - - - - - - 24
Lathe Change Gearing - - - - - - - 31
Speed of Pulleys - - - - - - - - 35
Change Gears for Milling Spirals - - - - 37
Milling Machine Indexing - - - - - 42
Indexing for Angles - - - - - - - - 44

Copyright, 1911, The Industrial Press, Publishers of MACHINERY, 49-55 Lafayette Street, New York City

When preparing the third edition of this Reference Series book, a considerable amount of matter pertaining directly to general shop calculations was added. In order to provide space for this material, the chapters on more advanced shop calculations, including Square and Square Root, Use of Formulas, and Use of Tables of Sines, Cosines, Tangents and Cotangents, were omitted, and are, together with additional matter of an advanced nature, included in MACHINERY'S Reference Series No. 52, Advanced Shop Arithmetic for the Machinist.

INTRODUCTION

In the following, some of the most common shop subjects requiring simple calculations have been treated, and special efforts have been made to treat each subject as simply as possible, so that the present treatise may be of service to those, particularly, who have not previously acquired a great amount of knowledge about handling figures, and who are not familiar with mathematical expressions and usages. In order to fix the processes and rules more firmly in the reader's mind, examples have been given in almost all instances, and in many cases a number of similar examples have been given, so as to permit the repetition of the same calculation a number of times. Practically all formulas have been written out in words, as this gives a better idea about what the formula actually means, at least to those not familiar with engineering handbooks. Mathematical signs have also been avoided to a certain extent, and the corresponding words have been written out in full. In short, all precautions have been taken to present the methods in as plain and simple language as possible. Many text-books deal with principles rather than with specific examples, and to a person who is not used to solving problems of the kind that are met with in the machine shop, it is often difficult to apply the principles involved to each particular case. The purpose of this book has, therefore, been to select the most common specific cases, and to show directly how the principles are applied.

While the subject in hand has been treated to accommodate the requirements of those who demand a book that is plain and simple, it has been necessary to presuppose fundamental knowledge in regard to the use of numbers in calculations, that is, the reader must be fairly competent to add, subtract, multiply, and divide whole numbers and decimals, and also have some fundamental ideas of the use of common fractions.* If such knowledge has been acquired, no difficulty will be experienced in making use of the rules and formulas given.

It is assumed that the reader is familiar with the common mathematical signs, + (plus) which signifies addition, — (minus) which signifies subtraction, × (times) which signifies multiplication, and ÷ (divided by) which signifies division, as well as with the sign = (equals) which is put between quantities which are equal to one another to signify this condition. But it may be appropriate to call attention to the different methods commonly used for indicating division, as these may not be clear to all. Usually, as we already have said, in arithmetic, division is indicated by the sign ÷, so that we have, for instance,

$$12 \div 3 = 4.$$

A more common method in engineering books, however, is to simply

* For a simple treatise on these elements, see MACHINERY'S Jig Sheets Nos. 1A to 15A, inclusive.

write the dividend as the numerator of a fraction and the divisor as the denominator, thus:

$$\frac{12}{3}=4.$$

In that case the fraction indicates a division. This system will be followed in many of the following formulas, and it should therefore be remembered that *the line between the numerator and denominator in a fraction always indicates a division, the numerator to be divided by the denominator.*

The actual division, however, is not necessarily worked out in every case where division is thus implied. When two divisions are multiplied together, cancellation and the following operations of addition or subtraction may make the actual numerical work very simple.

Although knowledge of common fractions is presupposed, it may be well at this point to repeat the rules for multiplication and division of common fractions, as in the following many operations of this kind must be made. Two fractions are multiplied by multiplying numerator by numerator and denominator by denominator, (*numerator* being the *upper*, and *denominator* the *lower* quantity in a fraction). For instance, let it be required to multiply ¼ by ⅜. We have then,

$$\frac{1}{4}\times\frac{3}{8}=\frac{1\times 3}{4\times 8}=\frac{3}{32}$$

If the numbers to be multiplied contain whole numbers, these are first converted into fractions. Let it be required to multiply 1¼ by 3¼. We have then,

$$1\frac{1}{4}\times 3\frac{1}{4}=\frac{5}{4}\times\frac{13}{4}=\frac{65}{16}=4\frac{1}{16}$$

Division is simply the reverse of multiplication. The number which is to be divided is called the *dividend*, and the number by which we divide is called the *divisor*. If one number is to be divided by another, we simply invert the divisor, and *proceed as in multiplication.* To invert the divisor means that we place the denominator as numerator, and the numerator as denominator; for instance, 3/8, inverted, is 8/3. Suppose that we wish to divide 3/4 by 7/16. We have then,

$$\frac{3}{4}\div\frac{7}{16}=\frac{3}{4}\times\frac{16}{7}=\frac{48}{28}=1\frac{20}{28}=1\frac{5}{7}$$

If the number to be divided contains a whole number besides a fraction, we first convert this into a fraction, and then proceed as before. Suppose that we wish to divide 2¼ by 3¾. We have then,

$$2\frac{1}{4}\div 3\frac{3}{4}=\frac{9}{4}\div\frac{15}{4}=\frac{9}{4}\times\frac{4}{15}=\frac{36}{60}=\frac{3}{5}$$

A parenthesis about a mathematical expression indicates that the calculation enclosed by the parenthesis is to be carried out before the other calculations in the example; thus, $(5+8)\times 2=13\times 2=26$, but $5+(8\times 2)=5+16=21$.

CHAPTER I

FIGURING TAPERS

In all circular or round pieces of work, the expressions "taper per inch" and "taper per foot" mean the taper on the *diameter*, or the difference between the smaller and the larger diameter of a piece, measured one inch or one foot apart, as the case may be. Suppose in Fig. 1 that the diameter at *A* is one inch, and the diameter at *B*, one and one-half inch, and that the distance or dimension between *A* and *B* is 12 inches or one foot. This piece, then, tapers one-half inch per foot, because the difference between the diameters at *A* and *B* is one-half inch. In Fig. 2, the diameter at *C* is 7/16 inch, and at *D*, 1/2 inch, and the distance between *C* and *D* is one inch. This piece, therefore, tapers 1/16 inch per inch. Tapers may also be expressed for other lengths than one inch and one foot. In Fig. 3, the diameter at *E* is 1 1/8 inch, and at *F*, 1 9/32 inch, and the dimension from *E* to *F* is 5 inches. This piece of work, therefore, tapers 5/32 inch in 5 inches, the difference between 1 9/32 and 1 1/8 being 5/32.

If the taper in a certain number of inches is known, the taper in 1 inch can easily be found. If the taper in 5 inches is 5/32 inch, the taper in 1 inch equals the taper in 5 inches divided by 5, or, in this case, $5/32 \div 5 = 1/32$, which is the taper per inch. The taper per foot is found by multiplying the taper per inch by 12. In this case, the taper per foot equals $12 \times 1/32 = 3/8$ inch. The length of the work is always measured parallel to the center line (axis) of the work, and never along the tapered surface.

The problems met with in regard to figuring tapers may be of three classes. In the first place we may have given us the figures for the large and small ends of a piece of work, and the length of the work, as in Fig. 4, and we want to find the taper per foot. In the second place we may know the diameter at one end, the length of the work, and the taper per foot, as in Fig. 5, and we want to find the diameter at the other end of the work. In the third place we may know the required diameters at both ends of the work, and the taper per foot, as in Fig. 6, and we want to find the dimension between the given diameters, or the length of the piece. We will now treat each of these problems in detail.

1. *To find the taper per foot when the diameters at the large and small ends of the work, and the length, are given.*

Referring to Fig. 4, the diameter at the large end of the work is 2 5/8 inches, the diameter at the small end, 2 3/16 inches, and the length of the work 7 inches. The taper in 7 inches is then equal to the difference between 2 5/8 inches and 2 3/16 inches, or 7/16 inch. The taper in one inch equals 7/16 divided by 7, or 1/16 inch; and the taper per foot is 12 times the taper per inch, or 12 times 1/16, which equals 3/4 inch. The taper per foot in Fig. 4, then, equals 3/4 inch.

If the dimension between the small and the large diameter is not expressed in even inches, but is 5 3/16 inches, for instance, as in Fig. 7, the procedure is exactly the same. Here the diameter at the large end is 2.216 inches and at the small end 2 inches. The taper in 5 3/16 inches is, therefore, 0.216 inch. This is divided by 5 3/16 to find the taper per inch.

$$0.216 \div 5\frac{3}{16} = 0.216 \div \frac{83}{16} = 0.216 \times \frac{16}{83} = 0.0416.$$

The taper per inch, consequently equals 0.0416 inch, and the taper per foot is 12 times this amount, or almost exactly ½ inch.

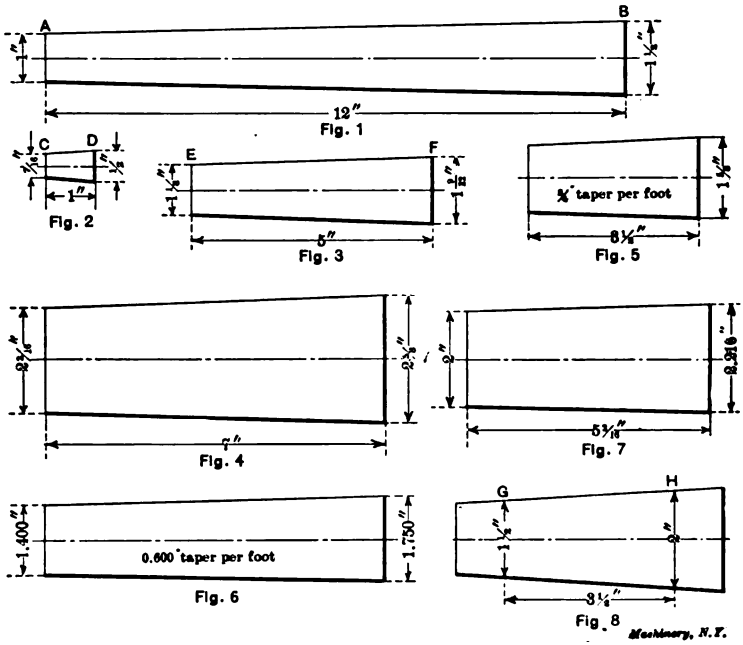

Fig. 1 Fig. 2 Fig. 3 Fig. 5 Fig. 4 Fig. 7 Fig. 6 Fig. 8

Machinery, N.Y.

Figs. 1 to 8

Expressed as a formula, if all dimensions given are in *inches*, the previous calculation would take this form:

$$\text{taper per foot} = \frac{\text{large dia.—small dia.}}{\text{length of work}} \times 12.$$

It makes, of course, no difference if the large and small diameters are measured at the extreme ends of the work or at some other place on the work, provided the length or distance between the points where the diameters are given, is stated. In Fig. 8, the smaller and larger diameters are given at certain distances from the ends of the work, but the dimension from *G* to *H* is given, and the calculation is exactly the same as if the work were no longer than between *G* and *H*. The

following examples will tend to show how the figuring of the taper per foot enters in actual shop work.

Example 1.—Fig. 9 shows the blank for a taper reamer. The diameters at the large and small ends of the flutes, and the length of the fluted part, are stated on the drawing. It is required to find the taper per foot in order to be able to set the taper turning attachment of the lathe.

Referring to the figures given in Fig. 9, the difference in diameters at the large and small ends of the taper is 15/64 inch. This divided by the length of the flute, 7½ inches, gives us the taper per inch. This we find to be 1/32. The taper per foot is 12 times the taper per inch, or, in this case, then, ⅜ inch. The taper attachment of the lathe is, therefore, set to the ⅜-inch graduation, and the taper turned will be according to the diameters given on the drawing.

Example 2.—Fig. 10 shows a taper clamping bolt, entering into the design of a special machine tool. As seen from the cut, the drawing

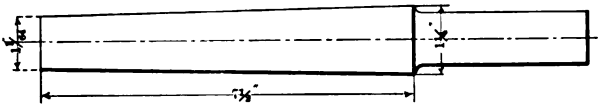

FIG. 9

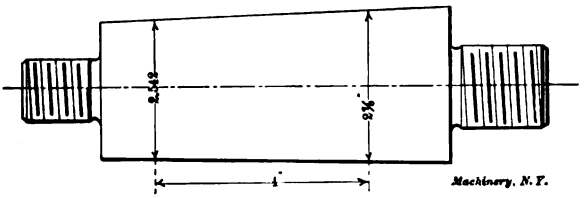

FIG. 10

Figs. 9 and 10

calls for a diameter of 2⅞ inches a certain distance from the large end of the taper, and for a diameter of 2.542 inches a distance 4 inches further down on the taper. The taper in 4 inches is then 2⅞ inches minus 2.542 inches, or 0.333 inch. The taper in one inch equals this divided by 4, or 0.0833. The taper per foot is 12 times the taper per inch, or 12 times 0.0833, which equals one inch, almost exactly. The taper to which to turn the bolt in Fig. 10 is thus one inch per foot.

2. *If the diameter at one end of the taper is given, and also the length of the work and the taper per foot, to find the diameter at the other end of the work.*

Referring to Fig. 5, the diameter at the large end of the work is 1⅝ inch, the length of the work is 3½ inches, and the taper per foot is ¾ inch. We now want to find the diameter at the small end. In this case we simply reverse the method employed in our previous problems, where we wanted to find the taper per foot. In this case we know that the taper per foot is equal to ¾ inch. The taper in one

inch must be one-twelfth of this, or ¾ inch divided by 12, which equals 1/16 inch. Now, the taper in 3½ inches, which we want to find in order to know what the diameter is at the small end of the work, must be 3½ times the taper in *one* inch, or 3½ times 1/16, which equals 7/32. The taper in 3½ inches, then, is 7/32 inch, which means that the diameter at the small end of a piece of work, 3½ inches long, is 7/32 inch smaller than the diameter at the large end. The diameter at the large end, according to our drawing, is 1⅝ inch. The diameter at the small end, being 7/32 inch smaller, is therefore 1 13/32 inch.

Expressed as a formula, the previous calculation would take this form:

$$\text{dia. at small end} = \text{dia. at large end} - \left(\frac{\text{taper per foot}}{12} \times \text{length of work}\right)$$

If we now take a case where the diameter at the small end is given, as in Fig. 11, and the diameter at the large end is wanted, the figuring is exactly the same, except of course, we *add* the amount of taper in the length of the work to the small diameter to find the large diameter. When the large diameter is given, we *subtract* the amount of

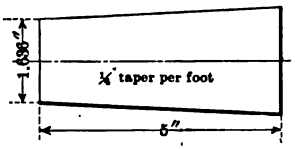

Fig. 11

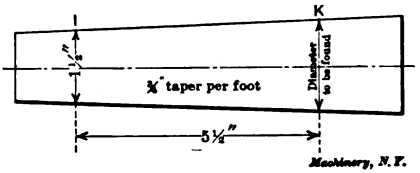

Fig. 12

taper in the length of the work to find the small diameter. This is so self-evident that no difficulties ought to be experienced on this account.

Referring again to Fig. 11, where the small diameter is given as 1.636 inch, the length of the work as 5 inches, and the taper per foot as ¼ inch, how large is the large diameter of the work? If the taper per foot is ¼ inch, the taper per inch is ¼ divided by 12 which equals 0.0208, and the taper in 5 inches consequently 5 times 0.0208, or 0.104 inch. The diameter at the large end of the work, which we are figuring, is, then, 0.104 inch larger than the diameter at the small end. The diameter at the small end is given on the drawing as 1.636 inch; adding 0.104 inch to this, we get 1.740 inch as the diameter at the large end.

Expressed as a formula, the previous calculation would take this form:

$$\text{dia. at large end} = \text{dia. at small end} + \left(\frac{\text{taper per foot}}{12} \times \text{length of work}\right)$$

It may again be well to call attention to the fact that it makes no difference whether the large and small diameters are figured at the extreme ends of the work or at some other points, as long as the

diameter to be found is located at one end of the length dimension, and the diameter stated on the drawing at the other. Thus, in Fig. 12 the diameter stated at *I* is given a certain distance up on the taper, and the diameter at *K*, which is wanted, is not at the end of the taper. But the dimension 5½ is given between the points *I* and *K* where these diameters are to be measured, and in figuring, one may reason as if the work ended at *I* and *K*, the diameter at *I* being the small diameter, the diameter at *K*, the large diameter, and 5½ inches the total length of the work. The following examples of direct practical application to shop work will prove helpful in remembering the principles outlined.

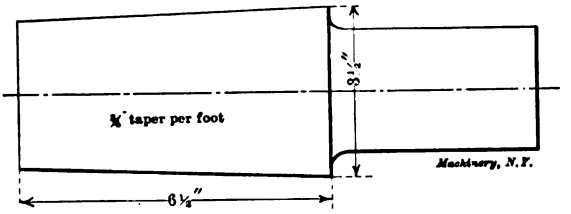

Fig. 13

Example 1.—Fig. 13 shows a taper tap, the blank for which is to be turned. The diameter at the large end of the threaded part is 3½ inches, as given on the drawing, the length of the thread is 6½ inches, and the taper per foot is ¾ inch. We want to find the diameter at the small end, in order to measure this end and ascertain that the tap blank has been correctly turned.

The taper per foot being 3/4 inch, the taper per inch is 3/4 divided by 12, or 1/16 inch. The taper in 6 1/2 inches is 6 1/2 times the taper in one inch, or 6 1/2 times 1/16 inch, which equals 13/32 inch. The taper in 6 1/2 inches being 13/32 inch means that the diameter at the small end of the tap blank is 13/32 inch smaller than the diameter at the

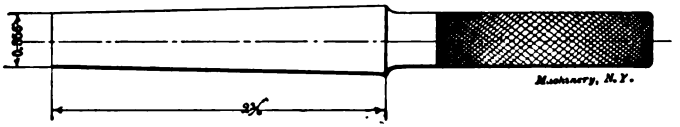

Fig. 14

large end. The diameter at the small end is, therefore, 3 3/32 inches.

Example 2.—Fig. 14 shows a taper gage for a standard Morse taper No. 1. The diameter at the small end is 0.356 inch, the length of the gage part is 2⅜ inches, and the taper per foot 0.600 inch. We want the diameter at the large end, in the first place in order to know what size stock to use for the gage, and later for measuring this diameter, when turned, to see that the taper turned is correct.

A taper of 0.600 per foot gives us a taper of 0.050 per inch. In 2⅜ inches the taper equals 2⅜ times 0.050, or 0.119 inch. This added to the diameter at the small end gives us the diameter at the large end: 0.356 + 0.119 = 0.475 inch.

Example 3.—Fig. 15 shows a taper bolt used as a clamp bolt. The diameter 3¼ inches is given 3 inches from the large end of the taper. The total length of the taper is 10 inches. The taper is ⅜ inch per foot. We want to find the diameters at the extreme large and small ends of this piece.

We will first find the diameter at the large end. The taper per foot being ⅜ inch, the taper per inch equals 1/32 inch. The taper in 3 inches is consequently 3/32. This added to 3¼ inches will give us the diameter at the large end, which is 3 11/32 inches.

To find the diameter at the small end, subtract the taper in 10 inches, which is 10 times the taper in one inch, or 10 times 1/32, which equals 5/16, from the diameter 3 11/32 inches at the large end. This gives us the diameter at the small end 3 1/32 inches.

We can also find the diameter at the small end without previously finding the diameter at the extreme large end. The total length of the taper is 10 inches, and the dimension from where the diameter 3¼ inches is given to the large end is 3 inches. Consequently, the dimension from where the diameter 3¼ inches is given to the small end is 7 inches. The taper in one inch was 1/32 inch; in 7 inches, therefore,

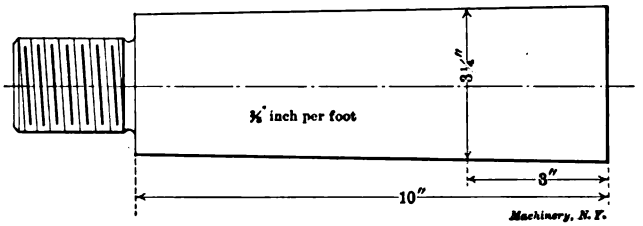

Fig. 15

7/32 inch. The diameter at the small end of the work is 7/32 inch smaller than 3¼ inches, or 3 1/32 inches, the same as found previously when we figured from the extreme large diameter of the taper.

3. *To find the distance between two given diameters on a tapered piece of work, if the taper per foot is known.*

Referring to Fig. 6, if the diameters at both ends of a tapered piece are known, together with the taper per foot, it is required to find the length of the work. Assume that the diameter at the large end of the piece is 1.750 inch, and at the small end, 1.400 inch. The taper per foot is 0.600 inch. How long is this piece of work required to be, in order to have the given diameters at the ends, with the taper stated? We know that the taper per foot is 0.600 inch. The taper per inch is then 0.600 divided by 12, or 0.050 inch. The difference in diameters between the large and the small ends of the work is 1.750 — 1.400, or 0.350 inch, which represents the taper in the length of the work. Now, we know that the taper is 0.050 inch in *one* inch. How many inches does it then require to get a taper of 0.350 inch? This we find by seeing how many times 0.050 is contained in 0.350, or, in other words, by dividing 0.350 by 0.050, which gives us 7 as answer. This means that it takes 7 inches for a piece of work to taper 0.350 inch,

if the taper is 0.600 per foot. The length of the work consequently is 7 inches in the case referred to.

Expressed as a formula the previous calculation would take the form:

$$\text{length of work} = \frac{\text{dia. at large end} - \text{dia. at small end}}{\text{taper per foot} \div 12}$$

The taper per foot divided by 12, as given in the formula above, of course simply represents the taper per inch. The formula may therefore be written:

$$\text{length of work} = \frac{\text{dia. at large end} - \text{dia. at small end}}{\text{taper per inch}}$$

A few examples of the application of these rules will make their use in actual shop work clearer.

Example 1.—A taper reamer, Fig. 16, for standard taper pins, having ¼ inch taper per foot, is to be made. The diameter at the large end of the flutes is wanted to be 0.720 inch. The diameter at the point of the reamer must be 0.580 inch, in order to accommodate the longest

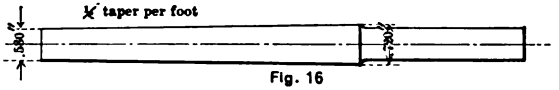

Fig. 16

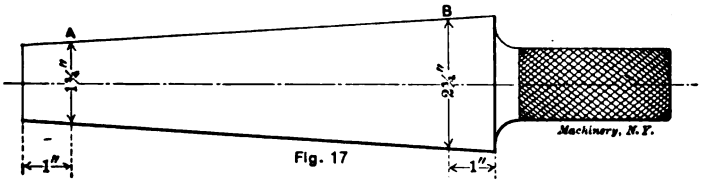

Fig. 17

Figs. 16 and 17

taper pins of this size made. How long should the fluted part of the reamer be made?

The taper per foot is ¼ or 0.250 inch, and the taper per inch, consequently, 0.250 divided by 12, or 0.0208 inch. The taper in the length of reamer required is equal to the difference between the large and the small diameter, or 0.720 — 0.580 equals 0.140 inch. This amount of taper divided by the taper in one inch gives the required length of the flutes. Thus, 0.140, divided by 0.0208 equals 6.731, which represents the length of flutes required. This dimension is nearly 6¾ inches, and, being a length dimension of no particular importance, it would be made to an even fractional part of an inch.

Example 2.—In Fig. 17 is shown a taper master gage intended for inspecting taper ring gages of various dimensions. The smallest diameter of the smallest ring gage is 1¾ inch, and the largest diameter of the largest ring gage is 2¾ inches. The taper per foot is 1½ inch. It is required that the master gage extends one inch outside of the gages at both the small and the large ends, when these are tested. How long should the gage portion of this piece of work be?

When the taper per foot and the length of the work are given, we can calculate the amount to set over the tail-stock from the following formula:

$$\text{amount to set over tail-stock} = \tfrac{1}{2} \times \left(\frac{\text{taper per foot}}{12} \times \text{length of work} \right)$$

Expressed in words, this formula reads:

To find the amount to set over the tail-stock when the taper per foot and the length of the work are known, *divide the taper per foot by* 12, *multiply the quotient by the length of the work, and divide the result by* 2. (To divide by 2 is the same as to multiply by ½.)

Owing to the fact that the work is not supported by the lathe centers at its extreme ends, but that the lathe centers enter into the work and support it at points a short distance from the ends, it is not practicable to calculate the amount to set over the tail-stock so definitely that the taper can be turned to exact dimensions without a trial cut; but the calculation for setting over the tail-stock gives a close approximation,

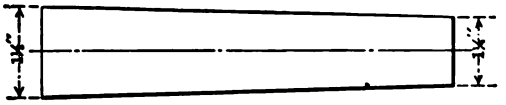

Fig. 19

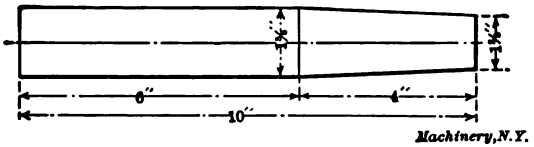

Machinery, N.Y.

Fig. 20

and when a trial cut on the work has been taken, the final adjustment of the tail-stock to obtain the correct taper can be easily made.

Method Used when the Diameters at Both Ends of a Tapered Piece are Known

If the diameters at both the large and small ends of work tapering for its full length, are given, the amount to set over the tail-stock can be determined without knowing the taper per foot, because all that is necessary to know is the taper in the length between the centers of the lathe. If, for instance, the diameter at the large end of the work is 1½ inch and the diameter at the small end 1¼ inch, as shown in Fig. 19, the amount to set over the tail-stock will be one-half of the difference between the large and small diameters, or ⅛ inch. When the diameters at the large and small ends are known, the following formula is therefore used:

amount to set over tail-stock = ½ × (large diameter—small diameter).

Expressed in words, this formula reads:

To find the amount to set over the tail-stock for work tapering for its full length, when the diameters at the large and small ends are known, *subtract the small diameter from the large, and divide the remainder by* 2.

Method Used when Part of the Work is Turned Straight and Part Tapered

If part of the work is turned straight and part of it turned tapered, as shown in Fig. 20, the taper in the whole length of the work must be determined, and then the tail-stock set over one-half of this amount. In Fig. 20 the work shown is 1⅜ inch at the small end of the taper. It is tapered for 4 inches, and the diameter at the large end of the taper is 1⅝ inch. It is then turned straight for the remaining 6 inches, the total length being 10 inches. We must first find what the taper would be in 10 inches if the whole piece had been tapered with the same taper as now required for 4 inches. The taper in 4 inches is $1\frac{5}{8} - 1\frac{3}{8} = \frac{1}{4}$ inch. The taper in 1 inch, consequently, is 1/16 inch, and in 10 inches, $10 \times 1/16 = \frac{5}{8}$ inch. The amount to set over the tail-stock is one-half of this, or 5/16 inch.

If, in a case as shown in Fig. 20, the diameter at the small end is not given, but the taper per foot of the tapered part stated instead,

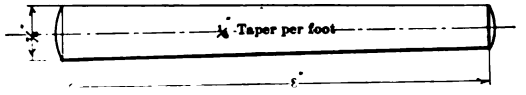

Fig. 21

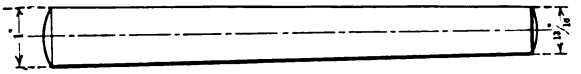

Fig. 22

the taper in the total length of the work can be found directly; if the taper per foot be ¾ inch, the taper in 10 inches is $(\frac{3}{4} \div 12) \times 10 = \frac{5}{8}$ inch. (See page 12, Rule 7.) The amount to set over the tail-stock, consequently, is 5/16 inch. The following formula is used when part of the work is turned straight and part tapered:

$$\text{amount to set over tail-stock} = \tfrac{1}{2} \times \left(\frac{\text{taper per foot}}{12} \times \text{total length of work} \right)$$

Expressed as a rule, this formula would read:

To find the amount to set over the tail-stock for work partly tapered and partly straight, when the taper per foot and the total length of the work are known *divide the taper per foot by* 12, *multiply the quotient thus obtained by the total length of the work, and divide by* 2.

If the taper per foot is not given, it must be found before using this formula and rule. (See page 12, Rule 3.)

The following examples will help to give a clear idea of the application of these rules.

Example 1.—The taper pin shown in Fig. 21 is 8 inches long, and tapers ¼ inch per foot. How much should the tail-stock be set over when turning this pin?

Dividing the taper per foot by 12 gives us 0.0208. Multiplying this figure (which represents the taper per inch) by 8 gives us 0.166 as

the taper in 8 inches. Dividing this by 2 gives us the amount required to set over the tail-stock. This amount then is 0.083 inch.

Example 2.—Another taper pin, Fig. 22, is 1 inch in diameter at the large end, and 13/16 inch at the small end. How much should the tail-stock be set over for turning this pin?

The total taper of this pin is found by subtracting the diameter at the small end, 13/16 inch, from the diameter at the large end, 1 inch. This gives us a remainder of 3/16. One-half of this amount, or 3/32 inch, represents the amount which the tail-stock should be set over.

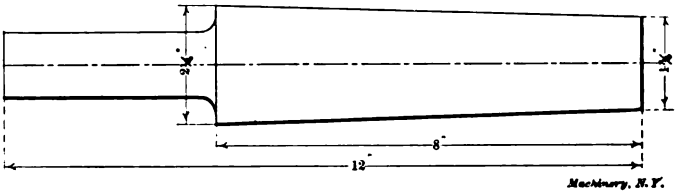

Fig. 23

Example 3.—A taper gage, as shown in Fig. 23, is to be turned by setting over the tail-stock. The diameter at the large end of the taper is 2¼ inches, the diameter at the small end is 1¾ inch, the length of the taper, 8 inches, and the total length, 12 inches. How much should the tail-stock be set over?

Subtracting the diameter at the small end, 1¾ inch, from the diameter at the large end, 2¼ inches, gives us a taper of ½ inch in 8 inches. Dividing ½ by 8, gives us the taper in one inch, which is 1/16 inch. Multiplying this by the total length of the work, 12 inches, gives us ¾ inch, which, divided by 2, gives us, finally, the required amount which the tail-stock is to be set over. This latter is, therefore, set over ⅜ inch.

CHAPTER III

CUTTING SPEEDS AND FEEDS

The cutting speed of a tool is the distance in feet which the tool point cuts in one minute; thus, if the point of a lathe tool cuts 40 feet, measured around the work, on the surface of a casting turned in the lathe, in one minute, we say that the cutting speed is 40 feet per minute.

On the planer, the cutting speed is equal to the length of cut that would be taken in one minute. If a cut 12 feet long is taken in 20 seconds, then, as 20 seconds is one-third of a minute, a cut 36 feet long could be made with the same speed in one minute, and the cutting speed is 36 feet per minute.

When drilling a hole in the drill press, the cutting speed is the number of feet that the outer corners of the cutting edges travel in one minute.

Cutting Speeds in the Lathe, Boring and Turning Mill and Drill Press

The problems in regard to cutting speeds in the lathe or turning and boring mill may be divided in two groups.

1. *The diameter of the work turned in a lathe or boring mill and the required cutting speed are known. How many revolutions per minute should the work make?*

Assume that the diameter of the work is 5 inches, and the required cutting speed 40 feet per minute. When the diameter of the work is known, its circumference equals the diameter times 3.1416. Therefore the circumference of the work in this case is $5 \times 3.1416 = 15.708$ inches. For calculations of this character it will be near enough to say that the circumference is 15.7 inches. For each revolution of the work, the length of its circumference passes the tool point once; thus for each revolution, a length of 15.7 inches passes the tool. As the cutting speed is expressed in feet, the length 15.7 inches should also be expressed in feet, which is done by dividing by 12, thus obtaining $15.7 \div 12 = 1.308$ foot, as the circumference of the work. The next question is, how many revolutions, each equivalent to 1.308 foot, does it require to get a cutting speed of 40 feet. This we get by finding how many times 1.308 is contained in 40, or, in other words, by dividing 40 by 1.308. The quotient of this division is 30.6. Therefore, 30.6 revolutions per minute are required to obtain a cutting speed of 40 feet per minute in this case.

This calculation is expressed by the formula:

$$\text{revolutions per minute} = \frac{\text{cutting speed in feet per minute}}{\left(\begin{matrix}\text{diameter of}\\ \text{work in inches}\end{matrix} \times 8.1416\right) + 12}$$

If instead of turning work 5 inches in diameter, a hole 5 inches in diameter is to be bored by an ordinary forged boring tool or a tool inserted into a boring bar, and the cutting speed is required to be 40 feet per minute, the calculation for the revolutions per minute is carried out in the same manner as mentioned before, and the same formula is used, except that in the formula we write "diameter of hole to be bored in inches" instead of "diameter of work in inches."

For work done in the drill press, the formula can also be used by substituting "diameter of hole to be drilled in inches" for "diameter of work in inches."

2. *The number of revolutions which the work makes in a lathe or boring mill, and the diameter are known. What is the cutting speed?*

A brass rod one inch in diameter is being turned. By counting the number of revolutions of the spindle of the lathe by means of a speed indicator (instrument for counting the number of revolutions of revolving shafts or spindles) it is found that the work revolves 382 revolutions per minute. To find the cutting speed, the circumference

of the work is first figured and changed into feet. The circumference in inches is $1 \times 3.1416 = 3.1416$, and $3.1416 \div 12 = 0.262$, the circumference in feet, or the distance passed over by the tool point for each revolution. During 382 revolutions, the distance passed over is $382 \times 0.262 = 100$ feet, which thus is the cutting speed per minute.

This calculation is expressed by the formula:

$$\text{cutting speed in feet per minute} = \frac{\text{dia. of work in inches} \times 3.1416}{12} \times \text{revolutions per minute}$$

If in this formula "diam. of work in inches" is substituted by "diameter of bored or drilled hole in inches," the formula can be used for cutting speeds of drills and boring tools also.

(If the cut taken on a piece being turned is deep in proportion to the diameter of the work, it is preferable in calculations for the cutting speed and revolutions per minute to consider the *mean* diameter of the cut instead of the outside diameter of the work, and use the value for the mean diameter in the formulas given. When the outside diameter and the depth of the cut are known, the mean diameter equals the outside diameter minus the depth of cut.)

Cutting Speeds of Milling Cutters

The cutting speeds of milling cutters can be calculated when the diameter of the cutter and the revolutions per minute are given. For instance, the diameter of a cutter is 6 inches and it makes 40 revolutions per minute. To find the cutting speed in feet per minute, first find the circumference of the cutter; thus, $6 \times 3.1416 = 18.8496$, or about 18.8 inches; change this to feet: thus, $18.8 \div 12 = 1.566$ feet. As the cutter makes 40 revolutions per minute, the cutting speed is $40 \times$ the circumference, or $40 \times 1.566 = 62.64$ feet per minute.

If, in the formula just given above, "diam. of work in inches" is substituted by "diameter of cutter," this formula can be used for finding the cutting speed of milling cutters.

If the required cutting speed of a cutter is given and its diameter known, and the number of revolutions at which it should be run is to be found, the formula on page 17 can be used, in this case, also, of course, "diameter of work in inches" being substituted by "diameter of cutter."

Rules for Calculating Cutting Speeds

1. *To find the number of revolutions per minute when the diameter of the work turned, the hole drilled or bored, or the milling cutter used, in inches, and the cutting speed in feet per minute are given, multiply the diameter by* 3.1416 *and divide the result by* 12. *Then divide the given cutting speed by the quotient thus obtained.*

2. *To find the cutting speed in feet per minute when the diameter of the work to be turned, the hole drilled or bored, or the milling cutter used is given in inches, and the number of revolutions per minute are known, multiply the diameter by* 3.1416 *and divide the result by* 12. *Then multiply the quotient thus obtained by the number of revolutions per minute.*

Average Cutting Speeds

The cutting speed to use when cutting metals depends primarily upon the kind of tool used and the metal being cut. It is not possible to state exactly what the correct speed would be for all different cases, but the speeds in the table below are given as embodying good average practice when ordinary carbon steel tools are used.

For high-speed steel tools, these speeds may be doubled. In starting high-speed steel drills, a cutting speed of about 50 to 70 feet per minute, for machine steel, 60 to 80 feet per minute for cast iron, and 100 to 140 feet for brass, is recommended. When a few holes have been drilled at these speeds, still higher speeds may be employed.

Feed of Cutting Tools

The feed of a lathe tool is its sidewise motion (traverse) for each revolution of the work; thus, if the feed is 1/32 inch it means that for each revolution of the work, the lathe carriage and tool move 1/32 inch along the lathe bed, thus cutting a chip 1/32 inch wide.

The feed of a drill in the drill press is the downward motion of the

TABLE OF CUTTING SPEEDS IN FEET PER MINUTE

Machine	Material			
	Tool Steel Annealed	Wrought Iron and Machine Steel	Cast Iron	Brass
Lathe, Planer and Shaper	18 to 25	30 to 40	40 to 50	80 to 125
Milling Machine	25 to 35	35 to 45	40 to 60	80 to 120
Drill Press	20	30	35	60

drill per revolution. The feed of a milling cutter is the forward movement of the milling machine table for each revolution of the cutter.

Sometimes the feed is expressed as the distance which the drill or the milling machine table moves forward in one minute. In order to avoid confusion, it is, therefore, always best to state plainly in each case whether feed per revolution or feed per minute is meant.

Time Required for Turning Work in the Lathe

The most common calculations in which the feed of a lathe tool enters is the time required for turning or boring a given piece of work, when the feed, cutting speed and diameter of work (or the number of revolutions per minute) are known.

Assume that a tool steel arbor, 2 inches in diameter, is to be turned. The length to be turned on the arbor (the length of cut) is 10 inches. The cutting speed is 25 feet per minute and the feed or traverse of the cutting tool is 1/32 inch per revolution. How long a time would it require to take one cut over the surface of the work? We first find the number of revolutions per minute of the work, which equals

$$\frac{25}{(2 \times 3.1416) \div 12} = \frac{25}{0.524} = 47.7.$$

As the tool feeds forward 1/32 inch for each revolution of the work, it is fed forward 47.7 × 1/32 or 1.49 inch in one minute. The time required to traverse the whole length of the work, 10 inches, is obtained by finding how many times 1.49 is contained in 10, or, in other words, by dividing 10 by 1.49. The quotient of this division is 6.71 minutes. It would thus take 7 minutes, approximately, to traverse the work once with the cutting speed and feed given.

Expressed as a formula the calculation takes this form:

$$\text{time required for one cut over the work} = \frac{\text{length of cut}}{\text{rev. per min.} \times \text{feed per revolution}}$$

Expressed as a rule the formula would be:

To find the time required to take one complete cut over a piece of work in the lathe when the feed per revolution, the total length of cut, and the number of revolutions per minute are given, divide the total length of the cut by the number of revolutions per minute multiplied by the feed per revolution.

If the cutting speed and diameter of work are given instead of the number of revolutions, first find the revolutions per minute before applying the formula or rule above. (The number of revolutions per minute is found by Rule 1 on page 18.)

When the feed per revolution is known, the feed per minute equals the revolution per minute times the feed per revolution.

CHAPTER IV

SCREW THREADS AND TAP DRILLS

The terms pitch and lead of screw threads are often confused. The pitch of a screw thread is the distance from the top of one thread to the top of the next thread, as shown in Fig. 24. No matter whether the screw has a single, double, triple or quadruple thread, the pitch is always the distance from the top of one thread to the top of the next thread. The lead of a screw thread is the distance the nut will move forward on the screw, if it is turned around one full revolution. In the *single-threaded screw, the pitch and lead are equal*, because the nut would move forward the distance from one thread to the next, if turned around once. In a double-threaded screw, however, the nut will move forward two threads, or twice the pitch, so that in a double-threaded screw, the lead equals twice the pitch. In a triple-threaded screw, the lead equals three times the pitch, and so forth. The lead may also be expressed as being the distance from center to center of the *same* thread, after one turn, as indicated in Fig. 25, which shows the pitch and the lead for three screws with Acme threads, the first single-threaded, the second double-threaded, and the last, triple-threaded. In a single-threaded screw, the lead is the distance to the

next thread from the one first considered. In a double-threaded screw there are two threads running side by side around the screw, so that the lead is here the distance to the second thread from the one first considered. In a triple-threaded screw, it is the distance to the third thread, and so forth.

The word pitch is often, though improperly, used in the shop to denote *number of threads per inch.* We hear of screws having 12

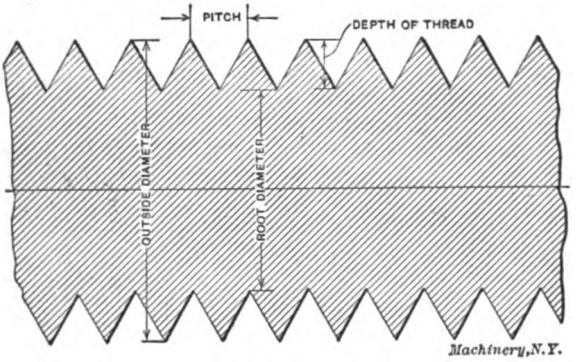

Fig. 24

pitch thread, 16 pitch thread, when 12 threads per inch and 16 threads per inch is what is really meant.

The number of threads per inch is the number of threads counted in the length of one inch, if a scale is held against the side of the screw, and the threads counted as shown in Fig. 26. If there is not a whole number of threads in one inch, count the threads in two or more inches, until the top of one thread comes opposite an inch-mark, and

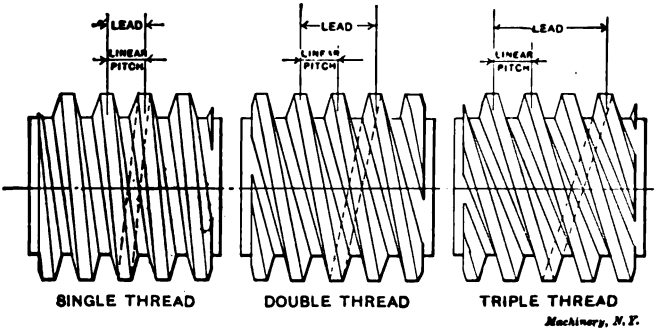

Fig. 25

then divide by the number of inches to find the number of threads in one inch, as shown in Fig. 27.

The number of threads per inch equals 1 divided by the pitch, or expressed as a formula:

$$\text{number of threads per inch} = \frac{1}{\text{pitch}}$$

The pitch of a screw equals 1 divided by the number of threads per inch, or

$$\text{pitch} = \frac{1}{\text{number of threads per inch}}$$

Thus, if the number of threads per inch equals 16, the pitch equals 1/16. If the pitch equals 0.05, the number of threads per inch equals $1 \div 0.05 = 20$. If the pitch equals 2/5 inch, the number of threads per inch equals $1 \div 2/5 = 2\frac{1}{2}$.

Confusion is often caused by indefinite designation of multiple-thread (double, triple, quadruple, etc.) screws. One way of expressing that a double-thread screw is required is to say, for instance: "3 threads per inch double," which means that the screw is cut with 3 *double* threads, or 6 threads per inch, counting the threads by a scale placed alongside of the screw, as shown in Fig. 26. The pitch of this screw

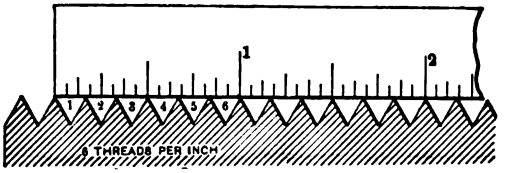

Fig. 26

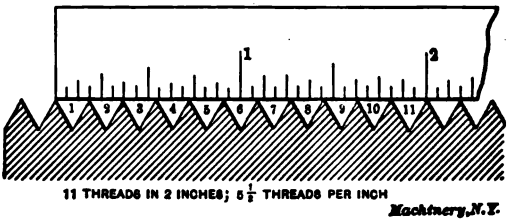

Fig. 27

thus is 1/6 inch, and the lead twice this, or 1/3 inch. To cut this screw, the lathe will be geared to cut 3 threads per inch, but the thread will be cut only to the depth required for 6 threads per inch. "Four threads per inch triple" means that there are 4 times 3, or 12 threads along one inch of the screw, when counted by a scale; the pitch of the screw is 1/12 inch, but being a triple screw, the lead of the thread is 3 times the pitch, or ¼ inch.

The best way of expressing that a multiple-thread screw is to be cut, when the lead and the pitch have been figured, is, for example: "1/4 inch lead, 1/12 inch pitch, triple thread." In the case of single-threaded screws, the number of threads per inch and the form of the thread only are given. The word "single" is not required.

There are three standard threads in common use in American shops. These are shown in Fig. 28, and are the United States standard thread, the sharp V-thread, and the Acme standard thread.

United States Standard Thread

This thread is the most commonly used thread form for all ordinary screws. The thread is provided with a small flat at the top and at the bottom of the thread, as shown in the illustration to the left in Fig. 28.

The depth of the United States (U.S.) standard thread equals 0.6495 × pitch. The width of the flat of the thread at the bottom and top equals ⅛ × pitch. The root diameter is found by subtracting two times the depth of the thread from the outside diameter of the screw.

[The root diameter of a screw thread is the diameter at the bottom of the thread, as shown in connection with the V-thread in Fig. 24.]

Standard Sharp V-Thread

This thread has no flat at the top or at the bottom, but the sides of the thread form a sharp point, as shown in the illustration, Fig. 28. The depth of the thread equals 0.866 × pitch. The root diameter is

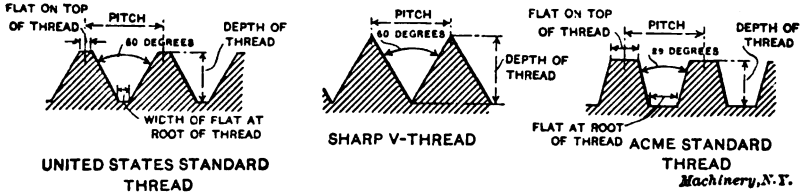

Fig. 28

found by subtracting two times the depth of the thread from the outside diameter of the screw.

Acme Standard Thread

The form of the Acme standard thread is shown to the right in Fig. 28. The depth of the thread equals ½ × pitch + 0.010 inch. The flat at the top of the thread equals 0.3707 × pitch. The width of the flat at the root of the thread equals 0.3707 × pitch — 0.0052 inch. The root diameter of the thread, of course, is found as before, by subtracting two times the depth of the thread from the outside diameter of the screw.

Tap Drill Sizes

The tap drills used for drilling holes previous to tapping are usually somewhat larger in diameter than the root diameter of the thread.

The tap drill diameter for ordinary work for the United States standard thread equals the root diameter + (⅛ × pitch).

The tap drill diameter for sharp V-thread equals the root diameter of the thread + (¼ × pitch).

The tap drill diameter for Acme standard thread equals the root diameter + 0.020 inch.

A table of double depths of threads for U. S. and sharp V-threads is given on the following page. The figures in this table opposite any given number of threads per inch are simply subtracted from the outside diameter of the screw, to obtain the root diameter.

would turn 5 times while the gear on *D* turned once, as long as the number of teeth in the gear on *D* is 5 times the number of teeth in the gear on *C*.

In order to prove this, let us assume that in Fig. 32, the gear on stud *C* has 20 teeth, and the gear on stud *D*, 100 teeth, so that consequently the stud *C* makes 5 revolutions, while stud *D* makes one.

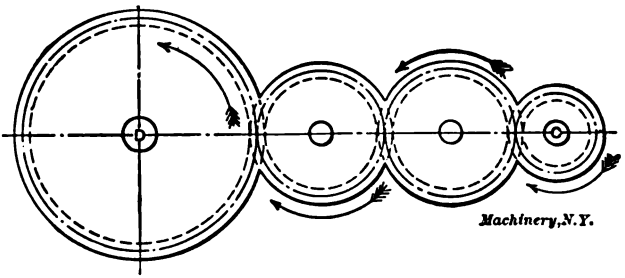

Fig. 31

The intermediate gears, *E*, *F*, and *G*, have 50, 40, and 40 teeth, respectively, as shown in the cut. Now, when the gear on *D* turns around once, the gear *G* must turn 2½ times (100/40 = 2½). The gear *F*, having the same number of teeth as gear *G*, makes one revolution while *G* makes one, and consequently also turns 2½ times while the gear on *D* turns once. The gear on *E*, having 50 teeth, turns 4/5 of a

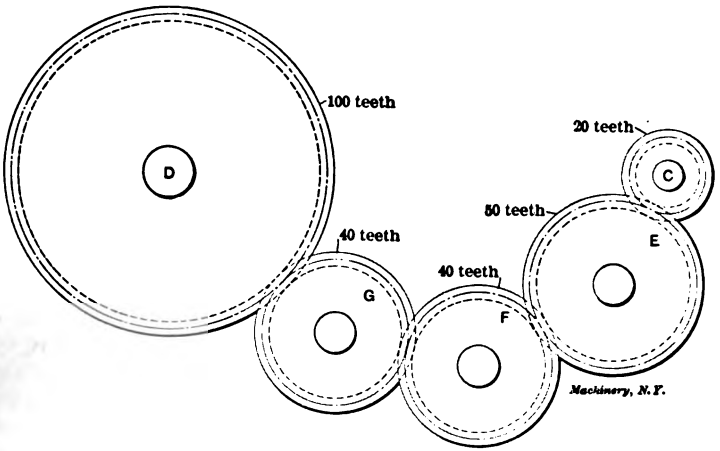

Fig. 32

revolution while gear *F* revolves once (40/50 = 4/5), and consequently, while *F* makes 2 1/2 revolutions, gear *E* makes 2 1/2 × 4/5 = 5/2 × 4/5 = 2 revolutions. Thus *E* turns twice while the gear on stud *D* revolves once. Finally, the gear on *C* turns 2 1/2 times to each revolution of gear *E* (50/20 = 2 1/2), or 5 times to 2 revolutions of *E*. But 2 revolutions of *E* correspond, as we have seen, to one revolution of

the gear on stud *D*; consequently, the gear on stud *C* makes 5 revolutions to one of the gear on stud *D*, which, as we previously said, is also the case if these two gears had been connected directly without any intermediate gearing.

The intermediate gears, however, affect the direction in which the gear on *D* revolves. In Fig. 29, when the gear on *B* revolves in a right-hand direction (in the same direction as the hands of a watch), the gear on *A*, which is driven by it, will move in a left-hand direction (in a direction opposite to that of the hands of a watch. Thus when there is no intermediate gear, the driving gear and the driven gear revolve in opposite directions. In Fig. 30, again, the gear on *C* moves in a right-hand direction, the gear on *F* in a left-hand direction, and the gear on *D* in a right-hand direction, so that in this case both the driver on *C* and the driven gear on *D* move in the same direction.

If there be two idlers, as shown in Fig. 31, the speed ratio between the shafts *C* and *D* still remains the same as before, but it will be seen from the arrows indicating the directions in which the different gears revolve, that in this case, the driver on *C* and the driven gear on *D* move in opposite directions. The use of two idlers, therefore, makes the driven gear run in the same direction as if there was no idler between the gears on *C* and *D*. If there were three idlers the gears on *C* and *D* would run in the same direction, and if there were four idlers, they would run in opposite directions, and so on.

Gears Required for a Given Speed Ratio

If we have two gears *A* and *B*, as shown in Fig. 33, and the ratio of the speed of gear *A* to the speed of gear *B* and the number of teeth in one of the gears are given, the number of teeth required in the other gear can be determined; and if the ratio only is given, the number of teeth in both the gears can be found.

Assume that the ratio of the speed of gear *A* to gear *B* is 1 to 4. This means that gear *A* revolves once while gear *B* revolves four times. If there be 80 teeth in gear *A*, gear *B* must have one-fourth of this number, or 20 teeth. Had the speed ratio been 2 to 5, then if gear *A* had 50 teeth, gear *B* would have $\frac{2}{5} \times 50 = 20$ teeth. From this we may formulate the following rule:

If the speed ratio of the driving gear to the driven gear and the number of teeth in the driving gear are given, the number of teeth in the driven gear may be found by multiplying the number of teeth in the driving gear by the speed ratio, written as a fraction.

Assume, for instance, that the speed ratio of gear *A* to gear *B* is 3 to 5, and that the number of teeth in gear *A* is 60. Writing the speed ratio as a fraction gives us 3/5, and this multiplied by 60 gives us 36, which is the number of teeth in the gear *B*.

Note that when the speed ratio of gear *A* to gear *B* is given, we multiply the number of teeth in gear *A* with the speed ratio written as a fraction, to get the number of teeth in gear *B*. But if the number of teeth in gear *B* is given, and the number of teeth in gear *A* is to

The revolutions per minute of the driven gear equals the revolutions per minute of the driving gear, times a fraction, the numerator of which is made up of the product of the numbers of teeth in the driving gears, and the denominator of the product of the numbers of teeth in the driven gears.

This rule can be written as a formula as below:

$$\text{rev. per min. of driven gear} = \text{rev. per min. of driving gear} \times \frac{\text{product of teeth in driving gears}}{\text{product of teeth in driven gears}}$$

This formula can be used whether there be one or more sets of intermediate gears.

Assume that gear *A* in Fig. 34 has 40 teeth, gear *B*, 24 teeth, gear *C*, 50 teeth, and gear *D*, 25 teeth. Then if gear *A* makes 30 revolutions

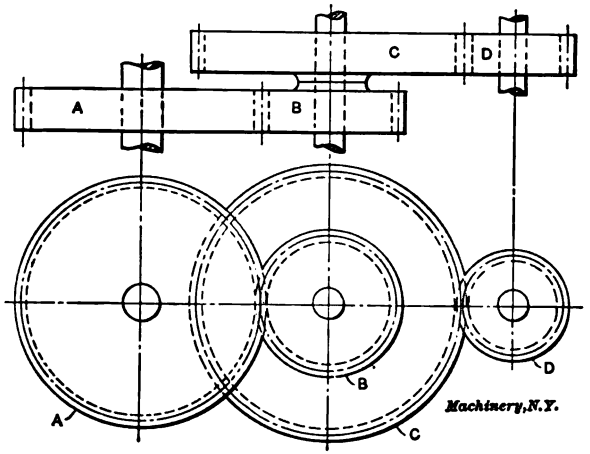

Fig. 34

per minute, how many revolutions does gear *D* make? Using the formula just given we have:

$$\text{rev. per min.} = 30 \times \frac{40 \times 50}{24 \times 25} = 100.$$

The revolutions per minute made by gear *B* may be found from the same formula by leaving out the numbers of teeth of gears *C* and *D*, thus:

$$\text{rev. per min.} = 30 \times \frac{40}{24} = 50.$$

Finding the Number of Teeth in Gears to Transmit Motion at a Given Ratio

If the numbers of revolutions of the driving gear *A* and the driven gear *D* are given, the numbers of teeth required in the four gears of a compound gearing that will transmit motion at the required ratio, can be found.

Assume that gear *A*, Fig. 34, makes 36 revolutions per minute and that it is required that gear *D* should make 56 revolutions. The speed ratio is then $\frac{36}{56} = \frac{9}{14}$. (See page 29.)

To find the gears required, write the ratio of the speed of the driving gear to the driven gear as a fraction, divide the numerator and denominator in two factors, and multiply each "pair" of factors by the same number until gears with suitable numbers of teeth are found. (One factor in the numerator and one in the denominator make "one pair.") In this example

$$\frac{9}{14} = \frac{3 \times 3}{2 \times 7} = \frac{(3 \times 20) \times (3 \times 10)}{(2 \times 20) \times (7 \times 10)} = \frac{60 \times 30}{40 \times 70}$$

The gears in the numerator, with 60 and 30 teeth, are the driven gears (gears *B* and *D*, Fig. 34), and the gears in the denominator, with 40 and 70 teeth, are the driving gears (gears *A* and *C*, Fig. 34).

The calculation may be expressed in a formula as follows:

$$\text{ratio of speed of the first driving gear to the last driven gear} = \frac{\text{product of teeth in driven gears}}{\text{product of teeth in driving gears}}$$

CHAPTER VI

LATHE CHANGE GEARING

While the principles and rules governing the calculation of change gears are very simple, they, of course, presuppose some fundamental knowledge of the use of common fractions. If such knowledge is at hand, the subject of figuring change gears, if once thoroughly understood, can hardly ever be forgotten. It should be impressed upon the minds of all who have found difficulties with this subject that the matter is seldom approached in a logical manner, and is usually grasped by the memory rather than by the intellect.

When cutting threads in the lathe, the lathe carriage is moved along the bed by means of the lead-screw a certain distance while the work revolves a certain number of times. If the work revolves 12 times while the carriage moves one inch along the bed of the lathe, 12 threads per inch will be cut on the work.

Change gears are used for transmitting the motion from the spindle (which revolves the work) to the lead-screw (which causes the carriage to move along the bed). The number of times that the spindle will revolve while the carriage moves one inch along the lathe bed is determined by the ratio of the change gears. By employing different ratios of change gearing, therefore, different numbers of threads per inch can be cut.

The change gearing may be either *simple* or *compound*. Simple gearing is shown in the accompanying illustration, Fig. 35. When simple gearing is used it is always necessary to use an idler between the gear on the spindle stud and the gear on the lead-screw. As already explained, this idler has no influence on the ratio of the gearing, and can have any number of teeth. Compound change gearing is shown in Fig. 36.

Finding the Lathe Screw Constant

In order to be able to calculate change gears for the lathe, it is necessary first to find the "lathe screw constant." This constant is always the same for each particular lathe, but it may be different for lathes of different sizes or makes.

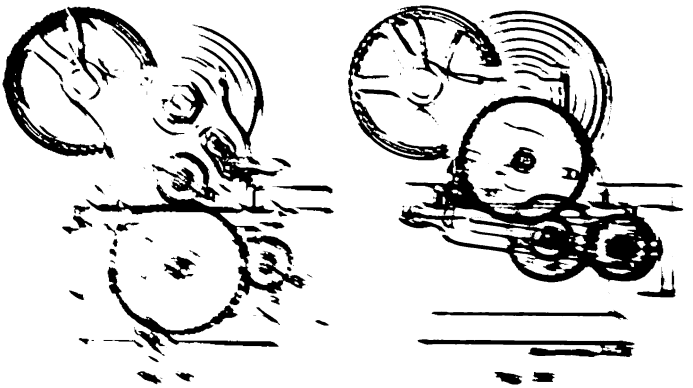

denominator the number of teeth in the gear on the lead-screw. This rule can be more easily remembered if written as a formula:

$$\frac{\text{lathe screw constant}}{\text{threads per inch to be cut}} = \frac{\text{teeth in gear on spindle stud}}{\text{teeth in gear on lead-screw}}$$

Assume that 10 threads per inch are to be cut in a lathe where we have found that the lathe screw constant is 6. Also assume that the numbers of teeth in the available change gears of this lathe are 24, 28, 32, 36, 40, etc., increasing by 4 up to 100. By substituting the figures given, in the formula above, and carrying out the calculation, we have:

$$\frac{6}{10} = \frac{6 \times 4}{10 \times 4} = \frac{24}{40}.$$

By multiplying both numerator and denominator by 4 we obtain two available gears with 24 and 40 teeth, respectively. The 24-tooth gear goes on the spindle stud, and the 40-tooth gear on the lead-screw. It will be seen that if we had multiplied 6 and 10 by 5, we would have obtained 30 and 50 teeth, which gears are not available in our set of gears with this lathe. Until getting accustomed to figuring of this kind, one can find, by trial only, the correct number by which to multiply the numerator and denominator. The trials must be kept up until both gears have such a number of teeth that they are to be found in the set of change gears accompanying the lathe.

Assume that it is required to cut 11½ threads per inch in the same lathe having the same set of change gears. Then

$$\frac{6}{11\frac{1}{2}} = \frac{6 \times 8}{11\frac{1}{2} \times 8} = \frac{48}{92}.$$

It will be found that multiplying by any other number than 8 would not, in this case, give numbers of teeth that could be found in the gears with the lathe. [In order to prevent mistakes, be sure to note that the lathe screw constant differs for different makes and sizes of lathes and must be determined for each particular lathe.]

Compound Gearing

Sometimes it is not possible to obtain gears that will give the required ratio for the thread to be cut in a simple train, and then compound gearing must be employed. The method for finding the number of teeth in the gears in compound gearing is exactly the same as for simple gearing, except that we divide both numerator and denominator of the fraction giving the ratio of screw constant to threads per inch to be cut, into two factors, and then multiply each "pair" of factors by the same number, in order to obtain the change gears. (One factor in the numerator and one in the denominator make one pair.)

Assume that the lathe screw constant is 6, that the numbers of teeth in the available gears are 30, 35, 40, 45, 50, 55, etc., increasing by 5 up to 100. Assume that it is required to cut 24 threads per inch. We have then,

$$\frac{6}{24} = \text{ratio}.$$

By dividing numerator and denominator of the ratio into two factors and multiplying each pair of factors by the same number, as shown below, we find the gears:

$$\frac{6}{24}=\frac{2\times 3}{4\times 6}=\frac{(2\times 20)\times(3\times 10)}{(4\times 20)\times(6\times 10)}=\frac{40\times 30}{80\times 60}.$$

The four numbers in the last fraction give the numbers of teeth in the gears which should be used. The gears in the numerator, with 40 and 30 teeth, are the driving gears, and those in the denominator, with 80 and 60 teeth, are the driven gears. Driving gears are, of course, the gear *D*, Fig. 36, on the spindle stud, and the gear *P* on the intermediate stud *K*, meshing with the lead-screw gear. Driven gears are the lead-screw gear, *E*, and the gear *N* on the intermediate stud meshing with the spindle stud gear. Either of the driving gears may be placed on the spindle stud, and either of the driven on the lead-screw.

Assume that 1¾ threads per inch are to be cut in a lathe with a screw constant 6, and that the gears available have 24, 28, 32, 36, 40 teeth, etc., increasing by 4 up to 100. Proceeding as before we have:

$$\frac{6}{1\frac{3}{4}}=\frac{2\times 3}{1\times 1\frac{3}{4}}=\frac{(2\times 36)\times(3\times 16)}{(1\times 36)\times(1\frac{3}{4}\times 16)}=\frac{72\times 48}{36\times 28}.$$

This is the case directly illustrated in Fig. 36. The gear with 72 teeth is placed on the spindle stud *J*, the one with 48 on the intermediate stud *K*, meshing with the lead-screw gear. These two gears (72- and 48-teeth) are the *driving* gears. The gears with 36 and 28 teeth are placed on the lead-screw, and on the intermediate stud, as shown, and are the *driven* gears.

The rule for compound change gears, given as a formula, is as follows:

$$\frac{\text{lathe screw constant}}{\text{threads per inch to be cut}}=\frac{\text{product of teeth in driving gears}}{\text{product of teeth in driven gears}}$$

Fractional Threads

Sometimes the lead of a thread is given as a fraction of an inch instead of stating the number of threads per inch. For instance, a thread may be required to be cut, having ⅜ inch lead. In this case the expression "⅜ inch lead" should first be transformed to "number of threads per inch," after which we can proceed to find the change gears as explained on the previous pages. How to find the number of threads per inch when the lead is given is explained in Chapter IV. The number of threads (the thread being single) equals:

$$\text{number of threads per inch}=\frac{1}{\frac{3}{8}}=1\div\frac{3}{8}=\frac{8}{3}=2\frac{2}{3}.$$

To find the change gears to cut 2 2/3 threads per inch in a lathe having a screw constant 8 and change gears running from 24 to 100 teeth, increasing by 4, proceed as below:

$$\frac{8}{2\ 2/3}=\frac{2\times 4}{1\times 2\ 2/3}=\frac{(2\times 36)\times(4\times 24)}{(1\times 36)\times(2\ 2/3\times 24)}=\frac{72\times 96}{36\times 64}.$$

CHAPTER VII

SPEED OF PULLEYS

The principle applied to gearing in regard to the ratio between the speeds of two shafts, may be directly applied to the question of sizes of pulleys, with the only difference that we here deal with the number of inches to the diameter of the pulley instead of the number of teeth in the gear.

Assume that a shaft is required to make 300 revolutions per minute, and that it is driven from a line-shaft making 180 revolutions per minute, as shown in the illustration below. The pulley on the line-shaft is in place, and is 15 inches in diameter. What diameter should the pulley on the shaft making 300 revolutions per minute be made? As the belt on the two pulleys runs at the same speed as the periphery (circumference) of either of the pulleys, it is clear that the peri-

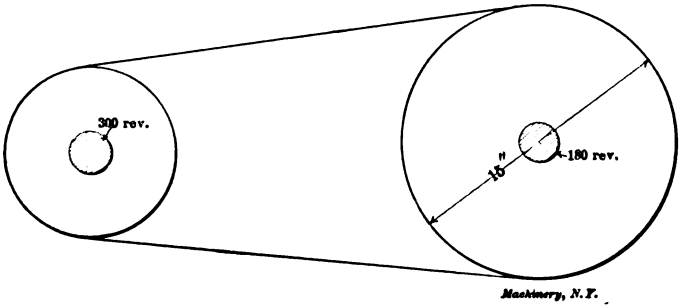

Fig. 37

pheries of both pulleys run at the same speed, providing there is no slippage between the belt and the pulleys. The pulley running a smaller number of revolutions must, of course, be larger in order that its periphery may run at the same speed as the periphery of the pulley making a greater number of revolutions. The circumference of a circle (and, therefore, also the circumference of a pulley) equals the diameter $\times$ 3.1416. Therefore, the circumference of the pulley making 180 revolutions and having a diameter of 15 inches, passes, in one minute, through a distance equal to 180 times its circumference, or $180 \times 15 \times 3.1416$.

The circumference of the pulley making 300 revolutions must pass through the same distance in one minute; therefore, for *each* revolution this pulley must pass through the distance $180 \times 15 \times 3.1416$ divided by 300. This, then, would equal the circumference of the smaller pulley; but the circumference also equals the *diameter* $\times$ 3.1416. We can therefore write

$$\frac{180 \times 15 \times 3.1416}{300} = \text{diameter of smaller pulley} \times 3.1416$$

shown the end of the table feed-screw, and *B* is a gear placed on this feed-screw. This gear is commonly called the feed-screw gear, and it imparts motion, through an intermediate gear *H*, to the gear *C* which is placed on the stud *D;* from this stud, in turn, motion is imparted by gearing to the worm of the index head and from the worm to the worm-wheel mounted on the index head spindle. Thus, when connected by gearing in this manner, the index head spindle may be rotated from the feed-screw. The gear *C* on the stud *D* is called the "worm gear"; this worm gear should not be confused with the worm-wheel which is permanently attached to the index head spindle.

In Fig. 38 is shown a case of simple gearing, while in Fig. 39 the gears are compounded. In this case *B* still represents the feed-screw gear, while *E* is the gear on the intermediate stud which meshes with *B*, and *F* is the second gear on the same intermediate stud, meshing with gear *C*. The object of the calculation is to find the numbers of teeth in gears *B* and *C* used in a simple train, as in Fig. 38; or in the gears *B*, *E*, *F* and *C* as used in a compound train of gears, as shown in Fig. 39.

The Lead of a Milling Machine

If gears with an equal number of teeth are placed on the feed-screw *A* and the stud *D* in Fig. 38, then the *lead of the milling machine* is the distance the table will travel while the index spindle makes one complete revolution. This distance is a constant used in figuring the change gears, and may vary for different milling machines.

The lead of a helix or spiral is the distance, measured along the axis of the work, in which the spiral makes one full turn around the work. The lead of the milling machine may, therefore, also be expressed as the lead of the spiral that will be cut when gears with an equal number of teeth are placed on studs *A* and *D*, and an idler of suitable size interposed between the gears.

To find the lead of a milling machine, place equal gears on stud D, and on feed-screw A, Fig. 38, and multiply the number of revolutions made by the feed-screw to produce one revolution of the index head spindle, by the lead of the thread on the feed-screw.

We can express the rule given as a formula:

$$\text{lead of milling machine} = \text{rev. of feed-screw for one revolution of index spindle with equal gears} \times \text{lead of feed-screw}$$

Assume that it is necessary to make 40 revolutions of the feed-screw to turn the index head spindle one complete revolution, when the gears *B* and *C*, Fig. 38, are equal, and that the lead of the thread on the feed-screw of the milling machine is ¼ inch; then the lead of the machine equals

$$40 \times \tfrac{1}{4} \text{ inch} = 10 \text{ inches.}$$

Change Gears for Cutting Spirals

As has already been stated, the lead of the machine means the distance which the table of the milling machine moves forward in order to turn the work placed on the index head spindle one complete revo-

lution when change gears with an equal number of teeth are used. If then, for instance, a spiral is to be cut, the lead of which is twice as long as the lead of the machine, change gears of such a ratio must be used that the index head spindle will turn only one-half a revolution while the table moves forward a distance equal to the lead of the machine.

Assume that we want to cut a spiral having a lead of 20 inches, that is, making one complete turn in a length of 20 inches, and that the lead of the milling machine is 10 inches. Then the ratio between the

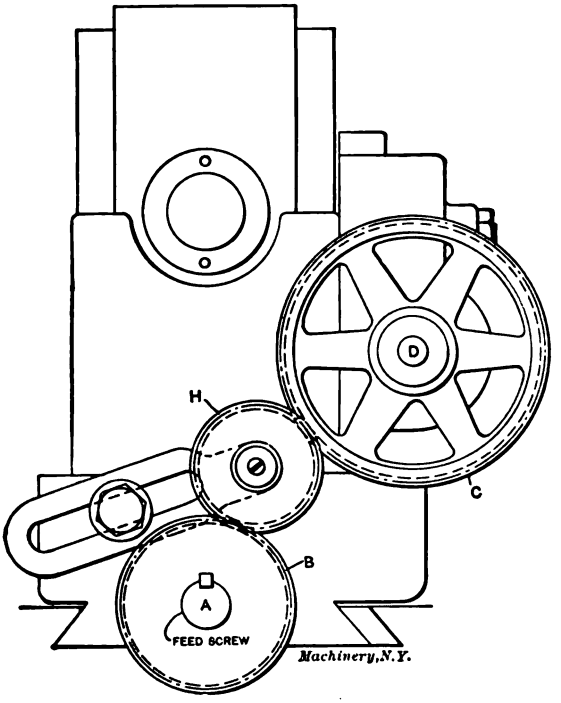

Fig. 38

speeds of the feed-screw and of stud *D* must be 2 to 1, which means that the feed-screw, which is required to turn twice while stud *D* turns once, must have a gear that has only one-half the number of teeth of the gear placed on stud *D*. (See Chapter V.) If the lead of the machine is 10 inches and the lead of the spiral required to be cut on a piece of work is 30 inches, then the ratio between the speed of the gears would be 3 to 1, which is the same as the ratio between the lead of the spiral to be cut to the lead of the machine. (30 to 10 = 3 to 1, or as it is commonly written 30 : 10 = 3 : 1.)

The rule for finding the change gears can be expressed by a simple formula:

CHAPTER IX

MILLING MACHINE INDEXING

The figuring of indexing movements for the dividing head of the milling machine is a subject which many mechanics think complicated, although it is really very simple. Assume that a bolt having a round head as shown in Fig. 40 is required to be milled so that the head becomes hexagonal, that is, so that it has six equal sides, as shown in Fig. 41. The index head is used for holding the work and for turning or indexing it the required amount for milling each of the six flat surfaces in turn. The index head is constructed with a worm and worm-wheel mechanism, the worm being on the crank turned when indexing, and the worm-wheel being mounted on the index spindle to which the work is attached. By moving the crank with its index pin a certain number of holes in one of the index circles, a certain angular movement can be imparted to the work. The calculating of indexing movements for the milling machine consists in finding how much the

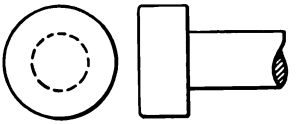

Fig. 40

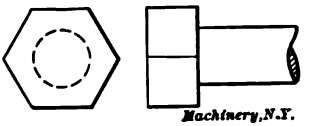

Fig. 41

index crank requires to be turned in order to produce the required movement for indexing the work.

Calculating the Indexing Movement

Most of the regularly manufactured index heads use a single threaded worm engaging with a worm-wheel having 40 teeth. Thus, when the index crank is turned around one full revolution, the worm is also revolved one complete turn, and this moves the worm-wheel one tooth, or 1/40 of its circumference. Therefore, in order to turn the worm-wheel and the index spindle on which it is mounted one full revolution, it is necessary to turn the index crank 40 revolutions. If we want to revolve the index spindle one-half revolution, we would have to turn the index crank 20 revolutions. If we want to turn the index spindle only one-fourth of a revolution, we turn the index crank 10 revolutions.

Suppose that we want to mill the hexagonal head of the bolt shown in Fig. 41. As it requires 40 revolutions of the index crank to revolve the index spindle once, it evidently requires only 1/6 of that number to turn the index spindle 1/6 revolution; this is the amount that the work should be turned around or indexed when one side of the hexagon has been milled, and we are ready to mill the next. Consequently, the index crank should be turned around $\frac{40}{6} = 6\ 2/3$ revolutions for milling

a hexagon; that is, we first turn the crank 6 full revolutions and then by means of the index plate we turn it 2/3 of a revolution. If we use the circle in the index plate having 18 holes, 2/3 of a revolution will mean 12 holes in this circle, as 12 is two-thirds of 18 ($12 = 2/3 \times 18$).

Assume that a piece of work has eight sides regularly spaced (regular octagon). The indexing for each side is found by dividing 40 by 8. Thus $\frac{40}{8} = 5$, represents the number of revolutions of the index crank for each side indexed and milled.

Assume that it is required to cut nine flutes regularly spaced in a reamer. The index crank must be turned $\frac{40}{9} = 4\ 4/9$ revolutions in order to index for each flute. The 4/9 of a revolution would correspond to eight holes in the 18-hole circle, because $\frac{8}{18} = \frac{4}{9}$.

Assume that it is required to cut 85 teeth in a spur gear. The index crank must be revolved $\frac{40}{85} = \frac{8}{17}$ revolutions to index for each tooth. To move the index crank $\frac{8}{17}$ of a revolution corresponds to moving it 8 holes in the 17-hole circle.

As a general rule, for finding the number of revolutions required for indexing for any regular spacing, with any index head, the following rule may be used: *To find the number of revolutions of the index crank for indexing, divide the number of turns required of the index crank for one revolution of the index head spindle by the number of divisions required in the work.*

[Most standard index heads are provided with an index plate fastened directly to the index spindle for rapid direct indexing. This index plate is usually provided with 24 holes, so that 2, 3, 4, 6, 8, 12 and 24 divisions can be obtained directly by the use of this direct index plate without using the regular indexing mechanism. When using this index plate for rapid direct indexing, no calculations are required, as the number of divisions obtainable by the use of the different holes in this plate are, as a rule, marked directly at the respective holes.]

Finding the Index Circle to Use

In order to find which index circle to use and how many holes in that index circle to move for a certain fractional turn of the index crank, the numerator and denominator of the fraction expressing the fractional turn are multiplied by the same number until the denominator of the new fraction equals the number of holes in some one index circle. The number with which to multiply must be found by trial. The numerator of the new fraction then expresses how many holes the crank is to be moved in the circle expressed by the denominator.

Assume that 12 flutes are to be milled in a large tap. Assume that 40 turns of the index crank are required for one turn of the index

Indexing for Angles

In Fig. 54 is shown a piece of round stock having two flats milled in such a way that the angle between two lines from the center at right angles to the two surfaces is 35 degrees. In this case the index head cannot be turned so as to make a certain whole number of moves in one complete revolution of the work, as is done, for instance, when we make four moves in one revolution for milling a square, six moves

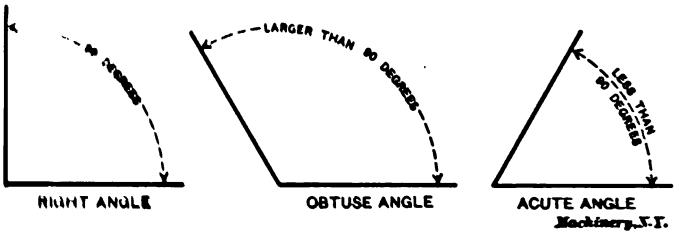

Fig. 46 Fig. 47 Fig. 48

in one revolution for milling a hexagon, and 80 moves for milling an 80-tooth gear. Instead, we have here given a certain number of degrees which it is required that the work be turned before another cut is taken by the milling cutter.

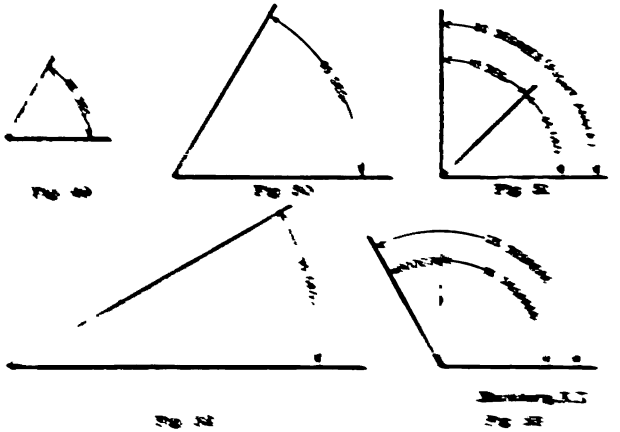

Fig. 49 Fig. 50 Fig. 51

Fig. 52 Fig. 53

work, one turn of the index crank must equal $\frac{360}{40} = 9$ degrees. Then, when one complete turn of the index crank equals 9 degrees, two holes in the 18-hole circle, or 3 holes in the 27-hole circle, must correspond to one degree. ($\frac{3}{27} = \frac{2}{18} = \frac{1}{9}$.) The first principle or rule for indexing for angles is therefore that two holes in the 18-hole circle or 3 holes in the 27-hole circle equals a movement of one degree of the index head spindle and the work.

Assume that an indexing movement of 35 degrees is required as shown in Fig. 54. One complete turn of the index crank equals 9 degrees; we, therefore, first divide the number of degrees for which we wish to index, by 9, in order to find how many complete turns the

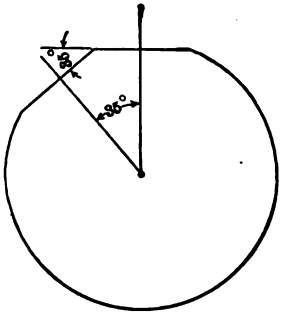

Fig. 54

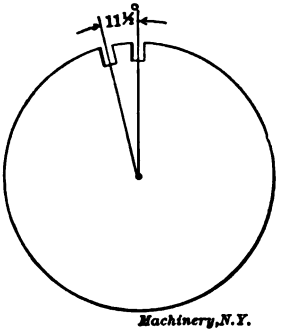

Fig. 55

index crank should make. The number of degrees left to turn when we have completed the full turns are indexed by taking two holes in the 18-hole circle for each degree. In the case in Fig. 54, $\frac{35}{9} = 3\frac{8}{9}$, which indicates that the index crank must be turned three revolutions, and then we must index for 8 degrees more or move 16 holes in the 18-hole circle.

Assume that we wish to index 11½ degrees, as shown in Fig. 55. Two holes in the 18-hole circle represent one degree, and consequently one hole represents ½ degree. To index for 11½ degrees we first turn the index crank one revolution, this being a 9-degree movement. Then to index 2½ degrees we must move the index crank 5 holes in the 18-hole circle (4 holes for the two whole degrees and one hole for the ½ degree equals the total movement of 5 holes).

Below is shown how this calculation may be carried out to plainly indicate the motion required for this angle:

11½ deg. = 9 deg. + 2 deg. + ½ deg.

1 turn + 4 holes + 1 hole in the 18-hole circle.

Should it be required to index only 1/3 degree, this may be made by using the 27-hole circle. In this circle a three-hole movement equals one degree, and a one-hole movement in that circle thus equals 1/3

degree, or 20 minutes. Assume that it is required to index the work through an angle of 48 degrees 40 minutes. First turn the crank 5 turns for 45 degrees ($5 \times 9 = 45$). Then there are 3 degrees 40 minutes or 3 2/3 degrees left. In the 27-hole circle a three-degree movement corresponds to 9 holes, and a 2/3-degree movement to 2 holes, making a total movement of 11 holes in the 27-hole circle, to complete the crank movement for 48 degrees 40 minutes. Below is plainly shown how this calculation may be carried out:

48 deg. 40 min. = 45 deg. + 3 deg. + 40 min.

5 turns + 9 holes + 2 holes in the 27-hole circle.

Approximate Indexing for Angles

By using the 18- and 27-hole circles, only whole degrees and 1/3, 1/2, and 2/3 of a degree (20, 30, and 40 minutes) can be indexed. Assume, however, that it is required to index for 16 minutes. One whole turn of the index crank equals 9 degrees or 540 minutes ($9 \times 60 = 540$). To index for 16 minutes, therefore, requires about 1/34 of a turn of the index crank ($540 \div 16 = 34$, nearly). In this case, therefore, we use an index circle having the nearest number of holes to 34, or the index circle with 33 holes. A one-hole movement in this circle would approximate the required movement of 16 minutes.

Assume that it is required to index for 55 minutes. We then have $540 \div 55 = 10$, nearly. In this case there is no index circle with 10 or approximately 10 holes, but as there is an index circle with 20 holes, this circle will be used, and the index crank is moved two holes in that circle instead of one.

Assume that it is required to index for 2 degrees 46 minutes. If we change this to minutes we have 2 degrees $= 2 \times 60 = 120$ minutes, and 46 minutes added to this gives us a total of 166 minutes. Dividing 540 by 166 we have: $540 \div 166 = 3.253$.

Now we multiply this quotient (3.253) by some whole number, so that we obtain a product which equals the number of holes in any one index circle. The number by which to multiply must be found by trial. In this case we can multiply by 12, obtaining as a product $3.253 \times 12 = 39.036$. For indexing 2 degrees and 46 minutes we can, therefore, use the 39-hole circle, moving the index crank 12 holes.

The following is a general rule for *approximate* indexing of angles, for any index head where 40 revolutions of the index crank are required for one revolution of the work:

Divide 540 *by the total number of minutes to be indexed. If the quotient is approximately equal to the number of holes in any index circle, the angular movement is obtained by moving one hole in this index circle. If the quotient does not approximately equal the number of holes in any index circle, find by trial a number by which the quotient can be multiplied so that the product equals the number of holes in an available index circle; in this circle, move the index crank as many holes as indicated by the number by which the quotient has been multiplied.* (If the quotient of 540 divided by the total number of minutes is greater than the number of holes in any of the index circles, the movement cannot be obtained by simple indexing.)

No. 39. Fans, Ventilation and Heating.—Fans; Heaters; Shop Heating.

No. 40. Fly-Wheels.—Their Purpose, Calculation and Design.

No. 41. Jigs and Fixtures, Part I.—Principles of Jig and Fixture Design; Drill and Boring Jig Bushings; Locating Points; Clamping Devices.

No. 42. Jigs and Fixtures, Part II.—Open and Closed Drill Jigs.

No. 43. Jigs and Fixtures, Part III.—Boring and Milling Fixtures.

No. 44. Machine Blacksmithing.—Systems, Tools and Machines used.

No. 45. Drop Forging.—Lay-out of Plant; Methods of Drop Forging; Dies.

No. 46. Hardening and Tempering.—Hardening Plants; Treating High-Speed Steel; Hardening Gages; Hardening Kinks.

No. 47. Electric Overhead Cranes.—Design and Calculation.

No. 48. Files and Filing.—Types of Files; Using and Making Files.

No. 49. Girders for Electric Overhead Cranes.

No. 50. Principles and Practice of Assembling Machine Tools, Part I.

No. 51. Principles and Practice of Assembling Machine Tools, Part II.

No. 52. Advanced Shop Arithmetic for the Machinist.

No. 53. Use of Logarithms and Logarithmic Tables.

No. 54. Solution of Triangles, Part I.—Methods, Rules and Examples.

No. 55. Solution of Triangles, Part II.—Tables of Natural Functions.

No. 56. Ball Bearings.—Principles of Design and Construction.

No. 57. Metal Spinning.—Machines, Tools and Methods Used.

No. 58. Helical and Elliptic Springs.—Calculation and Design.

No. 59. Machines, Tools and Methods of Automobile Manufacture.

No. 60. Construction and Manufacture of Automobiles.

No. 61. Blacksmith Shop Practice.—Model Blacksmith Shop; Welding; Forging of Hooks and Chains; Miscellaneous Appliances and Methods.

No. 62. Hardness and Durability Testing of Metals.

No. 63. Heat Treatment of Steel.—Hardening, Tempering and Case-Hardening.

No. 64. Gage Making and Lapping.

No. 65. Formulas and Constants for Gas Engine Design.

No. 66. Heating and Ventilation of Shops and Offices.

No. 67. Boilers.

No. 68. Boiler Furnaces and Chimneys.

No. 69. Feed Water Appliances.

No. 70. Steam Engines.

No. 71. Steam Turbines.

No. 72. Pumps, Condensers, Steam and Water Piping.

THE FOLLOWING TITLES ARE PREPARED, AND WILL BE BROUGHT OUT IN 1911

No. 73. Principles and Applications of Electricity, Part I.—Static Electricity; Electrical Measurements; Batteries.

No. 74. Principles and Applications of Electricity, Part II.—Magnetism; Electro-Magnetism; Electro-Plating.

No. 75. Principles and Applications of Electricity, Part III.—Dynamos; Motors; Electric Railways.

No. 76. Principles and Applications of Electricity, Part IV.—Electric Lighting.

No. 77. Principles and Applications of Electricity, Part V.—Telegraph and Telephone.

No. 78. Principles and Applications of Electricity, Part VI.—Transmission of Power.

No. 79. Locomotive Building, Part I.—Main and Side Rods.

No. 80. Locomotive Building, Part II.—Wheels; Axles; Driving Boxes.

No. 81. Locomotive Building, Part III.—Cylinders and Frames.

No. 82. Locomotive Building, Part IV.—Valve Motion and Miscellaneous Details.

No. 83. Locomotive Building, Part V.—Boiler Shop Practice.

No. 84. Locomotive Building, Part VI.—Erecting.

No. 85. Mechanical Drawing, Part I.—Instruments; Materials; Geometrical Problems.

No. 86. Mechanical Drawing, Part II.—Projection.

No. 87. Mechanical Drawing, Part III.—Machine Details.

No. 88. Mechanical Drawing, Part IV.—Machine Details.

No. 89. The Theory of Shrinkage and Forced Fits.

No. 90. Railway Repair Shop Practice.

MACHINERY'S DATA SHEET SERIES

MACHINERY'S Data Sheet Books include the well-known series of Data Sheets originated by MACHINERY, and issued monthly as supplements to the publication; of these Data Sheets over 500 have been published, and 6,000,000 copies sold. Revised and greatly amplified, they are now presented in book form, kindred subjects being grouped together. The purchaser may secure either the books on those subjects in which he is specially interested, or, if he pleases, the whole set at one time. The price is 25 cents a book.

TITLES AND CONTENTS ON BACK COVER

CONTENTS OF DATA SHEET BOOKS

No. 1. Screw Threads.—United States, Whitworth, Sharp V- and British Association Standard Threads; Briggs Pipe Thread; Oil Well Casing Gages; Fire Hose Connections; Acme Thread; Worm Threads; Metric Threads; Machine, Wood, and Lag Screw Threads; Carriage Bolt Threads, etc.

No. 2. Screws, Bolts and Nuts.—Fillister-head, Square-head, Headless, Collar-head and Hexagon-head Screws; Standard and Special Nuts; T-nuts, T-bolts and Washers; Thumb Screws and Nuts; A. L. A. M. Standard Screws and Nuts; Machine Screw Heads; Wood Screws; Tap Drills; Lock Nuts; Eye-bolts, etc.

No. 3. Taps and Dies.—Hand, Machine, Tapper and Machine Screw Taps; Taper Die Taps; Sellers Hobs; Screw Machine Taps; Straight and Taper Boiler Taps; Stay-bolt, Washout, and Patch-bolt Taps; Pipe Taps and Hobs; Solid Square, Round Adjustable and Spring Screw Threading Dies.

No. 4. Reamers, Sockets, Drills and Milling Cutters.—Hand Reamers; Shell Reamers and Arbors; Pipe Reamers; Taper Pins and Reamers; Brown & Sharpe, Morse and Jarno Taper Sockets and Reamers; Drills; Wire Gages; Milling Cutters; Setting Angles for Milling Teeth in End Mills and Angular Cutters, etc.

No. 5. Spur Gearing.—Diametral and Circular Pitch; Dimensions of Spur Gears; Tables of Pitch Diameters; Odontograph Tables; Rolling Mill Gearing; Strength of Spur Gears; Horsepower Transmitted by Cast-iron and Rawhide Pinions; Design of Spur Gears; Weight of Cast-iron Gears; Epicyclic Gearing.

No. 6. Bevel, Spiral and Worm Gearing.—Rules and Formulas for Bevel Gears; Strength of Bevel Gears; Design of Bevel Gears; Rules and Formulas for Spiral Gearing; Tables Facilitating Calculations; Diagram for Cutters for Spiral Gears; Rules and Formulas for Worm Gearing, etc.

No. 7. Shafting, Keys and Keyways.—Horsepower of Shafting; Diagrams and Tables for the Strength of Shafting; Forcing, Driving, Shrinking and Running Fits; Woodruff Keys; United States Navy Standard Keys; Gib Keys; Milling Keyways; Duplex Keys.

No. 8. Bearings, Couplings, Clutches, Crane Chain and Hooks.—Pillow Blocks; Babbitted Bearings; Ball and Roller Bearings; Clamp Couplings; Plate Couplings; Flange Couplings; Tooth Clutches; Crab Couplings; Cone Clutches; Universal Joints; Crane Chain; Chain Friction; Crane Hooks; Drum Scores.

No. 9. Springs, Slides and Machine Details.—Formulas and Tables for Spring Calculations; Machine Slides; Machine Handles and Levers; Collars; Hand Wheels; Pins and Cotters; Turn-buckles, etc.

No. 10. Motor Drive, Speeds and Feeds, Change Gearing, and Boring Bars.—Power required for Machine Tools; Cutting Speeds and Feeds for Carbon and High-speed Steel; Screw Machine Speeds and Feeds; Heat Treatment of High-speed Steel Tools; Taper Turning; Change Gearing for the Lathe; Boring Bars and Tools, etc.

No. 11. Milling Machine Indexing, Clamping Devices and Planer Jacks.—Tables for Milling Machine Indexing; Change Gears for Milling Spirals; Angles for setting Indexing Head when Milling Clutches; Jig Clamping Devices; Straps and Clamps; Planer Jacks.

No. 12. Pipe and Pipe Fittings.—Pipe Threads and Gages; Cast-iron Fittings; Bronze Fittings; Pipe Flanges; Pipe Bends; Pipe Clamps and Hangers; Dimensions of Pipe for Various Services, etc.

No. 13. Boilers and Chimneys.—Flue Spacing and Bracing for Boilers; Strength of Boiler Joints; Riveting; Boiler Setting; Chimneys.

No. 14. Locomotive and Railway Data.—Locomotive Boilers; Bearing Pressures for Locomotive Journals; Locomotive Classifications; Rail Sections; Frogs, Switches and Cross-overs; Tires; Tractive Force; Inertia of Trains; Brake Levers; Brake Rods, etc.

No. 15. Steam and Gas Engines.—Saturated Steam; Steam Pipe Sizes; Steam Engine Design; Volume of Cylinders; Stuffing Boxes; Setting Corliss Engine Valve Gears; Condenser and Air Pump Data; Horsepower of Gasoline Engines; Automobile Engine Crankshafts, etc.

No. 16. Mathematical Tables.—Squares of Mixed Numbers; Functions of Fractions; Circumference and Diameters of Circles; Tables for Spacing off Circles; Solution of Triangles; Formulas for Solving Regular Polygons; Geometrical Progression, etc.

No. 17. Mechanics and Strength of Materials.—Work; Energy; Centrifugal Force; Center of Gravity; Motion; Friction; Pendulum; Falling Bodies; Strength of Materials; Strength of Flat Plates; Ratio of Outside and Inside Radii of Thick Cylinders, etc.

No. 18. Beam Formulas and Structural Design.—Beam Formulas; Sectional Moduli of Structural Shapes; Beam Charts; Net Areas of Structural Angles; Rivet Spacing; Splices for Channels and I-beams; Stresses in Roof Trusses, etc.

No. 19. Belt, Rope and Chain Drives.—Dimensions of Pulleys; Weights of Pulleys; Horsepower of Belting; Belt Velocity; Angular Belt Drives; Horsepower transmitted by Ropes; Sheaves for Rope Drive; Bending Stresses in Wire Ropes; Sprockets for Link Chains; Formulas and Tables for Various Classes of Driving Chain.

No. 20. Wiring Diagrams, Heating and Ventilation, and Miscellaneous Tables.—Typical Motor Wiring Diagrams; Resistance of Round Copper Wire; Rubber Covered Cables; Current Densities for Various Contacts and Materials; Centrifugal Fan and Blower Capacities; Hot Water Main Capacities; Miscellaneous Tables; Decimal Equivalents, Metric Conversion Tables, Weights and Specific Gravity of Metals, Weights of Fillets, Drafting-room Conventions, etc.

MACHINERY, the monthly mechanical journal, originator of the Reference and Data Sheet Series, is published in four editions—the *Shop Edition*, $1.00 a year; the *Engineering Edition*, $2.00 a year; the *Railway Edition*, $2.00 a year, and the *Foreign Edition*, $3.00 a year.

The Industrial Press, Publishers of MACHINERY,
49-55 Lafayette Street, New York City, U. S. A.

PRICE 25 CENTS

USE OF FORMULAS IN MECHANICS

APPLICATIONS TO ENGINEERING PROBLEMS LEVERS—STRENGTH OF BEAMS

THIRD REVISED EDITION

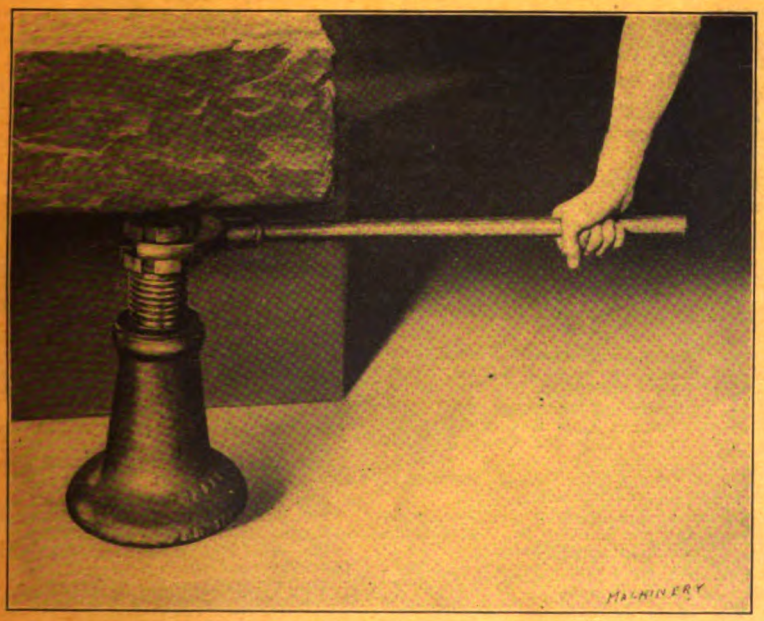

MACHINERY'S REFERENCE BOOK NO. 19
PUBLISHED BY MACHINERY, NEW YORK

Students whose knowledge of elementary arithmetic and its application to simple problems is too limited for intelligent study of this treatise, are advised to first study MACHINERY'S Jig Sheets 5A to 15A, inclusive, Common Fractions and Decimals; MACHINERY'S Reference Series No. 18, Shop Arithmetic for the Machinist; and No. 52, Advanced Shop Arithmetic for the Machinist.

In preparing the second edition of this book, the chapter on graphical methods of solving problems, contained in the first edition, was omitted, and in its place a chapter containing solutions of twenty-four mechanical problems selected from many different fields of mechanical engineering, were introduced. This substitution, it is believed, greatly enhanced the value of the book, and met with the approval of readers especially interested in the use of formulas in mechanics. In the present—the third—edition, this feature has, therefore, been retained.

CHAPTER I

GENERAL REMARKS ON SELF-EDUCATION AND THE USE OF FORMULAS*

There are several ways of obtaining an education: The easiest and, until recent years, the usual way is to begin at the age of seven and continue steadily at school till the age of twenty-four, at father's expense. It is a fortunate fact that education is by no means unattainable otherwise; indeed many of the greatest and most widely useful educations the world has known have been obtained almost without a look at the inside of a school. A second method, quite modern, is the correspondence school—most excellent in many respects, yet not completing the available ways of obtaining an education. The final method is that of self-education. Nearly every successful man in engineering must necessarily obtain a very large share of his education in this manner, no matter what his general educational facilities have been; and it is for the purpose of explaining the possibilities of this method, and to plant the seed of self-help, that this and the following chapters have been written. They are divided into five heads dealing with the following subjects:

1. Present introduction, explaining general methods to be followed, and the principles of the use of formulas.
2. Examples of the use of formulas in mechanics.
3. The application of formulas to the solution of problems involving the principles of levers and moments, showing the simplicity of the form and application of the formulas.
4. The application of formulas in finding the center of gravity of geometrical figures.
5. The elements of the theory of the strength of materials, and the use of formulas in calculations of strength of beams.

It is the aim of these chapters to start the ambitious young man of sufficient grit upon a path which, if rightly followed, will in the future surely place him on par with those more fortunate men of his age who have enjoyed a college education, and to leave him in a position to continue to read and study and to understand the technical discussion and articles on design which appear in the technical press.

Engineering education does not consist in knowing things mechanical—far from it. It consists largely in knowing where to find technical literature upon any given subject when it is wanted, and knowing how to read it when it is found. Therefore, the first thing needed by our student is a place to store his newly acquired knowledge, aside from his head. The first attempt in this line of the author of this chapter, was a book having black canvas covers and a flexible back. Tapes were provided to lace in the leaves, which were made of fairly

* MACHINERY, October, 1905.

heavy cardboard, perforated for the tapes, and having a flexible strip along the perforated edge to enable the leaves to turn back properly. Twenty-six alphabet leaves were made similar to those in dictionaries and memorandum books, and a supply of extra leaves kept on hand.

Clippings from papers and catalogues were pasted on blank leaves and inserted under the proper letter, also notes and formulas received from others were written in, making the book a record of past work and study. The book, finally becoming too large to be convenient and too small to hold everything to be preserved, gave way to the card index and filing case.*

Having provided a systematic way to file our clippings, we are ready to consider the sources of the same. First subscribe for one or two of the leading technical journals devoted to your line of work. Make a practice of sending for catalogues of machinery manufacturers, and file them in the filing box. Many catalogues present, besides the goods manufactured, tables and data of value. If you can clip out these tables and file them in the card index without destroying the catalogue, do so; if not, make an entry in the card index to show where they may be found, before filing the catalogue. Always write your name in the catalogues, for as the file grows, you will find demands upon it from others, and this will aid in keeping the file intact. Remember that a catalogue received implies confidence on the part of the sender that it will eventually prove of use to him by bringing his goods before possible purchasers, and for this reason, as well as for your own convenience, all catalogues received should be listed and filed.

Duplicate clippings, such as tables, may often be exchanged with others, and thus our files are enlarged. This is not meant to encourage a mere mania for collecting—far from it. We should so study all data filed as to understand it at the time, and if found difficult, make such notes as will readily recall the study to our minds in the future.

Mathematical Signs and Expressions

The first thing to be done in preparation for study, and for reading the technical papers, is to become familiar with the *engineering language*. The *spoken engineering language* is of course the native tongue of the country, with, however, plenty of new words to master; but the *written engineering language* consists very largely of symbols, so like those of higher mathematics in appearance as often to discourage the beginner from further efforts. In the *written engineering language*, rules, instead of being written in the native tongue, are expressed by combinations of these symbols, and when so expressed are called formulas.

Now, the mathematician, when deriving a formula, uses the same symbols as the engineer when writing a formula, and if we accept the work of the mathematician as correct, we need pay no attention to the use of these symbols in deriving formulas, but give our attention to learning to read the symbolic language of the engineer with sufficient

* See MACHINERY'S Reference Series No. 2, Drafting-Room Practice, second edition, page 44: Card Index for the Draftsman's Individual Records.

ease to enable us to follow the operations called for by any formula we may wish to use.

The following table exhibits in the first column the symbols most frequently met with; in the second column the arithmetical equivalent of the symbols is given, assuming that $a=2$ and $b=4$; in the third column the symbols are expressed in English to give the proper method of reading the symbols.

TABLE 1. COMMON MATHEMATICAL SIGNS

$a=2 \quad b=4$		a equals 2 b equals 4
$a+b=c$	$2+4=6$	a plus b equals c
$b-a=d$	$4-2=2$	b minus a equals d
$a \times b=e$ $a.b=e$ $ab=e$	$2 \times 4=8$	a times b equals e, or ab equals e
$a(a+b)=f$	$2 \times 6=12$	a times a plus b equals f
$b \div a=h$ $\frac{b}{a}=h$	$\frac{4}{2}=2$	b divided by a equals h, or b over a equals h
$a<b$	$2<4$	a is less than b
$b>a$	$4>2$	b is greater than a
$b:a::f:c$ $\frac{b}{a}=\frac{f}{c}$	$\frac{4}{2}=\frac{12}{6}$	b is to a as f is to c b divided by a equals f divided by e b over a equals f over c
$a^2=b$	$2 \times 2=4$	a square equals b*
$b^3=k$	$4 \times 4 \times 4=64$	b cube equals k
$\sqrt{b}=a$	$\sqrt{4}=2$	square root of b equals a
$\sqrt[3]{e}=a$	$\sqrt[3]{8}=2$	cube root of e equals a

Examples of Formulas

Let us now take the simple case of finding the area of a circle whose diameter we know. Expressed in English the rule is: Multiply the diameter by itself, then multiply the resulting product by 0.7854. The result is the area of the circle. If the diameter is expressed in inches, the area will be expressed in square inches. The corresponding mathematical expression is

$$A=0.7854\,d^2 \qquad (1)$$

where A = the area in square inches,

d = the diameter in inches.

Note that d^2 simply means $d \times d$.

Now, to solve this expression for a particular case, suppose we wish to know the area of a circle nine inches in diameter. We simply substitute for d^2 its numerical value, and perform the indicated operation, thus:

$$A=0.7854 \times 9 \times 9=0.7854 \times 81=63.617 \text{ square inches.}$$

* For a more complete explanation of the meaning of square and square root, and cube and cube root, see MACHINERY'S Reference Series No. 52, Advanced Shop Arithmetic for the Machinist, or MACHINERY'S Jig Sheets No. 19A, Square Root, and No. 20A, Cube Root.

Take as another example the formula for the indicated horse-power of an engine:

$$H.P. = \frac{PLAN}{33{,}000} \qquad (2)$$

where P = the mean effective pressure in pounds per square inch,
L = the length of stroke in feet,
A = the area of the piston in square inches,
N = the number of strokes per minute.

Note that $PLAN$ simply means $P \times L \times A \times N$.*

The whole information as to how to determine the indicated horse-power of an engine is given in a very small space in the formula, while to write the same in English would require considerable of the space at our disposal.

Take the case of an 8 × 10-inch engine running at 100 revolutions per minute under 125 pounds mean effective pressure; here we have:

$P = 125$ pounds,

$$L = \frac{10 \text{ inches}}{12} = 0.833 \text{ feet},$$

$A = 0.7854 \times 8 \times 8 = 50.26$ square inches,

$N = 100$ rev. per min. $\times 2 = 200$.

Then,

$$H.P. = \frac{125 \times 0.833 \times 50.26 \times 200}{33{,}000} = 31.7$$

Right-angled Triangles

In right-angled triangles,† if we call the side opposite the right angle a, and the sides forming the right angle b and c, then the following formula expresses the relationship between the three sides:

$$a = \sqrt{b^2 + c^2} \qquad (3)$$

Assume, for example, that in a right-angled triangle one of the sides forming the right angle is 8 inches long, and the other side forming the right angle is 6 inches. What is the length of the side opposite the right angle?

If we insert the given dimensions in the formula above, we have:

$$a = \sqrt{8^2 + 6^2} = \sqrt{64 + 36} = \sqrt{100} = 10.$$

The side opposite the right angle, thus, is 10 inches long.

* See MACHINERY'S Reference Series No. 52, Advanced Shop Arithmetic for the Machinist, or MACHINERY'S Jig Sheet No. 16A, Use of Formulas.

† See MACHINERY'S Jig Sheet No. 21A, Squares, Rectangles, Triangles, etc. For a more complete treatment of the right-angled triangle see MACHINERY'S Reference Series No. 52, Advanced Shop Arithmetic for the Machinist, and No. 54, Solution of Triangles.

CHAPTER II

THE USE OF FORMULAS IN MECHANICS

The use of formulas for solving problems in mechanics can best be made clear by actual examples. In the present chapter, therefore, a number of problems have been solved, showing the methods employed, and the manner in which the formulas taken from hand books and reference works are used.

Problem 1.—A metal ball falls from the top of a tower 300 feet high. How long a time will be required before it reaches the ground?

The formula by means of which this problem is solved is:*

$$t = \sqrt{\frac{2h}{g}} \qquad (4)$$

in which t = time in seconds,

h = height in feet,

g = acceleration due to gravity = 32.16 feet.

Inserting the known values of h and g in the formula, we have:

$$t = \sqrt{\frac{2 \times 300}{32.16}} = \sqrt{18.66} = 4.32 \text{ seconds.}$$

Problem 2.—What is the velocity of the ball in the previous example when it reaches the ground?

The formula for finding the velocity is:

$$v = \sqrt{2gh} \qquad (5)$$

in which v = velocity in feet per second, and h and g denote the same quantities as in Problem 1. Inserting the values of g and h in the formula, we have:

$$v = \sqrt{2 \times 32.16 \times 300} = \sqrt{19{,}296} = 139 \text{ feet, nearly.}$$

Problem 3.—A projectile is fired from a 12-inch gun vertically into the air. It strikes the ground, coming down, exactly 1 minute and 40 seconds after it left the muzzle. Disregarding air resistance, what height did the projectile reach? What was its velocity when leaving the muzzle? And what is the energy of the projectile when it strikes the ground, if its weight is assumed to be 600 pounds?

The time required for the projectile to reach its greatest height is one-half of the total time for the upward and downward journey. Thus, in 50 seconds, the projectile has reached the point where its velocity is zero, and where it begins to fall. The formula for finding the height reached is:

$$h = \frac{gt^2}{2} \qquad (6)$$

* See MACHINERY'S Reference Series No. 5, First Principles of Theoretical Mechanics, page 34, second edition.

in which h, g and t denote the same quantities as in Problem 1. Inserting the known values, we have:

$$h = \frac{32.16 \times 50^2}{2} = \frac{32.16 \times 2{,}500}{2} = 40{,}200 \text{ feet,}$$

$$\text{or } \frac{40{,}200}{5{,}280} = 7.6 \text{ miles, approximately.}$$

The velocity of the projectile when leaving the muzzle is the same as the velocity acquired when again reaching the ground. This velocity is found by the formula:

$$v = gt = 32.16 \times 50 = 1{,}608 \text{ feet per second.} \qquad (7)$$

The energy of the projectile when it strikes the ground equals its weight multiplied by the distance through which it has fallen. If W = weight, and E = energy, we have:

$$E = W \times h = 600 \times 40{,}200 = 24{,}120{,}000 \text{ foot-pounds.} \qquad (8)$$

Another formula for the energy is as follows:

$$E = \frac{Wv^2}{2g}. \qquad (9)$$

This formula, with the values of W, v and g inserted, will, of course, give the same result.

$$E = \frac{600 \times 1{,}608^2}{2 \times 32.16} = \frac{600 \times 2{,}585{,}664}{2 \times 32.16} = 24{,}120{,}000 \text{ foot-pounds.}$$

If, upon reaching the ground, the projectile buries itself to a depth of 8 feet, what is the average force of the blow with which it strikes the ground? The average force of the blow equals the energy divided by the distance d in which it is used up, plus the weight of the projectile, or if F = average force of blow:

$$F = \frac{E}{d} + W = \frac{24{,}120{,}000}{8} + 600 = 3{,}015{,}600 \text{ pounds.} \qquad (10)$$

Problem 4.—A drop hammer weighing 300 pounds falls through a distance of 3 feet. What is the stored or kinetic energy of the hammer when it strikes the work, and what is the average force with which it delivers the blow, if, on striking the work, it compresses it ½ inch?

From Formula (8) given in Problem 3, we have:

$$E = W \times h = 300 \times 3 = 900 \text{ foot-pounds.}$$

The distance d in which this energy is used up equals ½ inch or ½ ÷ 12 = 0.04 foot. Therefore, from Formula (10) the average force is:

$$F = \frac{E}{d} + W = \frac{900}{0.04} + 300 = 22{,}500 + 300 = 22{,}800 \text{ pounds.}$$

Problem 5.—Find the stress in the rim of a fly-wheel, 5 feet mean diameter, made of cast iron, the rim being 2 inches wide by 4 inches deep, if the fly-wheel rotates at a velocity of 200 revolutions per minute.

The formula for the stress in the rim is:*

$$S = 0.00005427\ WRr^2 \qquad (11)$$

in which S = stress in pounds on the rim section,
W = weight of rim in pounds,
R = mean radius in feet, and
r = revolutions per minute.

We know that the mean diameter of the fly-wheel is 5 feet; therefore, $R = 2.5$ feet; r is given as 200; but we must find the value of W before we can apply Formula (11).

The weight W of the rim equals its volume or content in cubic inches multiplied by the weight of cast iron per one cubic inch. The volume of the rim equals the cross-sectional area of the rim multiplied by the circumference of the circle having for radius the mean radius of the flywheel; expressed as a formula:

$$V = 2\ R \times 3.1416 \times a \times b.$$

in which V = the volume of the rim, in cubic inches, R = the mean radius, in inches, a = the width, and b = the depth of the rim, in inches. Substituting the values in this formula, we have:

$$V = 2 \times 30 \times 3.1416 \times 2 \times 4 = 1{,}508 \text{ cubic inches.}$$

One cubic inch of cast iron weighs 0.26 pound. The weight of the rim then is:

$$W = 1{,}508 \times 0.26 = 392 \text{ pounds.}$$

We can now substitute the values in Formula (11):

$$S = 0.00005427 \times 392 \times 2.5 \times 200^2 = 2{,}127 \text{ pounds.}$$

The multiplication above can be carried out by the use of logarithms as follows:†

$$\begin{aligned} \log 0.00005427 &= \bar{5}.73456 \\ \log 392 &= 2.59329 \\ \log 2.5 &= 0.39794 \\ 2 \times \log 200 &= 4.60206 \\ \hline \log S &= 3.32785 \end{aligned}$$

Hence $S = 2{,}127$ pounds.

Problem 6.—The cylinder of a steam engine is 16 inches in diameter, and the length of the piston stroke 20 inches. The mean effective pressure of the steam on the piston is 110 pounds per square inch, and the number of revolutions per minute of the engine fly-wheel is 80. What is the power of the engine in indicated horse-power?

The formula for the horse-power of engine has been given in Chapter I, page 6:

$$H.P. = \frac{PLAN}{33{,}000} \qquad (2)$$

in which P = mean effective pressure in pounds per square inch,

* See MACHINERY'S Reference Series No. 40, Fly-Wheels, page 19, first edition.
† See MACHINERY'S Reference Series No. 53, Use of Logarithms and Logarithmic Tables.

L = length of stroke in feet,
A = area of piston in square inches,
N = number of strokes of piston per minute.

In the given problem $P = 110$; L (in feet) $= \frac{20}{12} = 1\ 2/3$; A, the area of the piston in square inches $= 16^2 \times 0.7854 = 256 \times 0.7854 = 201.06$; and N, the number of strokes of piston per minute $= 2 \times$ revolutions of fly-wheel $= 2 \times 80 = 160$. Substituting these values in the formula, we have:

$$H.P. = \frac{110 \times 1\ 2/3 \times 201.06 \times 160}{33{,}000} = 178.72.$$

Problem 7.—It is required to determine the diameter of cylinder and length of stroke of a steam engine to deliver 150 horse-power. The mean steam pressure is 75 pounds; the number of strokes per minute is 120. The length of the stroke is to be 1.4 times the diameter of the cylinder.

First insert in the horse-power Formula (2) the known values:

$$150 = \frac{75 \times L \times A \times 120}{33{,}000} = \frac{3 \times L \times A}{11}.$$

The last expression is found by cancellation.

Assume now that the diameter of the cylinder in inches equals D. Then $L = \frac{1.4\,D}{12} = 0.117\,D$, according to the requirements in the problem; the divisor 12 is introduced to change the inches to feet, L being in feet in the horse-power formula. The area $A = D^2 \times 0.7854$. If we insert these values in the last expression in our formula, we have:

$$150 = \frac{3 \times 0.117\,D \times 0.7854\,D^2}{11} = \frac{0.2757\,D^3}{11}$$

$$0.2757\,D^3 = 150 \times 11 = 1{,}650$$

$$D^3 = \frac{1{,}650}{0.2757}\ ;\ D = \sqrt[3]{\frac{1{,}650}{0.2757}} = \sqrt[3]{5984.8} = 18.15$$

The diameter of the cylinder, thus, should be about 18¼ inches, and the length of the stroke $18.15 \times 1.4 = 25.41$, or, say, 25½ inches.

Problem 8.—Find the horse-power required for compressing 10 cubic feet of air per second from 1 to 12 atmospheres, including the work of expulsion from the cylinder. Frictional and other losses are disregarded.

The formula for the work, W, in foot-pounds, required for compression and expulsion of 1 cubic foot of air from p_1 to p_2 atmospheres is:

$$W = 8.468\,p_1 \left[\left(\frac{p_2}{p_1}\right)^{0.29} - 1\right] \times 14.7 \times 144 \qquad (12)$$

In the given problem $p_1 = 1$; $p_n = 12$; and as we are to compress 10 cubic feet instead of one, we must multiply the whole expression by 10. Thus:

$$W = 8.463 \times 1 \times \left[\left(\frac{12}{1}\right)^{0.29} - 1\right] \times 14.7 \times 144 \times 10$$

$$= 8.463 \times (12^{0.29} - 1) \times 14.7 \times 144 \times 10.$$

The value of the expression $12^{0.29}$ can be found only by the use of logarithms.*

$$\log 12 = 1.07918.$$
$$\log 12^{0.29} = 1.07918 \times 0.29 = 0.31296.$$
$$12^{0.29} = 2.056, \text{ and } 12^{0.29} - 1 = 1.056.$$

Hence:

$$W = 3.463 \times 1.056 \times 14.7 \times 144 \times 10 = 77{,}410 \text{ foot-pounds.}$$

This last result may be found by ordinary multiplication, or, more quickly, by logarithms as follows:

$$\log \ 3.463 = 0.53945$$
$$\log \ 1.056 = 0.02366$$
$$\log \ 14.7 \ = 1.16732$$
$$\log 144 \ = 2.15836$$
$$\log \ 10 \ = 1.00000$$
$$\log W = 4.88879 \qquad W = 77{,}410.$$

As a horse-power equals 550 foot-pounds per second, the horse-power required for compressing 10 cubic feet of air from 1 to 12 atmospheres equals:

$$H.P. = \frac{77{,}410}{550} = 151 \text{ horse-power.}$$

Problem 9.—It is required to lift a weight weighing 1 ton by means of a screw having a lead of ½ inch. A lever passing through the head of the screw, and extending 4 feet out from the center, is provided at its outer end with a handle. How great a force must be applied at this handle to lift the required weight, friction being disregarded?

Let the weight to be lifted, in pounds, be W; the force applied at the end of the lever, F; the lead of the screw, l; and the length of the lever, in inches, r. The distance passed through by force F times this force must equal the distance weight W is lifted times the weight, or, expressed as a formula:

$$F \times 2r \times 3.1416 = W \times l. \qquad (13)$$

This formula is based on the fact that during one revolution of the screw and handle, force F acts through a distance equal to the circumference of the circle described by the handle, while the weight W is lifted an amount equal to the lead of the screw. If we insert the given values in the formula above, we have:

* See MACHINERY'S Reference Series No. 53, Use of Logarithms and Logarithmic Tables.

$$F \times 2 \times 48 \times 3.1416 = 2{,}000 \times \tfrac{1}{2}$$
$$F \times 301.59 = 1{,}000$$
$$F = \frac{1{,}000}{301.59} = 3.3 \text{ pounds.}$$

It will be seen that by the given arrangement a force of 3.3 pounds would be sufficient to lift a ton. Friction, however, has not been considered in this problem, and as the frictional resistance in machines using screws for conveying power is considerable, the actual force required would be a great deal more than 3.3 pounds.

Assume that is required to find the power if friction is considered. In this case we must know the diameter of the screw and the form of the thread. We will assume that the thread is square, and that the diameter of the screw is 3 inches. The depth of a ½-inch lead square thread is ¼ inch. The pitch diameter of the screw is, therefore, 3 — ¼ = 2¾ inches.

The formula for finding the force required at the end of the handle is:

$$Q = W \frac{f + \tan a}{1 - f \tan a} \times \frac{R}{r}$$

in which Q = force at end of handle, in pounds,
W = weight to be lifted = 2,000 pounds,
f = coefficient of friction,
a = angle of helix of the thread at the pitch diameter,
R = pitch radius of screw in inches = 1⅜ inch,
r = length of handle in inches = 48.

$$\tan a = \frac{\text{lead}}{3.1416 \times \text{pitch diam.}} = \frac{0.5}{3.1416 \times 2.75} = 0.058.$$

The coefficient of friction, f, may be assumed to be 0.15. If we now insert the known values in the formula, we have:

$$Q = 2{,}000 \times \frac{0.15 + 0.058}{1 - 0.15 \times 0.058} \times \frac{1.375}{48} = 12.02 \text{ pounds,}$$

or nearly four times as much as when friction was not considered.

Problem 10.—Determine the length of the main bearing of a large horizontal steam engine. The diameter of the crank-shaft is 10 inches, and the weight of the shaft, fly-wheel, crank-pin and other moving parts that may be supported by the bearings is 60,000 pounds. Assume that two-thirds of this weight, or 40,000 pounds, comes on the main bearing. The engine runs at 80 revolutions per minute.

The length of the main bearing of an engine may be found by the formula:*

$$L = \frac{W}{PK}\left(N + \frac{K}{D}\right) \qquad (14)$$

* See MACHINERY'S Reference Series No. 11, Bearings, page 11, first edition.

in which L = length of bearing in inches,
W = load on bearing in pounds,
P = maximum safe unit pressure on bearing at a very slow speed,
K = constant depending upon the method of oiling and care which the journal is likely to get,
N = number of revolutions per minute,
D = diameter of bearing in inches.

The safe unit pressure P for shaft bearings is 400 pounds; the factor K varies from 700 to 2,000. In this case, assume first-class care and drop-feed lubrication, in which case $K = 1{,}000$. The other quantities given are $W = 40{,}000$, $N = 80$, and $D = 10$.

Inserting these values in Formula (14), gives us:

$$L = \frac{40{,}000}{400 \times 1000}\left(80 + \frac{1000}{10}\right) = \frac{1}{10}(80 + 100) = 18 \text{ inches.}$$

Problem 11.—What is the carrying capacity of a helical spring having an outside diameter of 5 inches, made from ½-inch round steel? The tensile stress per square inch of section of spring must not exceed 80,000 pounds.

The formula for the carrying capacity of helical springs is:*

$$P = \frac{S\,d^3}{2.55\,D} \qquad (15)$$

in which P = safe carrying capacity,
S = safe tensile stress per square inch,
d = diameter of wire,
D = mean diameter of spring = outside diameter minus diameter of wire.

In the given problem $S = 80{,}000$; $d = ½$; and $D = 5 - ½ = 4½$. If these values are inserted in Formula (15) we have:

$$P = \frac{80{,}000 \times 0.5^3}{2.55 \times 4.5} = \frac{10{,}000}{11.475} = 871 \text{ pounds.}$$

Problem 12.—Find the weight of steam that will flow in one minute through a pipe 100 feet in length and 2 inches in diameter, if the initial pressure is 40 pounds (absolute) per square inch and the terminal or delivery pressure 35 pounds (absolute).

The formula for finding the weight of steam under the above conditions is:†

$$W = c\sqrt{\frac{w\,(P - P_1)\,d^5}{L}} \qquad (16)$$

in which W = pounds of steam per minute,
c = constant = 52.7 for a 2-inch pipe,

* See MACHINERY'S Data Sheet No. 22, July, 1903, Formulas for Coil Springs.
† See MACHINERY'S Data Sheet No. 109, March, 1909, Steam Pipe Sizes for Heating Systems.

In the given problem, where $K = 21{,}000$, $N = 120$, $D = 8$, $a = 0.02$, and $n = 300$, we have:

$$P = 21{,}000 \times \frac{10.75 \times 120}{8^2 \times 0.02 \times 300^2} = 0.78 \text{ ton.}$$

Expressed in pounds the weight of the rim equals $0.78 \times 2{,}000 = 1{,}560$ pounds.

Problem 18.—Find the thickness of the piston for a steam engine having a cylinder diameter of 20 inches and a length of stroke of 24 inches.

The following formula may be used for finding the thickness of the piston:*

$$T = \sqrt[4]{L \times D} \qquad (22)$$

in which T = thickness of piston in inches,
L = length of stroke in inches,
D = diameter of cylinder in inches.

Inserting the given values in this formula, we have:

$$T = \sqrt[4]{24 \times 20} = \sqrt[4]{480}.$$

The fourth root of 480 can be most easily found by logarithms.†

$$\log T = \frac{\log 480}{4}.$$

$\log 480 = 2.68124$; $2.68124 \div 4 = 0.67031$.
$\log T = 0.67031$; $T = 4.68$ inches.

Problem 19.—Find the average horse-power required for taking a chip in a lathe 5/16 inch deep with a feed of 5/32 inch per revolution. The material cut is a bar of 30-point carbon steel, 4 inches in diameter, and is turned at a speed of 40 revolutions per minute.

A formula for finding the horse-power for turning in a lathe, based upon the experiments of Hartig, is as follows:‡

$$H.P. = 0.035 \times 3.1416 \times D \times n \times d \times t \times 0.28 \times 60 \qquad (23)$$

in which $H.P.$ = horse-power required for turning,
D = mean diameter of piece turned,
n = revolutions per minute,
d = depth of cut,
t = thickness of chip = feed per revolution.

In the problem given, D = outside diameter minus depth of cut = $4 - 5/16 = 3\ 11/16$; $n = 40$; $d = 5/16$; and $t = 5/32$. If we insert these values in the given formula, we have:

$H.P. = 0.035 \times 3.1416 \times 3.6875 \times 40 \times 0.3125 \times 0.1562 \times 0.28 \times 60 = 13.3$.

Problem 20.—What horse-power may safely be transmitted by a 3 inches wide, machine-cut spur gear of 16-inch pitch diameter having 64 teeth, made of cast iron and running at a velocity of 120 revolutions per minute?

* See MACHINERY'S Data Sheet No. 120, Steam Engine Design.
† See MACHINERY'S Reference Series No. 53, Use of Logarithms and Logarithmic Tables.
‡ See MACHINERY'S Reference Series No. 16, Machine Tool Drives, page 29, first edition.

The formulas for the solution of this problem are as follows:*

$$V = 0.262\,D\,R \tag{24}$$

$$S = S_s \times \frac{600}{600 + V} \tag{25}$$

$$W = \frac{S\,F\,Y}{P} \tag{26}$$

$$H.P. = \frac{W\,V}{33{,}000} \tag{27}$$

in which V = velocity in feet per minute at pitch diameter,
D = pitch diameter in inches,
R = revolutions per minute,
S = allowable unit stress of material at given velocity,
S_s = allowable static unit stress of material,
W = maximum safe tangential load, in pounds, at pitch diameter,
Y = factor dependent upon pitch and form of tooth,
F = width of face of gear,
P = diametral pitch.
$H.P.$ = horse-power transmitted,

The known values to be inserted in the given formulas are $D = 16$, $R = 120$, S_s (for cast iron, assumed) $= 6{,}000$, $F = 3$; Y (for 64 teeth, standard form) $= 0.36$; and $P = 64 \div 16 = 4$. If we insert these values, as required, in the Formulas (24) to (27), and insert the values obtained in each formula in the next succeeding one, we have:

$$V = 0.262 \times 16 \times 120 = 503 \text{ feet.}$$

$$S = 6{,}000 \times \frac{600}{600 + 503} = 3{,}264 \text{ pounds per square inch.}$$

$$W = \frac{3{,}264 \times 3 \times 0.36}{4} = 881 \text{ pounds.}$$

$$H.P. = \frac{881 \times 503}{33{,}000} = 13.4 \text{ horse-power.}$$

Problem 21.—The initial absolute pressure of the steam in a steam engine cylinder is 120 pounds; the length of the stroke is 26 inches, the clearance 1½ inch, and the period of admission, measured from the beginning of the stroke, 8 inches. Find the mean effective pressure.

The mean effective pressure is found by the formula:

$$p = \frac{P\,(1 + \text{hyp. log } R)}{R} \tag{28}$$

in which p = mean effective pressure in pounds per square inch,
P = initial absolute pressure in pounds per square inch,

* See MACHINERY'S Reference Series No. 15, Spur Gearing, page 29, second edition.

CHAPTER III

PRINCIPLE OF MOMENTS AS APPLIED TO THE LEVER*

The lever is the simplest element of a machine, and the principles of its action are of a simple nature. There is no reason why anyone who chooses to devote a little time to study should not be able to master these principles, and having done this, he will have gone a long way toward mastering the principles of all the elements that make up a machine.

Webster defines a lever as "a bar of metal, wood or other substance, used to exert a pressure or to sustain a weight, at one point at its length, by receiving a force or power at a second, and turning at a third on a fixed point called a fulcrum. It is of three kinds, according as either the fulcrum F, the weight W, or the power P, respectively, is situated between the other two." This is the usual definition of a lever as it is found in most books on mechanics and physics, and attention should be called to certain points about it that could easily lead a beginner astray and cause confusion at the outset. It is always best to start with a clear idea of a subject, so that there will be no uncertainty to begin with.

In Fig. 1 is a lever, in which, according to the definition, W is a weight acting at one point, P is the power or force acting at another point to raise the weight W, as indicated by the arrow, and F is the fulcrum on which the lever turns. That part of the lever between the weight and the fulcrum is called the "weight arm," and that part between the fulcrum and the power is called the "power arm." It will be noted that the fulcrum in Fig. 1 is located between the weight and power. In Figs. 2 and 3, however, are two levers in which the arrangement is different, the weight being placed between the power and fulcrum in Fig. 2, and the power placed between the weight and fulcrum in Fig. 3. These three figures illustrate the first, second, and third kinds of lever, as above defined.

The objections to this definition of the lever are, in the first place, the use of the word "power" for the force applied at the end of the lever to raise the weight. "Power" has a totally different meaning from "force," and takes into account not only force, but time and distance. A force is merely a push or pull, such as is exercised by the hand, and this is the kind of effort that is always required to raise a weight or overcome any other resistance. In the reference letters of the illustrations, therefore, we will let P stand for a push or a pull, as the case may be, instead of for the word "power." Hereafter, also, instead of calling the resistance to be overcome the "weight," we will

* MACHINERY, October and November, 1898.

call it the "resistance" and represent it by the letter *R*. A lever may have to overcome a number of resistances besides that of raising a weight, such as the resistance of friction, of a coiled spring, or of the pressure of steam, and the term "resistance" implies this better than the term "weight."

Finally, regarding the three kinds of levers mentioned above, there is no necessity for trying to separate levers into any number of classes, or for trying to remember to which class they belong in the solution of examples. All levers depend upon the same principles, which are simple

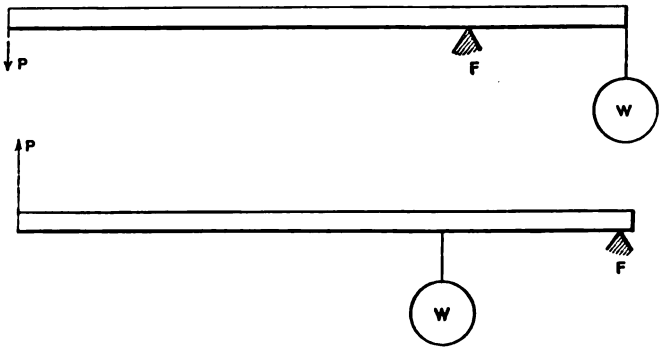

Figs. 1 and 2

and easily understood, and all that is necessary is to first master these principles without regard to the relative position of the applied force, the resistance, or the fulcrum.

The Moment of a Force

We have seen what is meant by the term "force," and the next thing to learn is what the moment of a force is. When a force acts at a point on a lever, that is, when that point is given a push or a pull, the tendency is to cause the lever to turn about its fulcrum. This tendency

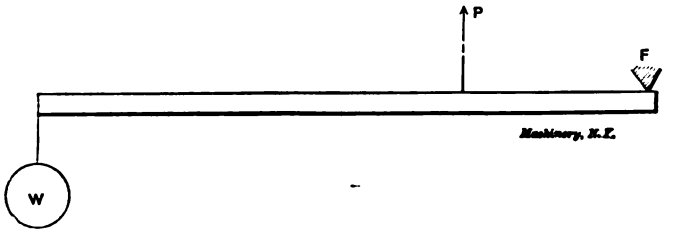

Fig. 3

depends first upon the strength of the force acting and second upon the perpendicular distance from the line of action of the force to the fulcrum. If either the strength of the push or pull exerted by the force, or the perpendicular distance of its line of action from the fulcrum, is changed, the tendency of the force to rotate the lever will be greater or less, as the case may be. The rotative effect of any force thus depends upon both the strength and the distance, and is measured

by their product, this product being called the moment of the force. The moment of force, therefore, is the measure of the turning effect of that force, and is found by multiplying the force by the perpendicular distance from its line of action to the fulcrum. If the force be measured in pounds and the distance in feet, the moment will be in foot-pounds; if the force be in pounds and the distance in inches, the moment will be inch-pounds; if the force be in tons and the distance in feet, the moment will be in foot-tons, etc. The foot-pounds measurement is the most commonly used, however.

This subject of moments is important—in fact, the most important in the whole subject of levers—and in order to fix it firmly in the mind, it will be helpful to have some common fact or operation that will illustrate it, and that can be referred to in solving complicated examples in which the application of the principle may not be entirely clear.

There is one kind of lever that is very familiar to every mechanic, and that is the wrench. We will select the wrench, therefore, to illustrate the subject of moments, and having once grasped the principle as applied to the wrench, no mechanic will be likely to have trouble with its other applications.

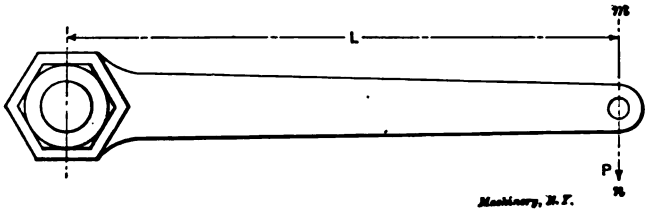

Fig. 4

Fig. 4 represents a box wrench, and, as is often done in work of a heavy character, a hole is punched in the outer end of the handle, into which a chain or rope can be hooked or fastened to assist in screwing the bolt or nut "home." Suppose the wrench is being used to screw up a nut, as shown in Fig. 4, and that the pull P on the rope is in the direction shown by the arrow, or in the direction of the line $m\ n$. The tendency of this pull to turn the wrench and nut will then be measured by the pull P in pounds, multiplied by the distance L in feet measured from the fulcrum at the center of the bolt, to the line $m\ n$, the distance being taken in the direction of a line at right angles or perpendicular to the line $m\ n$. This product gives the effect of the pull P in foot-pounds, and is called the moment of this force. Thus, if the pull P is 300 pounds, and the length L is 4 feet, the moment of the force P is $300 \times 4 = 1{,}200$ foot-pounds, and this is the measure of the turning effect of this force.

The reason why this is so will be evident if we consider another case shown in Fig. 5. Here the wrench has been placed in a new position, ready for another turn, and the pull P acts in the same direction as before, along the line $m\ n$. Now, anybody who has used a wrench knows that with the same pull a greater effect will be pro-

duced with the wrench as placed in Fig. 4 than as placed in Fig. 5, although in each case the hook is at the same distance (4 feet) from the fulcrum *F*. The direct distance, however, of the point of application of the force from the fulcrum does not necessarily have any influence on the effectiveness of this force in moving the lever. The only distance that can be considered is the perpendicular distance from the line along which the force acts to the fulcrum, and this distance is greater in Fig. 4 than in Fig. 5, and in the former the force of 300 pounds has a greater leverage than in the latter. In Fig. 5 the measure of the rotative effect is the pull *P*, which is 300 pounds, times the distance *L*, which in this case measures 2 feet, or $300 \times 2 = 600$ foot-pounds. The distance *L*, as before, is measured at right angles to

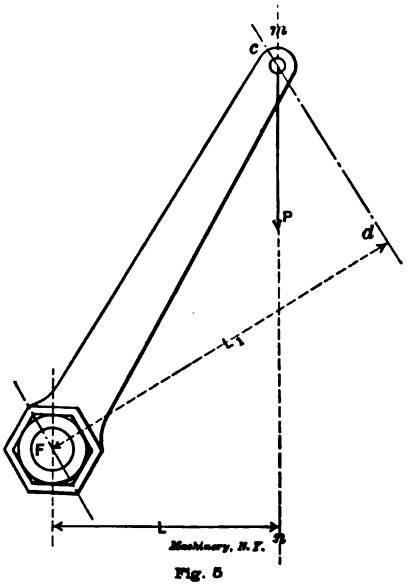

Fig. 5

the line *m n*, and if the rope had extended along the line *c d*, instead of the line *m n*, *L* would have been measured at right angles to the line *c d*, as indicated by the line L_1.

The True Lever-Arm

The distance *L* in Figs. 4 and 5 is called the lever arm. Ordinarily the arm of a lever is understood to mean that part of the lever that lies between the fulcrum and the point where the force is applied, or between the fulcrum and the point where the resistance takes place; and such it is in a strict sense if the lever arm is straight and the force acts at right angles to the lever. But in Fig. 5 the true length of the lever arm is the distance *L*, and not the length of the handle of the wrench, because *L* is the effective length acting, in the position shown. *The true lever arm*, therefore, *is the perpendicular distance from the line of action of the force to the fulcrum.*

A familiar example of the moment of a force is to be had in the action of the foot in pedaling a bicycle. When the crank has passed the upper center, and the foot is ready for the downward push, it will require a much greater effort to drive the wheel ahead than when the crank is at right angles to the direction of the motion of the foot. The crank, of course, is of the same length whatever its position; but considered as a lever, the length of its arm varies from nothing at the upper center, to the full length of the crank at the extreme forward movement of the foot. The moment of the force exerted by the foot, therefore, gradually increases from nothing at the upper part of the stroke to the greatest amount at the forward position.

Still another illustration is to be had in the curved crank shown in Fig. 6. The crank turns about the point *F*, and a rod is attached at

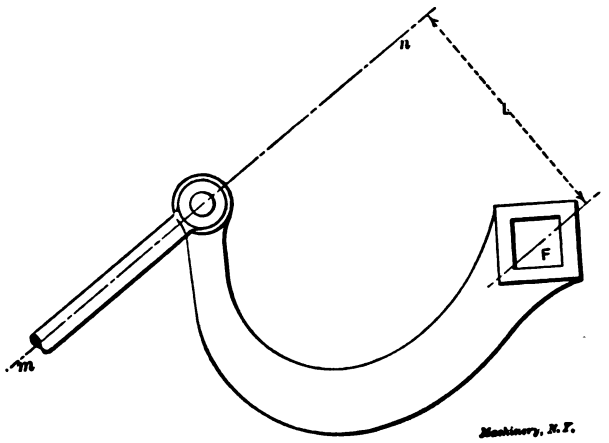

Fig. 6

the outer end which pushes in the direction shown by line *m n*. Drawing this dotted line *m n* through the point at which the push is applied and in the direction in which the push is exerted, we have *L*, which is drawn at right angles to *m n*, as the length of the lever arm, and the moment of the force is the length *L* multiplied by the force *P*.

The Principle of Moment

Thus far the illustrations that have been used have pertained to what might be called single-armed levers. We have considered only the forces acting without regard to the resistance that had to be overcome, and the levers themselves have been more of the nature of a crank than of a lever, though it is not always easy to make a distinction between the two. It is evident, however, that wherever a force is exerted, there must also be a resistance, as otherwise no initial force would be required to create motion. In the case of the wrench, the resistance was the friction between the threads of the bolt and nut acting at the end of a lever arm equal to the radius of the bolt; and

in the case of the bicycle crank, the resistance was at the rim of the bicycle wheel, the lever arm in this case being more complicated because of the sprockets and chain.

In Fig. 7 is shown a bell-crank lever pivoted at the fulcrum *F*. A pull *P* is exerted along the rod at the left, and this is balanced by another pull along the rod at the right, which acts as a resistance to the force *P*. To determine the relative rotative effects of the pull *P* and the resistance *R*, we must determine the moments of these two forces. To find the moment of *P*, draw a line *m n* through the point of the lever at which *P* takes effect, and in the direction of the line in which it acts. Then draw the line *L* from the fulcrum *F* and at right angles to the line *m n*. This will be the true lever arm, and the

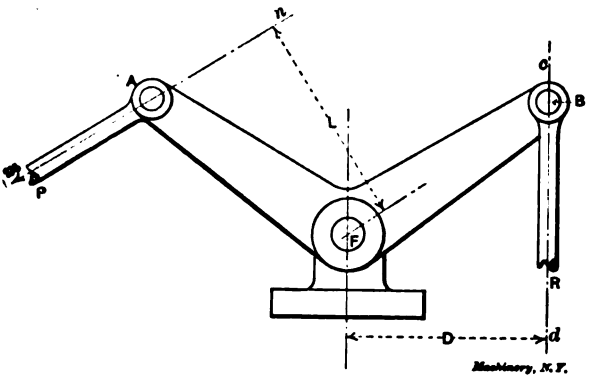

Fig. 7

moment of *P* will be the product of *P* and the length *L*. To find the moment of *R*, draw the line *c d* through the point of application of *R* and in the direction of *R*. Then draw the line *D* of a length equal to the perpendicular distance from *F* to line *c d*. This will be the true lever arm for *R*, and the moment of *R* will be the product of *R* and the distance *D*.

Since the moment of *P* measures the rotative effect of this force and the moment of *R* measures the rotative effect of the resistance, it is clear that if the lever is to balance, these two moments must be equal. If *L* is longer than *D*, as it is in this case, then *R* must be enough greater than *P* to make up for this, or otherwise the lever would begin to turn about *F*. This, in substance, is all there is to the principle of moments. The principle states that, if a body is to be in equilibrium, the sum of the moments of the forces which tend to turn it in one direction about a point is equal to the sum of the moments that tend to turn it in the opposite direction about the same point. In other words, if a body is to balance about a point, the opposing moments must be equal.

Calculation of Simple Levers

We will now be ready to solve examples of the lever by the aid of the principle of moments, and we will first consider that the weight

of the lever may be neglected, and that there are only two forces acting—the push or pull—which is applied to the lever, and the resistance overcome, these being balanced, of course, by the pressure at the fulcrum, which, in reality, is another force, but which need not be considered for the present, at least.

In Fig. 8 is shown a lever supported on the fulcrum F. At one end a push, P, of 10 pounds, is exerted, and at the other end is a resistance R, in the shape of a 100-pound weight. The distance from F to P is 40 inches, and from F to R, 4 inches. The principle of moments states that when a lever is in balance, the moment of the force tending to turn it in one direction must equal the moment of the force tending to turn it in the opposite direction. In Fig. 8 the moment of force P about fulcrum F, tending to depress the left-hand end of the lever, is $10 \times 40 = 400$ inch-pounds, and the moment of force R is $100 \times 4 = 400$ inch-pounds also, so that the lever is in balance.

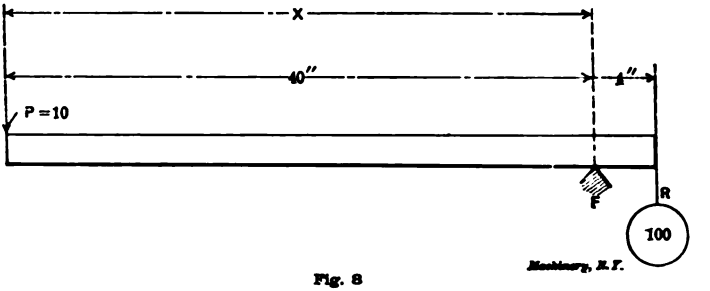

Fig. 8

Now, suppose that we had P, R, and the distance from F to R given in Fig. 8, and that we wanted to find the distance from F to P, which we will call x. By the principle of moments we have,

Moment of $P = 10 \times x$,

Moment of $R = 100 \times 4 = 400$.

But these moments are equal; hence, $10 \times x = 400$, and what we have to do is to find the value of x. It is clear that, if ten times the distance $x = 400$, the distance x must be 1/10 of 400, and all we have to do is to divide 400 by 10, giving 40 inches as the distance x.

Again, suppose it were desired to find the resistance R, the other quantities being known. For convenience we will take the moment of R first, because this contains an undetermined value. This is always a good rule to follow.

Moment of $R = 4 \times R$. (It makes no difference whether the 4 or the R is written first, but it is usual to write the figure first.)

Moment of $P = 10 \times 40 = 400$,

Then $4 \times R = 400$, and $R = \dfrac{400}{4} = 100$ pounds.

These simple examples contain all that need be known to solve lever problems where there are only two forces acting; but to make the subject still clearer, a more general example will be taken.

In Fig. 9 the lever shown is pivoted at *F*, which serves as the fulcrum. A push *P* is exerted by the rod at the right, which receives its motion from the cam and roller, as indicated. This push acts to overcome a resistance *R*, which acts along the rod seen at the left, and which may be supposed to consist of the resistance of the spring coiled around the rod, and of any piece of mechanism that this rod may have to operate. Let it be required to find how great a push, *P*, is necessary to overcome a resistance, *R*, of 250 pounds. The first thing is to find the length of the true lever arms, since without these the moments cannot be determined. To do this, first draw lines through the points on the lever at which the forces act, and in the direction in which they act. Thus, the force *P* acts at the point *C*, and the line *D H* indicates the position and direction of this force. Likewise the force *R*

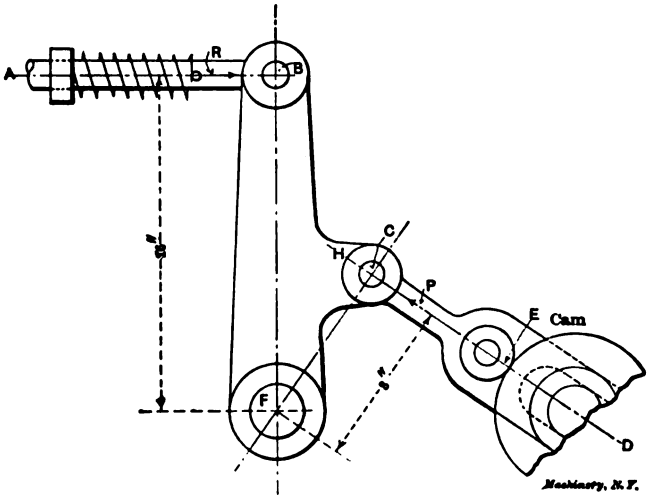

Fig. 9

acts at point *B*, and line *A B* indicates the position and direction of force *R*.

Now, the lever arm of force *P* is the perpendicular distance from *F* to line *D H*, and the lever arm of force *R* is the perpendicular distance from *F* to line *A B*. Assume that these distances measure 8 and 16 inches, respectively. Then,

Moment of $P = 8 \times P$.

Moment of $R = 250 \times 16 = 4{,}000$.

$$8 \times P = 4{,}000; \text{ and } P = \frac{4{,}000}{8} = 500 \text{ pounds.}$$

Example.—Suppose $P = 400$, $R = 150$, and the short arm = 6 inches. What is the length of the long arm? Answer—16 inches.

The safety valve in Fig. 10 is an example of a lever in which there are three forces to be considered, if we take into account the weight

of the lever, which is quite essential to do. The valve at V is acted upon by the pressure of the steam, tending to raise it. This pressure constitutes the push P upon the lever, which is resisted by the suspended weight R, and the weight of the lever, which we will call R_1. The weight of the lever is effective at the point G, the center of gravity of the lever. This point can be found by balancing the lever on a knife edge, the center of gravity being directly over the knife edge. The fulcrum of the lever is at F, and the lever arms for R, R_1 and P are marked A, B, and C, respectively.

Example 1.—Assume that $A = 30$ inches, $B = 14$ inches, $C = 3$ inches,

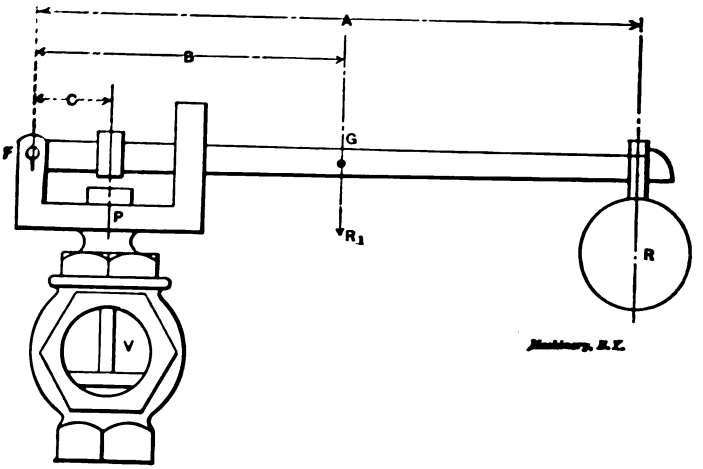

Fig. 10

$R = 20$ pounds, and $R_1 = 8$ pounds. Find what pressure of steam the valve will carry.

Moment of $P = 3 \times P$,

Moment of $R = 20 \times 30 = 600$,

Moment of $R_1 = 8 \times 14 = 112$.

For the valve to balance, the moment of P must be equal to the sum of the moments of R and R_1, for the moment of P tends to raise the ver, and the other moments tend to hold it down. Adding the mo- s of R and R_1, therefore, we have $600 + 112 = 712$, and this must ce the moment of P or $3 \times P$. Hence, $3 \times P = 712$, and $P = \frac{712}{3}$ .37 1/3 pounds. This last part of the operation is like the work of e previous examples. The 237 1/3 pounds is the total pressure upon the valve, and to obtain the pressure per square inch that can be carried, we have simply to divide 237 1/3 by the area of the valve. To be ically exact, the weight of the valve and stem should be figure 237 1/3.

Suppose it were desired to carry a total pressure upon 00 pounds. With the other dimensions remaining as

before, how heavy a weight R would have to be provided? Again, taking moments, we have,

$$\text{Moment of } R = 30 \times R,$$
$$\text{Moment of } R_1 = 8 \times 14 = 112,$$
$$\text{Moment of } P = 300 \times 3 = 900.$$

The sum of the first two moments must equal the last one, but we cannot add them as they stand, because we do not yet know what the first one is. Hence we will indicate the addition as follows:

$$30 \times R + 112 = 900.$$

Those who have had a little practice with formulas will have no trouble with finding the value of R; but for the benefit of those who have not, it can be said that we subtract the 112 from 900 and proceed as in the other examples. Thus, $900 - 112 = 788$, whence

$$R = \frac{788}{30} = 26\ 4/15 \text{ pounds.}$$

The following explanation will make the reason for subtracting 112 from 900 clear. We have found that the moment of R is 788; of R_1, 112; and of P, 900. Now, if 788 added to 112 equals 900, 900 must be 112 greater than 788, and 788 must be equal to 900 with 112 subtracted from it. Again, taking the formula as we have it, if $30 \times R$ plus 112 equals 900, $30 \times R$ must equal 900 with 112 subtracted from it.

Calculation of Compound Levers

It often happens that it is necessary to use two or more levers connected one to the other in a series, where it would not be convenient to obtain the desired multiplication with a single lever, or where it is necessary to distribute the forces acting. In such cases the levers are called compound levers, and their application is found in testing machines, car brakes, printing presses, and many other machines and devices. Probably the most familiar example is that of a pair of scales, and we will take this to illustrate the method of making the calculations for compound levers.

In Fig. 11 is a diagram showing an arrangement of levers that might be used for platform scales. The fulcrums of the various levers are in each case marked F. The scale platform is at E, bearing at each end on levers C and D, and loaded at the center with 1,000 pounds. A pressure of 500 pounds, therefore, is transmitted to lever C at a point 6 inches from the fulcrum, and 500 to lever D. As lever D is proportioned exactly the same as that part of lever C to the left of the center line of the weight—that is, as the distance from F to L in each case is exactly 4 feet, and the short arms are each 6 inches long—it follows that the final effect is the same as though the whole 1,000 pounds acted at a point 6 inches from the fulcrum F of the lever C.

Continuing through the various connections, the right-hand end of C pulls down on the lever B at a point 8 inches from its fulcrum, and this in turn pulls down on the scale beam A at a point 4 inches to the left of its fulcrum, and lifts the weight R. Question: What weight at R is required to balance the 1,000 pounds on the platform, assuming

that the system of levers is in balance so that there is no unbalanced weight to be considered? This is always provided for by a counterpoise on the scale beam.

The best way to solve any example of compound levers is to first determine the number of multiplications of each lever. Lever *A* has arms 40 and 4 inches long, and multiplies 10 times; lever *B* multiplies 4 times; and lever *C*, 25 times. Each lever multiplies in the same direction; that is, it tends to increase the force acting when we start at point *R*. Hence, the total multiplication is $10 \times 4 \times 25 = 1{,}000$, and

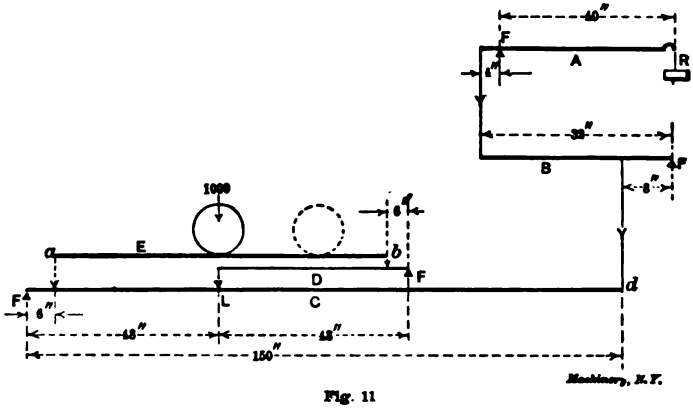

Fig. 11

thus one pound at *R* would balance the 1,000 pounds on the platform.

It may be asked whether with this arrangement the weighing of the scale would not be altered should the weight be moved to the dotted position shown in Fig. 11. A little thought will show that it would not. We have seen that the reduction from both points *a* and *b* to point *d* is 25 to 1, and it can make no difference whether 500 pounds acts at both *a* and *b*, or whether, for example, 300 pounds acts at *a* and 700 at *b*, the total 1,000 pounds being reduced 25 to 1 in either case.

CHAPTER IV

THE CENTER OF GRAVITY*

The force of gravity is exerted upon every one of the particles composing a body. The number of gravity forces acting upon a body may therefore be considered equal to the number of particles composing it. The sum or resultant of these individual forces constitutes the aggregate gravity of the body; and that point in the body at which may be applied a single resultant force that will have an effect the same as that of all the gravity forces acting upon its separate particles, is the center of gravity of the body. The center of gravity of a body will, therefore, be given by the position of the resultant of all the gravity forces acting upon its particles. If a body is supported upon its center of gravity, it will be in equilibrium in any position, and will have no tendency to rotate. This is, in substance, a definition that is sometimes given for the center of gravity.

Each one of the gravity forces acting upon the particles of a body, except those forces whose lines of action pass through its center of gravity, is producing a moment, and has a rotative effect. The lever arm of each moment is the perpendicular distance between the line of action of the force and the center of gravity of the body. Every such moment tends to produce rotation in the body, and as rotation is not produced when the body is supported upon its center of gravity, it follows that the center of gravity of a body is that point at which the moments of all the gravity forces acting upon its particles balance each other, or, in other words, at which the resultant moment of all the gravity forces is zero. This fact may be made use of in determining the position of the center of gravity. Different methods are employed for finding the center of gravity, according to the form of the body, or the arrangement of the system of bodies, for which it is to be found. Some of these methods will now be explained.

Center of Gravity of Lines

The word line, as here used, means a material line; that is, a homogeneous body of given length, having a uniform and very small transverse section, such as a fine wire. A theoretical line would, of course, have no width or thickness, and consequently, no mass and no gravity.

Single, Straight Line

The center of gravity of a straight line is at its middle point. If we conceive the line to be composed of uniform individual particles, the gravity of each particle will be the same; and the distance of each particle on one side of the middle point, from that point, will be the same as that of the corresponding particle on the opposite side.

* MACHINERY, September and October, 1898.

Hence, the moments of all the gravity forces acting upon the particles, taken about the middle point of the line, will balance, and that point will, therefore, be the center of gravity of the line. A straight line will balance upon its middle point; if supported upon that point, it will be in equilibrium in any position, and will have no tendency to rotate.

Two Straight Lines of Different Length

Let *A B* and *C D*, Fig. 12, be two straight lines of any lengths and having any positions with respect to each other. The center of gravity of each line is at its middle point, as *O* and O_1. If these two centers of gravity be connected by the straight line $O\ O_1$ the center at gravity of the system will be somewhere on this line. Draw the line $O\ B_1$ equal and parallel to $O_1\ B = \frac{1}{2}\ A\ B$; on the opposite side of $O\ O_1$ lay off on the line *B A*, a length of $O_1\ C_1$ equal to $O\ C = \frac{1}{2}\ C\ D$, and draw $B_1 C_1$. The point *g*, where the lines $O\ O_1$ and $B_1 C_1$ intersect, will be

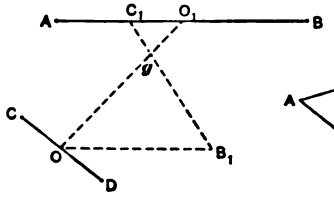

Fig. 12

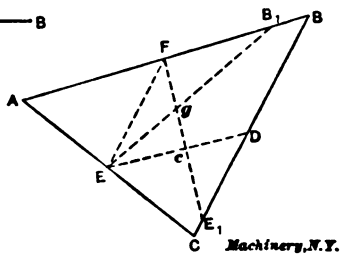

Fig. 13

Machinery, N.Y.

the center of gravity of lines *A B* and *C D*. If the given lines are parallel, $O\ B_1$ is simply laid off on *O D* prolonged. The distance $O_1\ g$ may also be calculated; it is given by the equation:

$$O_1 g = \frac{C D \times O O_1}{A B + C D}$$

Perimeter of the Triangle

Let *A B C*, Fig. 13, be any plane triangle, in which *D*, *E* and *F* are the centers of gravity of the three respective sides. Join any two of these centers, as *D* and *E*, and on this line determine, by the method just explained, the center of gravity *c* of the two sides joined. To do this, join *E* and *F*; the line *E F* will be equal and parallel to *C D*; then lay off $D\ E_1$ equal to *C E*; the intersection *c* of the lines *D E* and $E_1\ F$ will be the center of gravity of the sides *B C* and *C A*. Now lay off $F\ B_1 = \frac{1}{2}\ A\ E + \frac{1}{2}\ B\ D$ and draw $E\ B_1$; the intersection *g* of the lines $E\ B_1$ and *c F* will be the center of gravity of the three sides, or perimeter, of the triangle.

Circular Arc

Let *A B C*, Fig. 14, be the arc of a circle whose center is at *O*; *A C* is the chord and *B* is the middle point of the arc. The center of gravity of the arc will be at some point *g* on the radius *O B*, at such distance from *O* that

$$Og = \frac{AC \times BO}{ABC}$$

Center of Gravity of Plane Surfaces

A theoretical surface has no thickness, and, therefore, no mass and no gravity. In mechanical problems, however, it is often necessary to find the center of gravity of a plane figure, or, more correctly, that point in its surface corresponding to what would be the center of gravity of the figure, were it a material body of uniform thickness. As here used, therefore, the word surface may be taken to mean a material surface, such as a very thin, homogeneous plate of a piece of cardboard.

Axis of Symmetry

If a plane figure can be divided by a straight line in such a manner that the two parts of the figure will exactly coincide when folded together along the line, the line so dividing the figure is called an

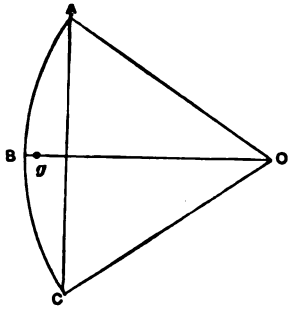

Fig. 14

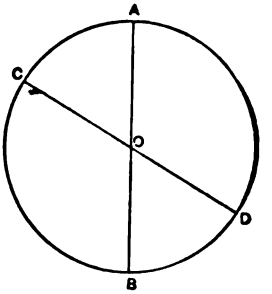

Machinery, N.Y.

Fig. 15

axis of symmetry. The diameter of a circle and the diagonal of a square are axes of symmetry for those figures.

The center of gravity of a plane figure having an axis of symmetry, must lie on such axis; if the figure has more than one axis of symmetry, the center of gravity must be at the intersection of the axes. Let *A B*, Fig. 15, be a diameter of a circle whose center is at *O;* it is also an axis of symmetry, for, if folded along this diameter, the two parts of the circle will exactly coincide. If, now, we consider the area of the circle to be composed of straight lines perpendicular to *A B*, which are not shown in the figure, the diameter *A B* will bisect each line; in other words, it will pass through the center of gravity of each line composing the area of the circle. Hence, the center of gravity of the entire system of lines composing the area of the circle, which will be the center of gravity of the circle itself, must be some point on the diameter *A B*. In like manner it can be shown that the center of gravity of the circle must lie on any other diameter, as the diameter *C D*. Consequently, the center of gravity of the circle must be at the center

O, the only point common to all diameters. That the center of gravity of the circle is at the geometrical center of the figure is so evident as to scarcely require proof; but the circle serves as a very simple example to illustrate the process of reasoning, which applies to any plane figure having two axes of symmetry, such as a circle, ellipse, rectangle, rhombus, equilateral triangle, square, or any regular polygon, and also to the perimeters of such figures.

Center of Gravity of Parts of Circles

Semicircle. The center of gravity is located on its axis of symmetry, at a distance of $0.4244r$ from the center of the circle, r being the radius of the circle.

Sector of a Circle. The center of gravity is located on its axis of symmetry, at a distance x from the center of the circle, the value of x being given by the equation:

$$x = \frac{2cr}{3l},$$

in which c is the chord and r the radius of the circle, and l the length of the arc.

Quadrant of a Circle. The center of gravity is located on its axis of symmetry, at a distance of $0.4244r$ from each radial side, or $0.6002r$ from the center of the circle, r being the radius of the circle.

Segment of a Circle. The center of gravity is located on its axis of symmetry, at a distance x from the center of the circle, the value of x being given by the equation:

$$x = \frac{c^3}{12a},$$

in which c is the chord and a the area of the segment.

Other Surfaces with Curved Outlines

Parabolic Surface. The center of gravity is located on its axis of symmetry, at 2/5 the length of the axis from the base.

Semi-parabolic Surface. The center of gravity is located at 2/5 of the length of the axis of the parabola from the base, and 5/8 the length of the semi-base from the axis.

Surface of a Hemisphere. The center of gravity is located at the middle of its axis or center radius.

Gravity Axis

It is not necessary, however, for a plane figure to have two, or even one, axis of symmetry, in order that its center of gravity may be determined. Any plane figure can be balanced upon a knife edge. The position of the knife edge will be defined by a straight line in such a position that the moments of all the gravity forces acting upon the particles composing the surface on one side of the line will just balance the moments of those on the other side. This line, about which the moments of the gravity forces balance, will here be called a gravity axis. By a process of reasoning analogous to that employed in finding

the center of gravity of the circle, it can be shown that every gravity axis of a plane figure contains the center of gravity of the figure. Consequently, the intersection of any two gravity axes determines the position of its center of gravity. It should be noticed that in many practical problems it is necessary to find the position of a gravity axis only, the exact center of gravity not being required.

Triangle

Let *A B C*, Fig. 16, be any triangle; the line *C D* extends from the vertex *C* to the middle of the opposite side. If we imagine the area of the triangle to be composed of straight lines parallel to the base *A B*, each of these parallel lines will be bisected by the line *C D;* that is, the line *C D* will pass through the center of gravity of each of the parallel lines. Every line composing the area of the triangle, and, consequently, the triangle as a whole, will just balance upon the line

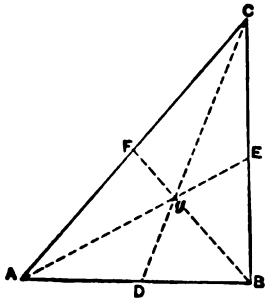

Fig. 16

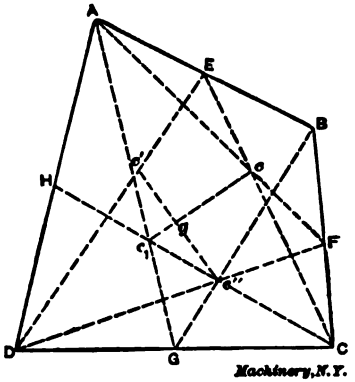

Fig. 17

C D, which will be a gravity axis of the triangle. If, also, a line be drawn from any other vertex of the triangle to the middle of the opposite side, as the line *A E*, it will also be a gravity axis. As the center of gravity must lie on both these gravity axes, it must be at their intersection *g*. It is not necessary, however, to draw more than one gravity axis, in order to determine the position of the center of gravity of a triangle. If a line be drawn from any vertex to the middle of the opposite side, the center of gravity of the triangle will be on this line and at two-thirds the length of the line from the vertex. Thus, the center of gravity *g*, Fig. 16, is at two-thirds the length of *A E* from *A*, two-thirds the length of *B F* from *B*, and two-thirds the length of *C D* from *C;* its position may be located on any one of the lines.

Trapezium

There are several quite satisfactory methods for finding the center of gravity of a trapezium. The following simple method is probably as expeditious as any, and, as it depends upon the method just explained for finding the center of gravity of a triangle, and is readily

connected with that method, it has the advantage of being easily remembered.

Let *A B C D*, Fig. 17, be any four-sided plane figure. Consider it first to be divided into the two triangles *A B C* and *A D C*. The points *E*, *F*, *G*, and *H* are the centers of the respective sides, the common side *A C* not being drawn. The intersection *c* of the lines *A F* and *C E* is the center of gravity of the triangle *A B C*, and, similarly, the intersection c_1 of the lines *A G* and *C H* is the center of gravity of the triangle *A D C*. The line $c\,c_1$ connecting these two centers of gravity, will be a gravity axis of the entire figure. The trapezium is then considered to be divided into the triangles *B A D* and *B C D*, and, by a similar construction, the position of the gravity axis $c'\,c''$ is determined. The intersection *g* of these two gravity axes will be the center of gravity of the trapezium.

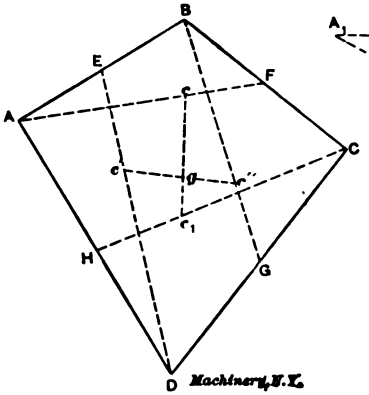

Fig. 18

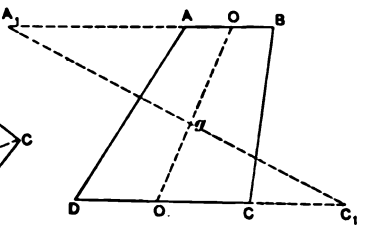

Fig. 19

For this construction, it is not necessary to draw the entire portion of each constructional line, as shown in the figure, but only such portions of the lines as are necessary to locate their intersections. Some may prefer the construction shown in Fig. 18; it is the same as that shown in Fig. 17, except that only one gravity axis is drawn for each triangle, and the center of gravity of the triangle located at two-thirds the length of the axis from its vertex.

Trapezoid

If the figure is a trapezoid, the following construction, taken from "Trautwine's Engineer's Pocket Book," is a very simple method of finding its center of gravity. Let *A B C D*, Fig. 19, be any trapezoid for which the center of gravity is to be found. Prolong the two parallel sides in opposite directions, making each prolongation equal to the other side, and join the extremities of the prolongations by a straight line; also join the centers of the parallel sides. The intersections of these lines will be the center of gravity of the figure. Thus, in the figure, $A\,A_1$ is made equal to *D C*, and $C\,C_1$ equal to *A B*, and the

extremities of the prolongations joined by the line A_1C_1, while the line $O\,O_1$ joins the centers of the parallel sides; the intersection g of the lines A_1C_1 and $O\,O_1$ is the center of gravity of the trapezoid.

Irregular Figure

The center of gravity of any irregular figure bounded by straight lines may be found by dividing it into triangles, finding the center of gravity of each triangle, and then finding the center of gravity of the system of triangles, the area of each being considered to be concen-

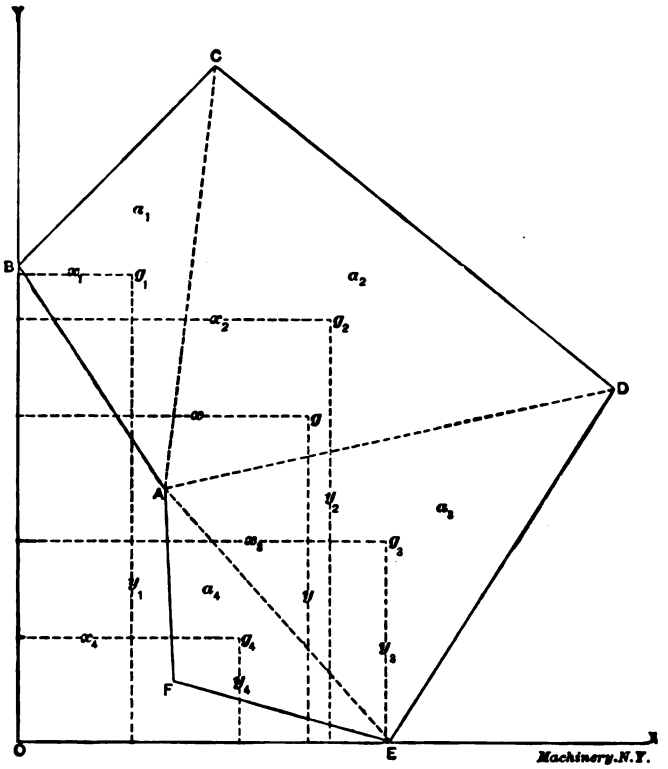

Fig. 20

trated at its center of gravity. For finding the center of gravity of the system of triangles, the method of rectangular co-ordinates may be employed. Let $A\,B\,C\,D\,E\,F$, Fig. 20, be any irregular figure bounded by straight lines. By the lines $A\,C$, $A\,D$, and $A\,E$ the figure can be divided into the four triangles $A\,B\,C$, $A\,C\,D$, $A\,D\,E$, and $A\,E\,F$, whose centers of gravity, g_1, g_2, g_3, and g_4 may be found by the method explained for triangles. Draw the vertical and horizontal axes $O\,Y$ and $O\,X$, intersecting at O; these may be any vertical and horizontal lines, but it is generally convenient to draw them through the left-hand and lower extremities of the figure, as shown; $O\,X$ is the axis of

abscissas and OY is the axis of ordinates. The lines x_1, x_2, x_3, and x_4 are, respectively, the abscissas of the centers of gravity from the axis of ordinates; and the line y_1, y_2, y_3, and y_4 are, respectively, the ordinates of the same points, or their perpendicular distances from the axis of abscissas. If a_1, a_2, a_3, and a_4 represent the areas of the four respective triangles, then the abscissa x to the center of gravity g of the entire figure will be given by the equation:

$$x = \frac{a_1x_1 + a_2x_2 + a_3x_3 + a_4x_4}{a_1 + a_2 + a_3 + a_4},$$

and the ordinate y to the same point will be given by the equation:

$$y = \frac{a_1y_1 + a_2y_2 + a_3y_3 + a_4y_4}{a_1 + a_2 + a_3 + a_4}.$$

This method applies to any figure or system of figures, either separate or joined, that can be divided into triangles or other simpler figures such that their centers of gravity and areas can be determined. It will also apply to a system of weights or solid bodies.

Center of Gravity of Solid Bodies

The center of gravity of a sphere, spheroid, cylinder, cylindrical ring, cube, prism, parallelopipedon or any polyhedron is at the geometrical center of each body.

The center of gravity of a cylinder or prism is at the middle point of a line joining the centers of gravity of its parallel surfaces.

The center of gravity of a hemisphere is on its axis, or radius perpendicular to its base, at $\frac{3}{8}$ length of the radius from the center of the sphere.

The center of gravity of a right cone or right pyramid is in the line joining the vertex with the center of gravity of the base, at $\frac{1}{4}$ the length of the line from the base.

If a body be suspended freely at a point other than its center of gravity, its center of gravity will be vertically below the point of suspension. This principle affords an easy method of finding the center of gravity of any body, as described in the second method for finding experimentally the center of gravity of any plane figure.

CHAPTER V

THE FIRST PRINCIPLES OF THE STRENGTH OF BEAMS*

Having mastered the written engineering language sufficiently to deal successfully with formulas, the next step is to make the acquaintance of such engineering terms as are most frequently met with. Foremost among these are the terms relating to the strength of materials, and more especially the strength of beams.

If a bar is laid across two supports as in Fig. 21, and a weight placed in the center of it, we shall, if the bar be limber, witness the bending of the bar as shown, or as expressed in engineering terms, the deflection of the bar. It is obvious that the stiffer the bar, the less the deflection, and that a bar might be so lacking in stiffness as to actually break when the weight is placed upon it. Now the bar may lack stiffness from one or two causes; it may be that its dimensions are not well proportioned, or it may be made of soft and pliable materials. Sometimes both these causes are combined in the same bar. If the bar does not break when the weight is placed upon it, we must admit three facts; first, that the weight bends the bar; second, that the bar resists the bending; third, that the bar is able to resist the bending because it is large enough and made of stiff enough material.

Important Definitions

The bending effect that the weight has upon the bar is called the *bending moment* upon the bar due to the weight. The ability of the bar to resist the bending is called the *moment of resistance* of the bar. How these names first came into use the author does not know; perhaps there is no explanation, but the reader must not confuse the terms with any period of time because of the word moment. Time has nothing whatever to do with the strength of the bar, or the effect of the load upon it, except for such materials as wood, when loaded near to the limit of endurance.

In Fig. 21, the point at which the greatest bending occurs is directly under the weight, and we say the bending moment is maximum at this point, and the moment of resistance of the bar must equal the *maximum bending moment* at this point in the bar. In using the term bending moment, the engineer usually means the maximum bending moment, because this has the greatest bending effect upon the bar, and we shall hereafter drop the word maximum.

* MACHINERY, November, 1906.

Relation between Bending Moment and Moment of Resistance

If now we let M = the bending moment on the bar, and R = the moment of resistance of the bar, we can express the relation of the two as given above thus:

$$M = R \qquad (33)$$

We said that the maximum bending moment was under the weight, and if the weight is placed further along on the bar, nearer one support than the other, the maximum bending moment will move with the weight. Also, if the bar is differently supported, the maximum bending moment will be at another point. For all cases of frequent occurrence, engineers have tables of formulas giving the position and amount of the maximum bending moment, so that it is only necessary to find in the tables the same case as the one we are considering, and

TABLE 2. BENDING MOMENT OF BEAMS UNDER VARIOUS SYSTEMS OF LOADING

W = total load.
l = length of beam in inches.
I = moment of inertia.
Z = section factor.

Case I	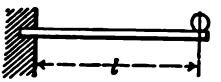	Beam fixed at one end and loaded at the other. Max. bending moment at point of support = $W\,l$.
Case II	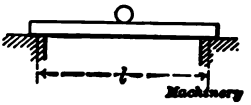	Beam supported at both ends. Single load in middle. Max. bending moment at middle of beam $\frac{W\,l}{4}$.

Machinery

taking the formula there given, substitute for the letters the corresponding dimensions in our case, and we have a numerical expression for the bending moment. The formulas given in these tables consist of combinations of dimensions measured along the bar, and weights of the loads on the bar. If, when substituting values for letters in the formula, loads are taken in tons, and distances in feet, the bending moment will be expressed in foot-tons, while if loads are taken in pounds and distances in inches, the usual custom, the bending moment will be expressed in inch-pounds.

Table 2 is a small portion of such a table as may be found in any book on machine design in any drafting-room or factory, as well as in all the handbooks issued by the steel mills.

So much for the first member of our equation, the bending moment on the bar. We have already seen that the bar offers resistance to bending by reason of two things: its dimensions, and the character of its material, and we should expect to find both dimensions and materials accounted for in the formula for the moment of resistance of any bar. This is just what the formula for the moment of resistance does. It is composed of two parts or terms, one of which expresses the resisting effect of the material of the bar, and the other

expressing the resisting effect possessed by the bar because of its shape and size. Let us investigate each term by itself, taking first the resisting effect of the material.

Tension and Compression Stresses

Let the reader take an ordinary rubber eraser of the form shown in Fig. 22, and bend it as shown in Fig. 23. While holding the eraser in the best position, draw a sharp knife across the top side. The cut immediately spreads out in the form of a V as shown at *a*. Draw the knife a second time through the same cut and the V spreads a little more. Now draw the knife across the bottom. The cut immediately closes up as at *b*. Draw the knife a second time across the same cut and it will still close up completely. In making the second cut on this side it may be necessary to release the eraser from the bent position, because the closing cut grips the knife blade and makes cutting difficult, but the cut will close, upon again bending the rubber.

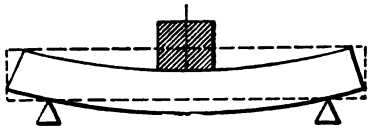

Fig. 21

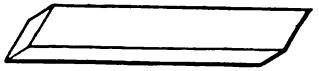

Fig. 22

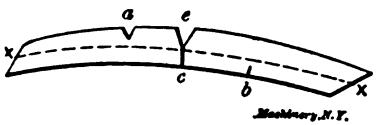

Fig. 23

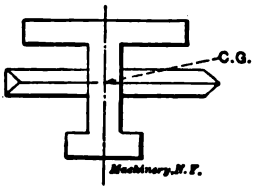

Fig. 24

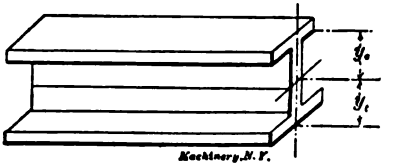

Fig. 25

Figs. 21 to 25

Having made the two cuts *a* and *b*, reverse the bend in the eraser and witness the closing of cut *a* and the opening of cut *b*. Now if you are a careful experimenter, you can start two such cuts as *a* and *b* directly opposite each other, and by cutting each one the same amount each time, you can succeed in bringing them nearly together in the center as shown at *c*. Of course, it will be impossible to bring them quite together, because that would cut the eraser apart, but by a little care you can satisfy yourself of these facts: that the portion of the eraser above the center line $x\,x$ separates when cut; and that the portion below the line closes when cut. Reversing the bend of the eraser as before reverses the behavior of the cuts, but observe that whichever way the eraser is bent, the opening cuts are to be found on the convex side, and the closing cuts on the concave side.

We know that all material (engineering and building material at least) is composed of fibers, and we must conclude from the behavior of our eraser that all the fibers on the convex side of the line $x\,x$

are stretched when the eraser is bent, while the fibers on the concave side of $x\,x$ are compressed. Since the cut through the stretched fibers opens like a V, we may conclude that those fibers lying at the top of the V are stretched more before the cutting than those lying at the point of the V. A careful examination of the cut made through the compressed fibers will show that at the outer portion of the cut, the edges are raised slightly, while at the inner portion, near the center of the eraser, the edges are not raised. We can account for this only by assuming that the fibers at the outer portion are more compressed than those near the center of the eraser.

Having performed these experiments and noted the results, we must admit the following facts: 1st, that half the fibers of a bent bar are in compression while the other half are stretched, or, as engineers say, are in tension; 2nd, that the amount of compression or tension is greatest at the outer portion of the bar, and diminishes towards the center of the bar; 3rd, that it follows from this, as well as from experiments with cut *c*, that there must be a line through the center of the bar where the fibers are neither in compression nor tension.

TABLE 3. STRENGTH OF MATERIALS—POUNDS PER SQUARE INCH.

MATERIALS.	Ultimate Strength.	Safe Working Strength.	Factor of Safety.	Kind of Stress.
Cast Iron.	88,640	16,000	5	Compression
	15,620	3,000	5	Tension
Steel.	82,500	16,000	5	Compression
	80,000	16,000	5	Tension

Now the fibers resist any change in their condition, either stretching or compressing, the amount of resistance differing in different materials. Iron fibers more than rubber fibers for instance. When a bar is bent, engineers speak of the fibers as being under stress, some being under compressive stress, and others under tensile stress, as we have seen, and they speak of the bar as being subjected to fiber stress. Now, fiber stress is expressed in pounds per square inch, and it is the duty of the engineer when designing a beam or other structure to keep the fiber stress within safe limits, and these safe limits are given in hand books for a great variety of materials, in tables of which Table 3 is a sample.

Factors Determining the Moment of Resistance

Since the material composing the bar derives its ability to resist bending by reason of the resistance of its fibers to changes, the fiber stress must be one of the terms expressing the moment of resistance of the bar. The fiber stress is denoted by the symbol f. The second term of the moment of resistance of the bar takes into consideration the strength the bar derives from its dimensions.

Bend the eraser in the direction of its greater thickness. We note it takes a much greater force to bend it thus than to bend it as we did at first, in the direction of its least thickness. If we repeat the

experiments with the cuts while bending the eraser thus, we shall find that everything witnessed before holds good for this case also. If we look for a reason for the greater force required to bend the eraser in the direction of its greater thickness, we shall find it in the fact previously observed, that the fibers are more stretched or compressed the further they are from the center line $x\,x$, and thus they present greater resistance to bending. The line $x\,x$ is called the *neutral axis*, because on it the fibers are neutral, being neither stretched nor compressed, and the fibers at the outer portion of the bar are called the extreme fibers, because they are furthest removed from the neutral axis $x\,x$.

The second term of the moment of resistance, taking account of the shape and size of the bar, is called the section factor, sometimes also

TABLE 4. VALUES OF I (MOMENT OF INERTIA) AND Z (SECTION FACTOR) FOR VARIOUS SECTIONS.

	Section.	I	Z	Area.
Case I.	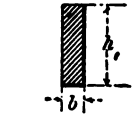	$\frac{b\,h^3}{12}$	$\frac{b\,h^2}{6}$	$b\,h$
Case II.	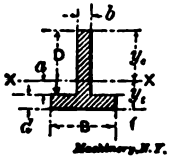	$\frac{b\,y_2^3+B\,y_1^3-(B-b)\,a^3}{8}$	$\frac{I}{y_1}$ $\frac{I}{y_2}$	$B\,d+b\,D$

called the section modulus, Z, and is given in all hand books in the shape of tables for different shapes of beams, in the style shown in Table 4.

The neutral axis $x\,x$ is not always in the center of the bar, but it always passes through the center of gravity of the cross section of the bar.

Center of Gravity

Here we shall have to digress for a moment, since it is the intention to leave no term unexplained. The reader may best become acquainted with the center of gravity in the following manner: Cut out of stiff cardboard the shape of the cross section of the bar, and balance it over a sharp edge, in a manner as shown in Fig. 24. Draw a line across the card corresponding to the edge over which it is balanced. Repeat the experiment, turning the card around on the edge, and, balancing it a second time, draw another line. The intersection of these two lines will be the center of gravity of the section of the beam. If the experiment has been done with sufficient care, the card may be balanced upon a sharp point placed at the intersection of the two lines, just as if the entire material of the card were placed vertically above the point. A definition frequently met with is: The center of gravity is that point at which the entire weight of a body may be considered as concentrated.

Another way of finding the center of gravity is to suspend the card by a fine thread alongside of a plumb line, and when the card and line have come to rest, mark the position of the plumb line on the card. Turn the card around, and suspend a second time from a different point, and mark the position of the plumb line again. Where the two marks of the plumb line cross will be the center of gravity of the figure. No matter from how many points the card may be suspended, the plumb line will always be found to pass through the center of gravity. A line in the center of the beam directly opposite the center of gravity thus found will be the neutral axis.

Equation for Bending Moment

If we now take the equation expressing the relation of the bending moment on the bar to the moment of resistance of the bar, and use the symbols for the two parts of the moment of resistance, we shall have

$$M = R = f Z.$$

Some tables do not give the section factors Z for all sections directly, but say it is $\frac{I}{y}$, and therefore we must understand this expression.

The denominator y of the fraction is the distance from the neutral axis $x\,x$ to the extreme fiber of the bar, see Fig. 25, and the numerator I is what is called by engineers the *moment of inertia* of the section of the bar. Here again there is a chance for confusion because of the use of the word inertia.

Moment of Inertia

The term moment of inertia was originally employed when comparing the energies of rotating bodies. We know that a moving body possesses energy due to that property of matter which engineers call inertia. Inertia is not a force; it is simply resistance, and is due to the incapability of a dead body to move, or of a moving body to change its velocity or direction without the application of some external force. Now the number of foot-pounds of energy possessed by a moving body is equal to $\frac{1}{2} M V^2$, where M is the mass of the body, and V its velocity in feet per second. A moving body then, must be acted upon by an external force before it can be brought to rest. A rotating body is simply a very large number of particles moving in circular paths about an axis called the axis of rotation. Each moving particle, therefore, possesses energy due to its inertia, and the energy of each particle is equal to $\frac{1}{2} m v$, where m is the mass of the particle, and v its velocity in feet per second. But the energy varies as $m v^2$, because simply dividing by 2 does not change the relative values. It is also obvious that the circumferential velocity of each particle varies as the distance from the axis of rotation, which distance or radius we call r. Hence, substituting r for v, the energy of each particle varies as $m r^2$. Suppose we imagine that the whole mass of the rotating piece, that is, the sum of all the small particles m, is concentrated in a circle that is of such diameter that the energy pos-

sessed by the entire mass is the same as before. The radius of this imaginary circle is called the radius of gyration, and is usually designated by the letter r. Now we may say that Mr^2, where M stands for the whole mass, is a measure of the energy of the rotating piece. This expression Mr^2 is given the name moment of inertia, each particle of which the rotating body is composed possessing a turning moment about the axis of rotation, due to its motion and inertia.

When it was discovered that the flexure of a beam depended upon the value ar^2 (where a is the area of the cross section of the bar, and r^2 is the mean of the squares of the distances of the infinite number of small areas into which the area of the section may be supposed to be divided, from the center of gravity of the section) ar^2 was seen to be similar to the expression Mr^2, which, in connection with the rotating bodies, had already become known as the moment of inertia; so, very carelessly on the part of those who first committed the error, it was said that the flexure of a beam varied as its moment of inertia, not because inertia has anything to do with it, for, of course, it has not, but because ar^2, the expression for the moment of resistance to flexure, happened to vary in the same way as the moment of inertia Mr^2 of the same body when rotating about its center of gravity.

The moment of inertia of a bar may be calculated by several methods, but the table in hand books give it for all usual shapes of sections, and we will not attempt the calculation here.

Universal Formula for Bending Strength of Beams

Since we are sometimes able to find in tables only the moment of inertia of a bar, and not the section factor, we must bring our formula one step further, thus:

$$M = R = fZ = f\frac{I}{y} \tag{34}$$

or

$$Z = \frac{I}{y} = \frac{M}{f} \tag{35}$$

and here we have the formula for determining the size required for any beam.

For beams in which the center of gravity is not the center of the beam, there will be two values of y, one of which we will denote as y_c, being the distance from the neutral axis to the extreme fibers in compression, and the other as y_t, being the distance from the neutral axis to the extreme fibers in tension, see Fig. 25.

In some materials the ability of the fibers to resist tension is about equal to their ability to resist compression, while in other materials there may be great inequality in this direction, some being much stronger in tension than in compression, while others are stronger in compression than in tension. In such a material we shall have two values of f, which we will denote as f_c and f_t for compression and tension, respectively.

Ultimate and Safe Stresses

Some tables on the strength of materials give what is called the ultimate or breaking strength of the materials, while other tables give the safe working strength of materials.

When using the latter tables, the values given are to be substituted directly for f_c and f_t in the formula. Since it would not do to have the material of which a beam is made strained up to the breaking point, we must, when using the former tables, make use of a factor of safety. This factor of safety is a divisor by which the breaking strength of a beam is divided to allow a margin of strength in the beam. The divisor varies from 2 to 10, and the proper use of different divisors is given in the text books.

To illustrate, the breaking strength of steel may be given as 80,000 pounds per square inch, and $\frac{80{,}000}{5} = 16{,}000$. If we substitute 16,000 for f in the formula, we shall be working out our results with a factor of safety of 5, and the beam should not actually break until loaded with five times the load designed for. As a matter of fact, the beam would become badly bent long before five times the load could be placed upon it.

Limit of Elasticity

We have seen that all material deflects under the influence of a load, and we suppose that the elasticity of the material causes it to spring back to its original condition when the load is removed. This is true within limits, but there is a point somewhere between the safe load and the breaking load at which, when the load is gradually increased, the beam becomes strained beyond its power to return to its original condition upon the load being removed. This point is variously called the *limit of elasticity*, the *yield point*, the *point of permanent* set.

Practical Examples

Let us now take up two examples illustrating the ground we have just passed over, and the use of the tables.

Example 1. A rectangular steel bar, 2 inches thick, is built into a wall as in Fig. 26, and is to hold a load of 3,000 pounds at its outer end, 36 inches from the wall. We wish to know the required depth to make the beam.

1st. Consider the bending moment on the beam. According to Case 1, Table 2, the bending moment is

$$M = W l.$$

For our case we know W and we know l, and substituting these for the letters in the formula gives us

$$M = 36 \times 3{,}000 = 108{,}000 \text{ inch-pounds.}$$

2d. Consider the permissible fiber stress in the steel bar. Table 3 gives the safe working strength of steel as 16,000 pounds per square inch.

3d. Using Formula (35) we can find the value of the section factor for our beam. We know the bending moment and we know the fiber

stress, so substituting these for the letters in the formula we get

$$Z = \frac{M}{f} = \frac{108{,}000}{16{,}000} = 6.75.$$

4th. Find the section of our beam in Table 4, Case 1, where we find that the section factor is

$$Z = \frac{b\,h^2}{6}.$$

We know Z and we know b, so substituting these values for the letters, we get

$$6.75 = \frac{2 \times h^2}{6}.$$

If we multiply both sides of this equation by 6, we shall not change its value, but shall get

$$6 \times 6.75 = 2 \times h^2.$$

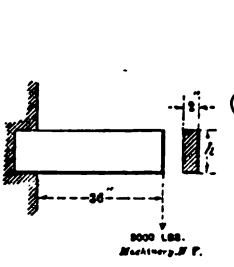

Fig. 26

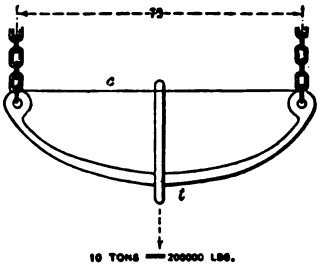

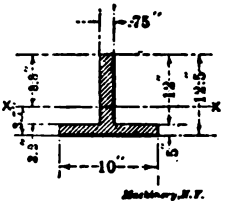

Fig. 27

If we now divide both sides by 2, we shall not change its value, but shall get

$$\frac{6 \times 6.75}{2} = h^2 = 20.25.$$

5th. We can most conveniently find the square root of 20.25 from a table of squares and roots which may be found in any hand book. This square root is 4.5, and we thus find that

$$h = 4.5 \text{ inches.}$$

If we make the beam 2 inches thick by 4.5 inches deep by 36 inches long, it will support a load of 3,000 pounds at its free end, and the fibers will be strained to 16,000 pounds per square inch.

Example 2. Let us undertake to design a suspension beam like Fig. 27 to carry ten tons, the material to be cast iron. The proposed section of the beam is more complicated than that of the previous example, and we cannot obtain a result quite so directly.

1st. Inspect the proposed beam to locate the compression and tension flanges. We find the compression flange is on top and the tension flange on the bottom, and we mark them c and t respectively.

2d. Table 3 shows us that cast iron is stronger in compression than in tension, hence we conclude that we should have more metal on the

tension side than on the compression side, and accordingly we place the section with the heavy side down.

3d. Assume a section by making the best guess possible as to the dimensions shown heavy in the figure. Cut out this section of cardboard, and find the location of the neutral axis $x\,x$ as previously explained. Now fill in the figures shown light by measuring the cardboard section.

4th. Find the section in Table 4. Here we find that before we can get the section factor of the beam we must get the moment of inertia of the beam. Substitute the dimensions of our section for the letters of the formula given in Table 4, and we shall get

$$I = \frac{(0.75 \times 8.8^3) + (10 \times 3.7^3) - (10 - 0.75)\,3.2^3}{3}$$

$$= \frac{511.1 + 506.5 - (9.25 \times 3.2^3)}{3}$$

$$= \frac{1017.6 - 303.12}{3} = \frac{714.48}{3} = 238.$$

5th. Now divide the moment of inertia just found by the distances of the extreme fibers from the neutral axis, that is, by y_c and y_t, and we get

$$Z_c = \frac{I}{y_c} = \frac{238}{8.8} = 27,$$ the section factor for the compression side.

$$Z_t = \frac{I}{y_t} = \frac{238}{3.7} = 64.3,$$ the section factor for the tension side.

6th. Inspect Table 2 and find the bending moment on the beam according to Case 2; substituting the dimensions of the beam, and the load to be carried, in the formula given, we have

$$M = \frac{W\,l}{4} = \frac{20{,}000 \times 72}{4} = 360{,}000 \text{ inch-pounds.}$$

7th. Dividing the bending moment just found by the section factors found in the 5th step, will give the fiber stress on the beam according to Formula (35), thus

$$\frac{360{,}000}{27} = 13{,}333$$ pounds per square inch on the compression side.

$$\frac{360{,}000}{64.3} = 5{,}600$$ pounds per square inch on the tension side.

The latter is too high, so another guess must be made, making the section heavier on the tension side. Then the steps 3, 4, 5 and 7 must be repeated, and if the fiber stress then comes below 3,000 pounds per square inch, the section will be right.

No. 50. Principles and Practice of Assembling Machine Tools, Part I.

No. 51. Principles and Practice of Assembling Machine Tools, Part II.

No. 52. Advanced Shop Arithmetic for the Machinist.

No. 53. Use of Logarithms and Logarithmic Tables.

No. 54. Solution of Triangles, Part I. —Methods, Rules and Examples.

No. 55. Solution of Triangles, Part II. —Tables of Natural Functions.

No. 56. Ball Bearings.—Principles of Design and Construction.

No. 57. Metal Spinning.—Machines, Tools and Methods Used.

No. 58. Helical and Elliptic Springs.—Calculation and Design.

No. 59. Machines, Tools and Methods of Automobile Manufacture.

No. 60. Construction and Manufacture of Automobiles.

No. 61. Blacksmith Shop Practice.—Model Blacksmith Shop; Welding; Forging of Hooks and Chains; Miscellaneous.

No. 62. Hardness and Durability Testing of Metals.

No. 63. Heat Treatment of Steel.—Hardening, Tempering, Case-Hardening.

No. 64. Gage Making and Lapping.

No. 65. Formulas and Constants for Gas Engine Design.

No. 66. Heating and Ventilation of Shops and Offices.

No. 67. Boilers.

No. 68. Boiler Furnaces and Chimneys.

No. 69. Feed Water Appliances.

No. 70. Steam Engines.

No. 71. Steam Turbines.

No. 72. Pumps, Condensers, Steam and Water Piping.

No. 73. Principles and Applications of Electricity, Part I.—Static Electricity; Electrical Measurements; Batteries.

No. 74. Principles and Applications of Electricity, Part II.—Magnetism; Electro-Magnetism; Electro-Plating.

No. 75. Principles and Applications of Electricity, Part III.—Dynamos; Motors; Electric Railways.

No. 76. Principles and Applications of Electricity, Part IV.—Electric Lighting.

No. 77. Principles and Applications of Electricity, Part V.—Telegraph and Telephone.

No. 78. Principles and Applications of Electricity, Part VI.—Transmission of Power.

No. 79. Locomotive Building, Part I.—Main and Side Rods.

No. 80. Locomotive Building, Part II. —Wheels; Axles; Driving Boxes.

No. 81. Locomotive Building, Part III. —Cylinders and Frames.

No. 82. Locomotive Building, Part IV. —Valve Motion.

No. 83. Locomotive Building, Part V —Boiler Shop Practice.

No. 84. Locomotive Building, Part VI. —Erecting.

No. 85. Mechanical Drawing, Part I. —Instruments; Materials; Geometrical Problems.

No. 86. Mechanical Drawing, Part II. —Projection.

No. 87. Mechanical Drawing, Part III. —Machine Details.

No. 88. Mechanical Drawing, Part IV. —Machine Details.

No. 89. The Theory of Shrinkage and Forced Fits.

No. 90. Railway Repair Shop Practice.

No. 91. Operation of Machine Tools.—The Lathe, Part I.

No. 92. Operation of Machine Tools.—The Lathe, Part II.

No. 93. Operation of Machine Tools.—Planer, Shaper, Slotter.

No. 94. Operation of Machine Tools.—Drilling Machines.

No. 95. Operation of Machine Tools.—Boring Machines.

No. 96. Operation of Machine Tools.—Milling Machines, Part I.

No. 97. Operation of Machine Tools.—Milling Machines, Part II.

No. 98. Operation of Machine Tools.—Grinding Machines.

No. 99. Automatic Screw Machine Practice, Part I.—Operation of the Brown & Sharpe Automatic Screw Machine.

No. 100. Automatic Screw Machine Practice, Part II.—Designing and Cutting Cams for the Automatic Screw Machine.

No. 101. Automatic Screw Machine Practice, Part III.—Circular Forming and Cut-off Tools.

No. 102. Automatic Screw Machine Practice, Part IV.—External Cutting Tools.

No. 103. Automatic Screw Machine Practice, Part V—Internal Cutting Tools.

No. 104. Automatic Screw Machine Practice, Part VI.—Threading Operations.

No. 105. Automatic Screw Machine Practice. Part VII.—Knurling Operations.

No. 106. Automatic Screw Machine Practice, Part VIII.—Cross Drilling, Burring and Slotting Operations.

ADDITIONAL TITLES WILL BE ANNOUNCED IN MACHINERY FROM TIME TO TIME

MACHINERY'S DATA SHEET SERIES

MACHINERY'S Data Sheet Books include the well-known series of Data Sheets originated by MACHINERY, and issued monthly as supplements to the publication; of these Data Sheets over 500 have been published, and 6,000,000 copies sold. Revised and greatly amplified, they are now presented in book form, kindred subjects being grouped together. The purchaser may secure either the books on those subjects in which he is specially interested, or, if he pleases, the whole set at one time. The price of each book is 25 cents (one shilling) delivered anywhere in the world.

MACHINERY'S REFERENCE BOOKS

This treatise is one unit in a comprehensive Series of Reference books originated by MACHINERY, and including an indefinite number of compact units, each covering one subject thoroughly. The whole series comprises a complete working library of mechanical literature in which the Mechanical Engineer, the Master Mechanic, the Designer, the Machinist and Tool-maker will find the special information he wishes to secure, selected, carefully revised and condensed for him. The books are sold singly or in complete sets, as may be desired. The price of each book is 25 cents (one shilling) delivered anywhere in the world.

LIST OF REFERENCE BOOKS

No. 1. Worm Gearing.—Calculating Dimensions for Worm Gearing; Hobs for Worm Gears; Location of Pitch Circle; Self-Locking Worm Gearing, etc.

No. 2. Drafting-Room Practice.—Drafting-Room System; Tracing, Lettering and Mounting; Card Index Systems.

No. 3. Drill Jigs.—Elementary Principles of Drill Jigs; Drilling Jig Plates; Examples of Drill Jigs; Jig Bushings; Using Jigs to Best Advantage.

No. 4. Milling Fixtures.—Elementary Principles of Milling Fixtures; Collection of Examples of Milling Fixture Design, from practice.

No. 5. First Principles of Theoretical Mechanics.

No. 6. Punch and Die Work.—Principles of Punch and Die Work; Suggestions for the Making and Use of Dies; Examples of Die and Punch Design.

No. 7. Lathe and Planer Tools.—Cutting Tools for Planer and Lathe; Boring Tools; Shape of Standard Shop Tools; Forming Tools.

No. 8. Working Drawings and Drafting-Room Kinks.

No. 9. Designing and Cutting Cams.—Drafting of Cams; Cam Curves; Cam Design and Cam Cutting; Suggestions in Cam Making.

No. 10. Examples of Machine Shop Practice.—Cutting Bevel Gears with Rotary Cutters; Making a Worm-Gear; Spindle Construction.

No. 11. Bearings.—Design of Bearings; Causes of Hot Bearings; Alloys for Bearings; Friction and Lubrication; Friction of Roller Bearings.

No. 12. Mathematics of Machine Design.—Compiled with special reference to shafting and efficiency of hoisting machinery.

No. 13. Blanking Dies.—Making Blanking Dies; Blanking and Piercing Dies; Construction of Split Dies; Novel Ideas in Die Making.

No. 14. Details of Machine Tool Design.—Cone Pulleys and Belts; Strength of Countershafts; Tumbler Gear Design; Faults of Iron Castings.

No. 15. Spur Gearing.—Dimensions; Design; Strength; Durability.

No. 16. Machine Tool Drives.—Speeds and Feeds of Machine Tools; Geared or Single Pulley Drives; Drives for High Speed Cutting Tools.

No. 17. Strength of Cylinders—Formulas, Charts, and Diagrams.

No. 18. Shop Arithmetic for the Machinist.—Tapers; Change Gears; Cutting Speeds; Feeds; Indexing; Gearing for Cutting Spirals; Angles.

No. 19. Use of Formulas in Mechanics.—With numerous applications.

No. 20. Spiral Gearing.—Rules, Formulas, and Diagrams, etc.

No. 21. Measuring Tools.—History and Development of Standard Measurements; Special Calipers; Compasses; Micrometer Tools; Protractors, etc.

No. 22. Calculation of Elements of Machine Design.—Factor of Safety; Strength of Bolts; Riveted Joints; Keys and Keyways; Toggle-joints.

No. 23. Theory of Crane Design.—Jib Cranes; Calculation of Shaft, Gears, and Bearings; Force Required to Move Crane Trolleys; Pillar Cranes.

No. 24. Examples of Calculating Designs.—Charts in Designing; Punch and Riveter Frames; Shear Frames; Billet and Bar Passes; etc.

No. 25. Deep Hole Drilling.—Methods of Drilling; Construction of Drills.

No. 26. Modern Punch and Die Construction.—Construction and Use of Subpress Dies; Modern Blanking Die Construction; Drawing and Forming Dies.

No. 27. Locomotive Design, Part I.—Boilers, Cylinders, Pipes and Pistons.

No. 28. Locomotive Design, Part II.—Stephenson Valve Motion; Theory, Calculation and Design of Valve Motion; The Walschaerts Valve Motion.

No. 29. Locomotive Design, Part III.—Smokebox; Exhaust Pipe; Frames; Cross-heads; Guide Bars; Connecting-rods; Crank-pins; Axles; Driving-wheels.

No. 30. Locomotive Design, Part IV.—Springs, Trucks, Cab and Tender.

No. 31. Screw Thread Tools and Gages.

No. 32. Screw Thread Cutting.—Lathe Change Gears; Thread Tools; Kinks.

No. 33. Systems and Practice of the Drafting-Room.

No. 34. Care and Repair of Dynamos and Motors.

No. 35. Tables and Formulas for Shop and Drafting-Room.—The Use of Formulas; Solution of Triangles; Strength of Materials; Gearing; Screw Threads; Tap Drills; Drill Sizes; Tapers; Keys; Jig Bushings, etc.

No. 36. Iron and Steel.—Principles of Manufacture and Treatment.

No. 37. Bevel Gearing.—Rules and Formulas; Examples of Calculation; Tooth Outlines; Strength and Durability; Design; Methods of Cutting Teeth.

No. 38. Grinding and Grinding Machines.

(See inside back cover for additional titles)

MACHINERY'S REFERENCE SERIES

EACH NUMBER IS ONE UNIT IN A COMPLETE LIBRARY OF MACHINE DESIGN AND SHOP PRACTICE REVISED AND REPUBLISHED FROM MACHINERY

NUMBER 20

SPIRAL GEARING

THIRD EDITION—REVISED AND ENLARGED

CONTENTS

Rules and Formulas for Designing Spiral Gears, by RALPH E. FLANDERS - - - - - - - - 3

Diagrams for Designing Spiral Gears, by FRANCIS J. BOSTOCK - - - - - - - - - - - - 25

Herringbone Gears - - - - - - - - - - 32

Calculating Gears for Generating Spirals on Hobbing Machines, by GLENN MUFFLY - - - - - - 39

The Setting of the Table when Milling Spiral Gears, by GEORGE W. BURLEY - - - - - - - 47

Copyright, 1912, The Industrial Press, Publishers of MACHINERY
49-55 Lafayette Street, New York City

The present—the third—edition of this number of MACHINERY'S Reference Series has been thoroughly revised, and a considerable amount of new matter has been included. Chapters on "Herringbone Gears" and on "Calculating Gears for Generating Spirals on Hobbing Machines" have been added, and the chapter on "Setting the Table when Milling Spiral Gears" has been entirely rewritten.

CHAPTER I

RULES AND FORMULAS FOR DESIGNING SPIRAL GEARS

In accordance with time-honored custom, this contribution to the art of designing helical or "spiral" gears opens with an apology. The subject is one which, from its very nature, can be approached by any one of a number of different ways, and it has been approached by so many of these possible different ways that perhaps the subject has become quite confused in the minds of many readers of technical literature. The writer does not offer the excuse of novelty in the methods presented in the following paragraphs, since some of the details which were independently worked out by him have been described by others. His reason for adding one more to the series of solutions of helical gear problems is that the method described appears to reduce the most serious of this class of problems (Class II, page 9) to its simplest elements. The method of procedure will be described without proof or comment.

The terms "spiral gear" and "helical gear" are, in usage, synonymous, the only difference being that the former of these terms is absolutely incorrect. Inasmuch, however, as the word "spiral" is in such common use among mechanics in this connection, the writer has not had the moral courage to use the more proper term throughout this treatise, but it would be a good plan for the readers to become familiar with the term "helical" as applied to gearing.

Dimensions and Definitions

Some of the terms used will require explanation. The center angle of a pair of helical or spiral gears is the angle made by the two center lines or axes of the gears, as taken in a view perpendicular to both axes. In Fig. 1 are shown views of three sets of spiral gears taken in the plane which shows the center angle. At the left is the ordinary case in which the shafts are at right angles with each other, so that the center angle (γ) is 90 degrees. In the second case γ is less than 90 degrees, and in the example shown at the right it is more. It should be noted in the last two cases that the position of the shaft axes is identical, but that the two center angles are located on opposite sides of axis A. In order to know on which side of the center line to take the center angle in cases like those shown, we have to reckon with the position of the teeth of the gears in contact. The center angle is taken at the side which includes the line x-x, passing lengthwise of the teeth of the gears at the point of contact with each other. Since the teeth are laid out differently in the two cases, the angles are different. The case shown in the center is much the more usual of the two, the other being very rare.

In Fig. 2 is given a diagram showing what is meant by the "tooth angle" of a helical gear. In using the expression "tooth angle," the angle made by the tooth with the axis of the gear is meant, not the angle of the tooth with the face of the gear. Fig. 2 shows a_a as the tooth angle of gear *a*, and a_b as the tooth angle of gear *b*, used in the sense in which we will use them.

The number of teeth and the pitch diameter are terms which are identically the same as those used for spur gearing* and, therefore, require no explanation. Practically all spiral gears are of small size, and hence are reckoned on the diametral pitch rather than the circular pitch system. All the rules and formulas given will, therefore, make use of the diametral pitch only. This may easily be found from the circular pitch by dividing 3.1416 by the circular pitch. The center distance is, of course, the shortest distance between the axes, and so is measured along the perpendicular common to both of them.

The regular diametral pitch of a spiral gear will be found the same as for a spur gear by dividing the number of teeth by the pitch diam-

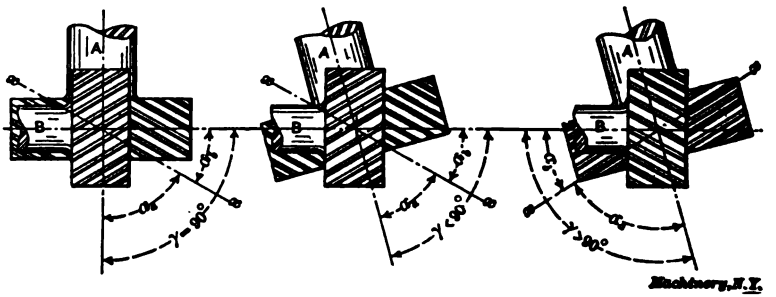

Fig. 1. Spiral Gears with Different Center Angles

eter in inches. We are not interested in knowing what this is, however, since it does not enter into the calculations at all and since the cutter used has to be for a somewhat finer diametral pitch. This is shown more clearly in Fig. 3. The normal diametral pitch, or diametral pitch of the cutter used, is reckoned from mesurements taken along the pitch cylinder at right angles to the length of the tooth. P' represents the regular circular pitch, while P_n' represents the normal circular pitch. The diametral pitch may be found from this by dividing 3.1416 by P_n'. This is the pitch of the cutter to be used. The cutter, as explained on page 5, cannot be selected for the actual number of teeth in the gear, but must take into account the helix angle of the teeth as well, since the curvature as measured on a line at right angles to the helix is at a greater radius than when measured on the circle.

The length of the helix, or the lead, as shown in Fig. 3, is the length of pitch cylinder required to permit one complete revolution of the tooth if the latter were carried around for the full length of this cylinder. In Fig. 4, the relation of lead, circumference, and tooth angle is plainly shown, the helix *AB* here being developed on a plane.

* See MACHINERY's Reference Series No. 15, Spur Gearing, Chapter II.

The addendum S, and whole depth W of the tooth for helical gears is the same as for plain spur gears. The normal thickness of tooth at the pitch line, T_n, as shown in Fig. 3, is measured in a direction perpendicular to the face of the tooth. The regular tooth thickness is shown at T, but with this we are not concerned. The outside diameter, as for spur gears, is found by adding twice the addendum to the pitch diameter.

Rules for Calculating Spiral Gear Dimensions

The following rules are used for calculating the dimensions of spiral or helical gears:

Rule 1. *The sum of the tooth angles of a pair of mating helical gears is equal to the shaft angle;* that is to say, in Figs. 1 and 2, angle a_a added to a_b equals γ, as is self-evident from the engravings.

Rule 2. *To find the pitch diameter of a helical gear, divide the number of teeth by the product of the normal pitch and the cosine of the tooth angle.*

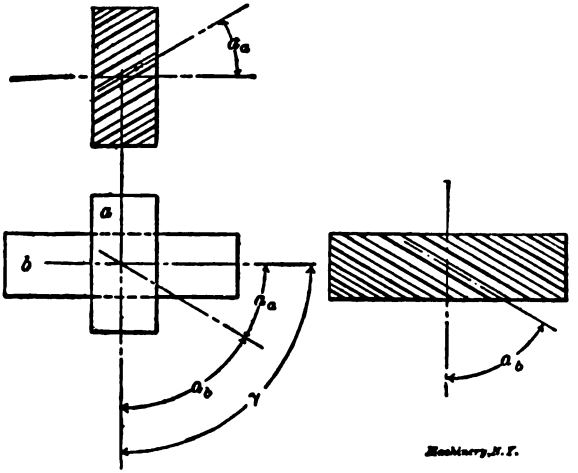

Fig. 2. Diagram Showing Notation used for Tooth Angles

Rule 3. *To find the center distance, add together the pitch diameters of the two gears and divide by 2.* This rule is evidently the same as for spur gears.

Rule 4. *To prove the calculations for pitch diameters and center distance, multiply the number of teeth in the first gear by the tangent of the tooth angle of that gear, and add the number of teeth in the second gear to the product; the sum should equal twice the product of the center distance multiplied by the normal diametral pitch, multiplied by the sine of the tooth angle of the first gear.*

Rule 5. *To find the number of teeth for which to select the cutter, divide the number of teeth in the gear by the cube of the cosine of the tooth angle.*

Rule 6. *To find the lead of the tooth helix, multiply the pitch diameter by* 3.1416 *times the cotangent of the tooth angle.*

The rules relating to the addendum and the whole depth of tooth are the same as for spur gears. They are:

Rule 7. *To find the addendum, divide* 1 *by the normal diametral pitch.*

Rule 8. *To find the whole depth of tooth space, divide* 2.157 *by the normal diametral pitch.*

Rule 9. *To find the normal tooth thickness at the pitch line, divide* 1.571 *by the normal diametral pitch.*

Rule 10. *To find the outside diameter, add twice the addendum to the pitch diameter.*

The problem of designing a pair of spiral gears presents itself in

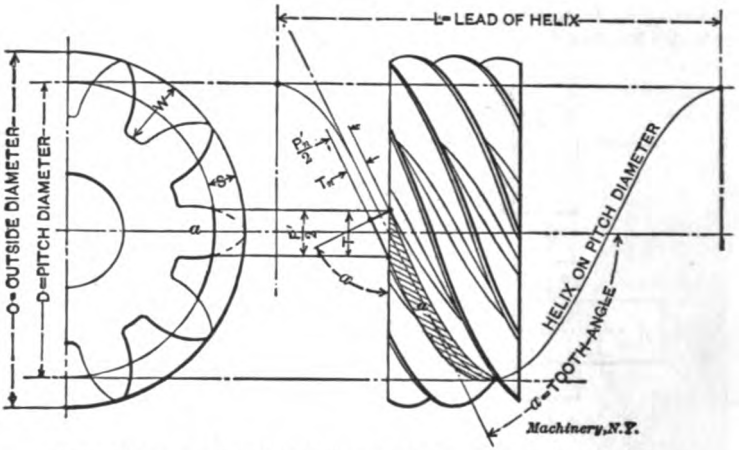

Fig. 3. Diagram of Spiral Gear, Illustrating Terms used in the Calculations

general in two different forms or classes, which may be stated as follows:

Class 1. The diametral pitch and the numbers of teeth in the two gears are given.

Class 2. A fixed center distance is given together with the velocity ratio or the numbers of teeth, with the requirement that standard cutters of even diametral pitch be used.

Examples of Calculations Under Class 1

Let it be required to make the necessary calculations for a pair of spiral gears in which the shafts are at right angles. Normal diametral pitch equals 3; number of teeth in gear equals 45; number of teeth in pinion equals 18.

There being no restriction in this particular case as to center distance we have to settle first on the tooth angles for the two gears. To obtain the highest efficiency, some authorities advise that the smallest tooth angle be given to the gear having the smallest number of teeth; and this angle should not, in general, run below 20 degrees. Keeping

it nearly 30 or even up to 45 would be better. On the basis $a_a = 30$, and $a_b = 60$ degrees, we have the following calculations:

To find the pitch diameters, use Rule 2:

$$\text{Pitch diameter of gear} = \frac{45}{3 \times \cos 60^\circ} = 30 \text{ inches.}$$

$$\text{Pitch diameter of pinion} = \frac{18}{3 \times \cos 30^\circ} = 6.928 \text{ inches.}$$

To find the center distance, use Rule 3:

$$\frac{30 + 6.928}{2} = 18.464 \text{ inches.}$$

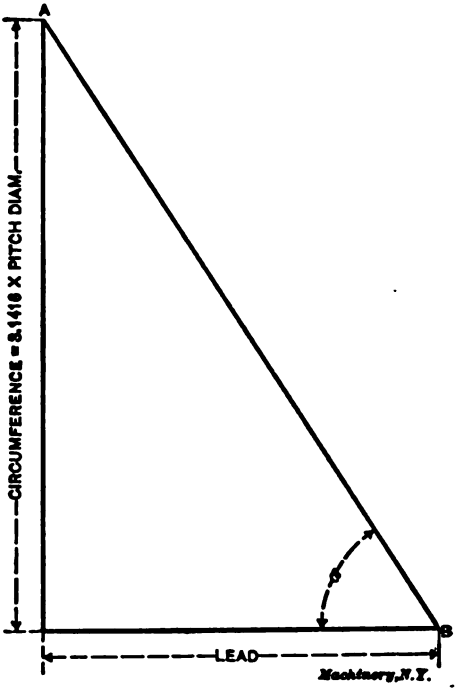

Fig. 4. Diagram Showing Relation between Pitch Diameter, Lead and Angle of Helix

To prove that the previous calculations are correct, use Rule 4:

$45 \times \tan 60^\circ + 18 = 95.940.$

$2 \times 18.464 \times 3 \times \sin 60^\circ = 95.939.$

These two results are so nearly alike that the previous calculations may be considered fully correct.

To find the number of teeth for which to select the cutter, use Rule 5:

$$\text{For gear, } \frac{45}{(\cos 60^\circ)^3} = 360.$$

For pinion, $\dfrac{18}{(\cos 30°)^3} = 28$, approximately.

To find the lead of the tooth helix, use Rule 6:
Lead for gear $= 3.1416 \times 30 \times \cot 60° = 54.38$ inches.
Lead for pinion $= 3.1416 \times 6.928 \times \cot 30° = 37.70$ inches.

To find the addendum, use Rule 7:

$$\text{Addendum} = \frac{1}{3} = 0.333 \text{ inch.}$$

To find the whole depth of tooth space, use Rule 8:

$$\text{Whole depth} = \frac{2.157}{3} = 0.719 \text{ inch.}$$

To find the normal tooth thickness at the pitch line, use Rule 9:

$$\text{Tooth thickness} = \frac{1.571}{3} = 0.527 \text{ inch.}$$

To find the outside diameter, use Rule 10:
For gear, $30 + 0.666 = 30.666$ inches.
For pinion, $6.928 + 0.666 = 7.594$ inches.

This concludes the calculations for this example. If it is required that the pitch diameters of both gears be more nearly alike, the tooth angle of the gear must be decreased, and that of the pinion increased.

Suppose we have a case in which the requirements are the same as in Example 1, but it is required that both gears shall have the same tooth angle of 45 degrees. Under these conditions the addendum, whole depth of tooth and normal thickness at the pitch line would be the same, but the other dimensions would be altered as below:

$$\text{Pitch diameter of gear} = \frac{45}{3 \times \cos 45°} = 21.216 \text{ inches.}$$

$$\text{Pitch diameter of pinion} = \frac{18}{3 \times \cos 45°} = 8.487 \text{ inches.}$$

$$\text{Center distance} = \frac{21.216 + 8.487}{2} = 14.851 \text{ inches.}$$

Number of teeth for which to select cutter:

For gear, $\dfrac{45}{(\cos 45)^3} = 127$, approximately.

For pinion, $\dfrac{18}{(\cos 45)^3} = 51$, approximately.

Lead of helix for gear $= 3.1416 \times 21.216 \times \cot 45° = 66.65$ inches.
Lead of helix for pinion $= 3.1416 \times 8.487 \times \cot 45° = 26.66$ inches.
Outside diameter of gear $= 21.216 + 0.666 = 21.882$ inches.
Outside diameter of pinion $= 8.487 + 0.666 = 9.153$ inches.

Examples of Calculations Under Class 2*

In Class 2 the writer is going to make use of the term "equivalent diameter." The quotient obtained by dividing the number of teeth in a helical gear by the diametral pitch of the cutter used gives us a very useful factor for figuring out the dimensions of helical gears, so the writer has ventured to give it the name "equivalent diameter," an abbreviation of the words "diameter of equivalent spur gear," which more accurately describe it. This quantity cannot be measured on the finished gear with a rule, being only an imaginary unit of measurement.

Rule 11. *To find the equivalent diameter of a helical gear, divide the number of teeth of the gear by the diametral pitch of the cutter by which it is cut.*

The process of locating a railway line over a mountain range is divided into two parts; the preliminary survey or period of exploration, and the final determination of the grade line. The problem of designing a pair of helical gears resembles this engineering problem in having many possible solutions, from which it is the business of the designer to select the most feasible. For the exploration or preliminary survey, the diagram shown in Fig. 5 will be found a great convenience. The materials required are a ruler with a good straight edge, and a piece of accurately ruled, or, preferably, engraved, cross-section paper. If a point, *O*, be so located on the paper that *B O*, the distance to one margin line, be equal to the equivalent diameter of gear *a*, while *B' O*, the distance to the other margin line, be equal to the equivalent diameter of gear *b*, then (when the rule is laid diagonally across the paper in any position that cuts the margin lines and passes through point *O*) *D O* will be the pitch diameter of gear *a*, *D' O* the pitch diameter of gear *b*, angle *B O D* the tooth angle of gear *a* and angle *B' O D'* the tooth angle of gear *b*. This simple diagram presents instantly to the eye all possible combinations for any given problem. It is, of course, understood that in the shape shown it can only be used for shafts making an angle of 90 degrees with each other.

The diagram as illustrated shows that a pair of helical gears having 12 and 21 teeth each, cut with a 5-pitch cutter, and having shafts at 90 degrees with each other and 5 inches apart, may have tooth angles of 36° 52′ and 53° 8′, and pitch diameters of 3 inches and 7 inches, respectively.

Suppose it were required to figure out the essential data for three sets of helical gears with shafts at right angles, as follows:

1st. Velocity ratio 2 to 1, center distance between shafts 2¼ inches.
2d. Velocity ratio 2 to 1, center distance between shafts 3⅜ inches.
3d. Velocity ratio 2 to 1, center distance between shafts 4 inches.

We will take the first of these to illustrate the method of procedure about to be described.

We have a center distance of 2¼ inches and a speed ratio between driver and driven shafts of 2 to 1. The first thing to determine is

* MACHINERY, May, 1906.

the pitch of the cutter we wish to use. The designer selects this according to his best judgment, taking into consideration the cutters on hand and the work the gearing will have to do. Suppose he decides that 12-pitch will be about right. In Fig. 5 it will be remembered that *D O* was the pitch diameter of gear *a*, while *D′ O* was the pitch diameter of gear *b*. That being the case, *D O D′* is equal to twice the distance between the shafts. In the problem under consideration this will be equal to 2 × 2¼, or 4½ inches. Fig. 6 is a skeleton outline showing the operation of making the preliminary survey with rule and cross-section paper. *A G* and *A G′* represent the margin lines of the sheet, while *D D′* represents the graduated straight-edge. By the

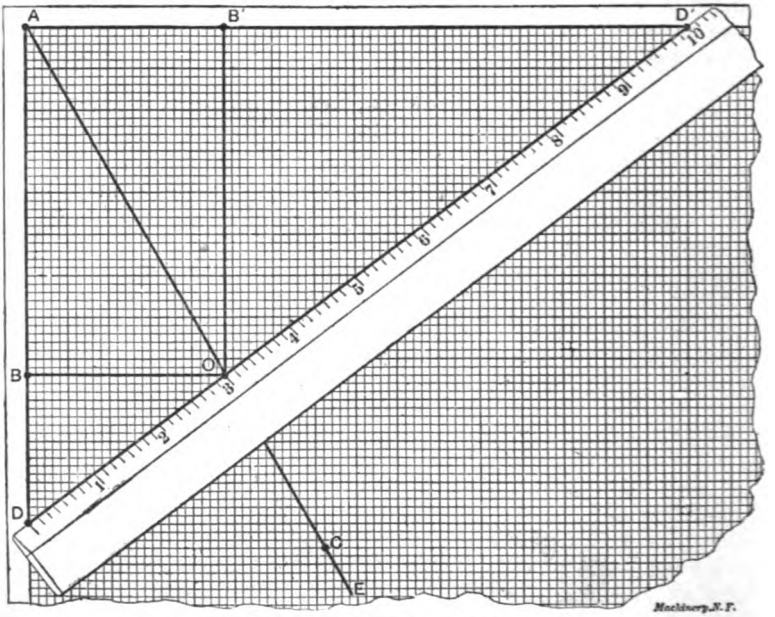

Fig. 5. Preliminary Solution with Rule and Cross-section Paper

conditions of the problem, the distance between points *D* and *D′*, where the ruler crosses the margin lines, must be equal to 4½ inches. There has next to be determined at what angle of inclination the ruler shall be placed in locating this line. To do this, we will first find our "ratio line." Select any point *C* such that *C F′* is to *C F* as 2 is to 1, which is the required ratio of our gears. Draw through point *C*, so located, the line *A E*. Line *A E* is then the ratio line, that is, a line so drawn that the measurements taken from any point on it to the margin lines will be to each other in the same ratio as the required ratio between the driving and driven gear. Now, by shifting the ruler on the margin lines, always being careful that they cut off the required distance of 4½ inches on the graduations, it is found that when the rule is laid as shown in position No. 1, cutting the ratio line at *O′*,

the distance from the point of intersection to corner *A* is at its maximum. For the minimum value, the tooth angle is the limiting feature. For a gear of this kind, 30 degrees is, perhaps, about as small as would be advisable, so when the ruler is inclined at an angle of about 30 degrees with margin line *A G'*, and occupies position No. 2 as shown, it will cut line *A E* at *O''*, and the distance cut off from the point of intersection to corner *A* will be at its minimum value. The ruler must then be located at some intermediate position between No. 1 and No. 2.

Supposing, for example, 14 teeth in gear *a* and 28 teeth in gear *b* be tried. According to Rule 11, the equivalent diameter of gear *a* will then be 14 ÷ 12, or 1.1666 inch; the equivalent diameter of *b* will be

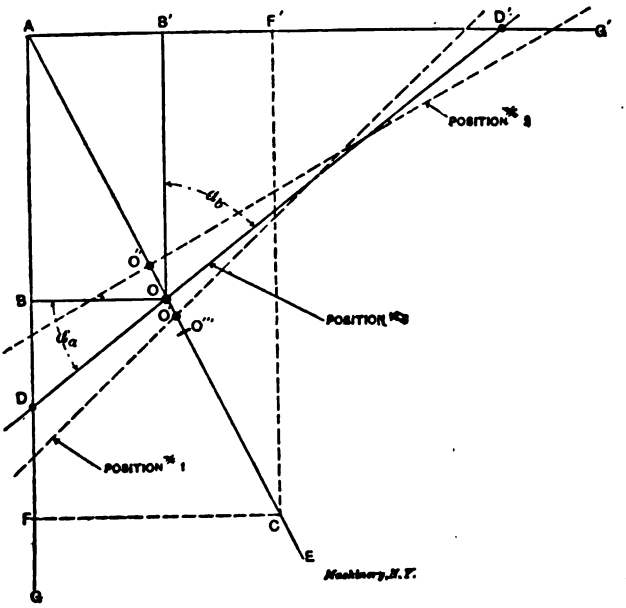

Fig. 6. Preliminary Graphical Solution for Problem No. 1

28 ÷ 12, or 2.3333 inches. Returning to the diagram to locate the point of intersection, it will be found that point *O'''* is so located that lines drawn from it to *A G* and *A G'* will be equal to 1.1666 inch and 2.3333 inches respectively, but this is beyond point *O'*, which was found to be the outermost point possible to intersect with a 4½-inch line, *D D'*. This shows that the conditions are impossible of fulfillment.

Trying next 12 teeth and 24 teeth, respectively, for the two gears, the equivalent diameters by Rule 11 will be 1 inch and 2 inches. Point *O* is now so located that *O B* equals 1 inch and *O B'* equals 2 inches. Seeing that this falls as required between *O'* and *O''*, stick a pin in at this point to rest the straight-edge against, and shift the straight-edge about until it is located in such an angular position that the

margin lines $A\,G$ and $A\,G'$ cut off 4½ inches, or twice the required distance between the shafts, on the graduations. This gives the preliminary solution to the problem. Measuring as carefully as possible, $D\,O$, the pitch diameter of gear *a*, is found to be about 1.265 inch diameter, and $D'\,O$, the pitch diameter of gear *b*, about 3.235 inches. Angle $B\,O\,D$, the tooth angle of gear *a*, measures about 37° 50′. Angle $B'\,O\,D'$, the tooth angle of gear *b*, would then be 52° 10′ according to Rule 1. To determine angle $B\,O\,D$ more accurately than is feasible by a graphical process, use the following rule:

Rule 12. *The tooth angle of gear a in a pair of mating helical gears, a and b, whose axes are* 90° *apart, must be so selected that the equivalent diameter of gear b plus the product of the tangent of the tooth angle of gear a by the equivalent diameter of gear a, will be equal to the product of twice the center distance by the sine of the tooth angle of gear a.* (This rule, it will be seen, is simply a modification of Rule 4.)

That is to say, in this case, $O\,B' + (O\,B \times$ the tangent of angle $B\,O\,D) = D\,D' \times$ the sine of angle $B\,O\,D$. Perform the operations indicated, using the dimensions which were derived from the diagram, to see whether the equality expressed in this equation holds true. Substituting the numerical values:

$$2 + (1 \times 0.77661) = 4.5 \times 0.61337,$$
$$2.77661 = 2.76016,$$

a result which is evidently inaccurate.

The solution of the problem now requires that other values for angle $B\,O\,D$, slightly greater or less than 37° 50′, be tried until one is found that will bring the desired equality. It will be found finally that if the value of 38° 20′ be used as the tooth angle of gear *a*, the angle is as nearly right as one could wish. Working out Rule 12 for this value:

$$2 + (1 \times 0.79070) = 4.5 \times 0.62024,$$
$$2.79070 = 2.79108.$$

This gives a difference of only 0.00038 between the two sides of the equation. The final value of the tooth angle of gear *a* is thus settled as being equal to 38° 20′. Applying Rule 1 to find the tooth angle of gear *b* we have: 90° — 38° 20′ = 51° 40′. The next rule relates to finding the pitch diameter of the gears.

Rule 13. *The pitch diameter of a helical gear equals the equivalent diameter divided by the cosine of the tooth angle; (or the equivalent diameter multiplied by the secant of the tooth angle).* This rule is a modification of Rule 2.

If a table of secants is at hand, it will be somewhat easier to use the second method suggested by the rule, since multiplying is usually easier than dividing. Using in this case, however, the table of cosines, and performing the operation indicated by Rule 13, we have for the pitch diameter of gear *a*:

$$1 \div 0.78442 = 1.2748, \text{ or } 1.275 \text{ inch, nearly;}$$

and for the pitch diameter of gear *b*:

$$2 \div 0.62024 = 3.2245, \text{ or } 3.225 \text{ inches, nearly.}$$

To check up the calculations thus far, the pitch diameter of the two gears thus found may be added together. The sum should equal twice the center distance, thus:

$$1.275 + 3.225 = 4.500,$$

which proves the calculations for the angle.

Applying Rule 10 to gear *a*:

$1.2748 + (2 \div 12) = 1.2748 + 0.1666 = 1.4414 = 1.441$ inch, nearly.

For gear *b*:

$3.2245 + (2 \div 12) = 3.2245 + 0.1666 = 3.3911 = 3.391$ inches, nearly.

In cutting spur gears of any given pitch, different shapes of cutters are used, depending upon the number of teeth in the gear to be cut. For instance, according to the Brown & Sharpe system for involute gears, eight different shapes are used for a gear from 12 teeth to a rack. The fact that a certain cutter is suited for cutting a 12-tooth spur gear is no sign that it is suitable for cutting a 12-tooth helical gear, since the fact that the teeth are cut on an angle alters their shape considerably. To find out the number of teeth for which the cutter should be selected, use Rule 5.

Applying Rule 5 to gear *a*:

$$12 \div 0.784^3 = 12 \div 0.4818 = 25 —.$$

and for gear *b*:

$$24 \div 0.620^3 = 24 \div 0.2383 = 100 +,$$

giving, according to the Brown & Sharpe catalogue, cutter No. 5 for gear *a* and cutter No. 2 for gear *b*.

In gearing up the head of the milling machine to cut these gears it is necessary to know the lead of the helix or "spiral" required to give the tooth the proper angle. To find this, use Rule 6. In solving problems by this rule, as for Rule 5, it will be sufficient to use trigonometrical functions to three significant places only, this being accurate enough for all practical purposes. Solving by Rule 6 to find the lead for which to set up the gearing in cutting *a*:

$1.275 \times 1.265 \times 3.14 = 5.065$, or 5 1/16 inches, nearly;

for gear *b*:

$3.225 \times 0.791 \times 3.14 = 8.010$, or 8 3/32 inches, nearly.

The lead of the helix must be, in general, the adjustable quantity in any spiral gear calculation. If special cutters are to be made, the lead of the helix may be determined arbitrarily from those given in the milling machine table; this will, however, probably necessitate a cutter of fractional pitch. On the other hand, by using stock cutters and varying the center distance slightly, we might find a combination which would give us for one gear a lead found in the milling machine table, but it would only be chance that would make the lead for the helix in the mating gear also of standard length. It is then generally better to calculate the milling machine change gears according to the usual methods to suit odd leads, rather than to adapt the other conditions to suit an even lead. It will be found in practice that the

lead of the helix may be varied somewhat from that calculated without seriously affecting the efficiency of the gears.

The remaining calculations relating to the proportions of the teeth do not vary from those for spur gears and are here set down for the sake of completeness only.

The addendum of a standard gear is found by Rule 7:

For gears *a* and *b* this will give:

$$1 \div 12 = 0.0833 \text{ inch.}$$

The whole depth of the tooth is found by Rule 8:

This gives for gears *a* and *b*:

$$2.157 \div 12 = 0.1797 \text{ inch.}$$

The thickness of the tooth is found by Rule 9:

For gears *a* and *b* of our problem this gives:

$$1.571 \div 12 = 0.1309 \text{ inch.}$$

This completes all the calculations required to give the essential data for making our first pair of helical gears. To illustrate the variety of conditions for which these problems may be solved, the other cases will be worked out somewhat differently. In the case just considered no allowance was made for possible conditions which might have limited the dimensions of the gears, and the problem was solved for what might be considered good general practice. Gear *a*, however, might have been too small to put on the shaft on which it was intended to go, while gear *b* might have been too large to enter the space available for it. If, as we may assume, these gears are intended to drive the camshaft of a gas engine, the solution would probably be unsatisfactory. Case No. 2 will therefore be solved for a center distance of 3⅜ inches as required, but the two gears will be made of about equal diameter. Fig. 7 shows the preliminary graphical solution of this problem, the reference letters in all cases being the same as in Fig. 6. With a 10-pitch cutter, if this suited the judgment of the designer, 15 teeth in gear *a* and 30 teeth in gear *b* would require that the point of intersection on the ratio line *A E* be located at *O* where *B O* equals the equivalent diameter of gear *a*, which equals 1½ inch, while *B' O* equals the equivalent diameter of gear *b*, or 3 inches, both calculated in accordance with Rule 11. The required condition now is that *D O* be approximated to *D' O*; that is to say, that the pitch diameters of the two gears be about equal. After continued trial it will be found impossible to locate *O*, using a cutter of standard diametral pitch, so that *D O* and *D' O* shall be equal, and at the same time have *D D'* equal to twice the required center distance, which is $2 \times 3\frac{3}{8}$ inches or 6¾ inches. If this center distance could be varied slightly without harm, *B D* could be taken as equal to *A B*; then it would be found that a line drawn from *D* through *O* to *D'*, though giving a somewhat shortened center distance, would make two gears of exactly the same pitch diameter.

Drawing line *D O D'*, however, as first described to suit the conditions of the problem, and measuring it for a preliminary solution the following results are obtained: The tooth angle of gear *a* = angle

$B\,O\,D = 63°\ 45'$; and the tooth angle of gear B = angle $B'\,O\,D' = 90° - 63°\ 45' = 26°\ 15'$, according to Rule 1. Performing the operations indicated in Rule 12 to correct these angles, it is found that when the tooth angle of gear a is 63° 54', and that for gear b is 26° 6', the equation of Rule 12 becomes:

$$3 + (15 \times 2.04125) = 6.75 \times 0.89803$$
$$6.06187 = 6.06170$$

which is near enough for all practical purposes. The other dimensions

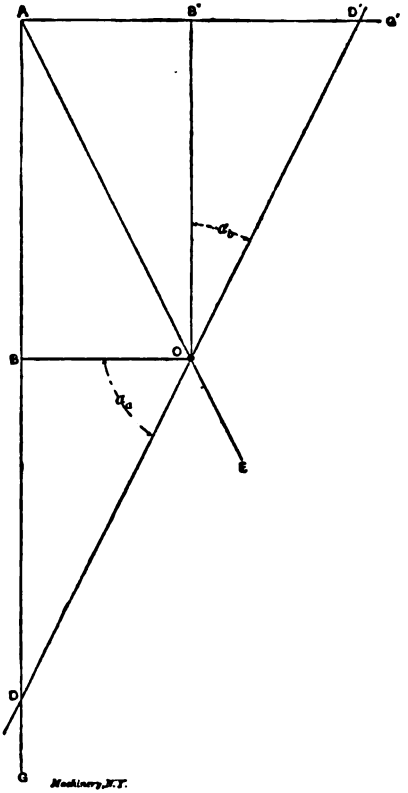

Fig. 7. Solution of Problem No. 2 for Equal Diameters

are easily obtained as before by using the remaining rules.

To still further illustrate the flexibility of the helical gear problem, the third case, for a center distance of 4 inches, will be solved in a third way. It is shown in MacCord's "Kinematics" that to give the least amount of sliding friction between the teeth of a pair of mating helical gears, the angles should be so proportioned that, in our diagrams, line $D\,D'$ will be approximately at right angles to ratio line $A\,E$. On the other hand, to give the least end thrust against the bearings, line $D\,D'$ should make an angle of 45° with the margin lines $A\,G$ and $A\,G'$, in

the case of gears with axes at an angle of 90°, as are the ones being considered. The first example worked out in detail was solved in accordance with "good practice," and line *D D'* was located about one-half way between the two positions just described, thus giving in some measure the advantage of a comparative absence of sliding friction, combined with as small degree of end thrust as is practicable. To illustrate some of the peculiarities of the problem, Case 3 will now be solved to give the minimum amount of sliding friction, neglecting entirely the end thrust, which is considered to be taken up by ball thrust bearings or some equally efficient device. On trial it will be found that, with the same number of teeth in the gear and with the same pitch as in Case 2, giving in Fig. 8, *B O*, the equivalent diameter of gear *a*, a value of 1½ inch, and *B' O*, the equivalent diameter of gear *b*, a value of 3 inches, as in Fig. 7, line *D D'* which is equal to twice

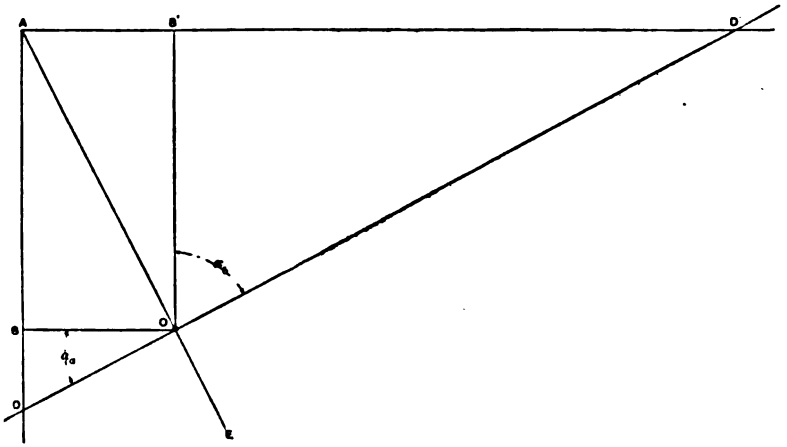

Fig. 8. Solution of Problem No. 3 for Minimum Sliding Friction

the center distance, or 8 inches, can then lie at an angle of about 90° with *A E*, thus meeting the condition required as to sliding friction. Thus this diagram, while relating to gears having the same pitch and number of teeth as Fig. 7, yet has an entirely different appearance, and gives different tooth angles and center distances, solving the problem as it does for the least sliding friction instead of for equal diameters of gears.

Measuring the diagram as accurately as may be, the following results are obtained: Tooth angle of gear $a = B\,O\,D = 28°$; tooth angle of gear b = angle $B'\,O\,D' = 90° - 28° = 62°$. This is the preliminary solution. After accurately working it out by the process before described, we have as a final solution, tooth angle of gear $a = 28°\ 28'$; tooth angle of gear $b = 61°\ 32'$. From this the remaining data can be calculated.

For designers who feel themselves skillful enough to solve such problems as these graphically without reference to calculations, the diagram may be used for the final solution. The variation between the results

obtained graphically and those obtained in the more accurate mathematical solution is a measure of the skill of the draftsman as a graphical mathematician. The method is simple enough to be readily copied in a note book or carried in the head. If the graphical method is to be used entirely, it will be best not to trust to the cross-section paper, which may not be accurately ruled; instead skeleton diagrams like those shown in Figs. 6, 7 and 8 may be drawn. For rough solutions, however, to be afterward mathematically corrected, as in the examples considered in this chapter, good cross-section paper is accurate enough. It permits of solving a problem without drawing a line. Point O may be located by reading the graduations; a pin inserted here may be used as a stop for the rule, from which the diameter and center distance are read directly; dividing $A\,D$, read from the paper, by $D\,D'$, read from the rule, will give the sine of the tooth angle of the gear a.

Formulas for Spiral Gearing

For sensible people, who prefer their rules to be embodied in formulas, the appended list has been prepared, using the following reference letters, which agree in general with the nomenclature of the Brown & Sharpe gear books.

N_a = number of teeth in gear a,
N_b = number of teeth in gear b,
P_n = normal diametral pitch or pitch of cutter,
γ = center angle,
α = angle of tooth with axis,
D = pitch diameter,
C = center distance,
N' = number of teeth for which to select cutter,
L = lead of tooth helix,
S = addendum,
W = whole depth of tooth,
T_n = normal thickness of tooth at pitch line,
O = outside diameter.

Where subscript letters $_a$ and $_b$ are used, reference is made to gears a and b, as for instance, "N_a" and "N_b," where the letter N refers to the number of teeth in gears a and b, respectively, of a pair of gears a and b.

$$\gamma = \alpha_a + \alpha_b \tag{1}$$

$$D = \frac{N}{P_n \cos \alpha} \tag{2}$$

$$C = \frac{D_a + D_b}{2} \tag{3}$$

$$N_b + (N_a \times \tan \alpha_a) = 2\,C\,P_n \times \sin \alpha_a \tag{4}$$

$$N' = \frac{N}{(\cos \alpha)^3} \tag{5}$$

$$L = \pi D \times \cot \alpha \tag{6}$$

$$S = \frac{1}{P_n} \tag{7}$$

$$W = \frac{2.157}{P_n} \tag{8}$$

$$T_n = \frac{1.571}{P_n} \tag{9}$$

$$O = D + 2S \tag{10}$$

Examples of Spiral Gear Problems*

A number of examples will be given in the following, which can be solved by simple modifications of the methods outlined for problems of Class 2. The same reference letters are used as before.

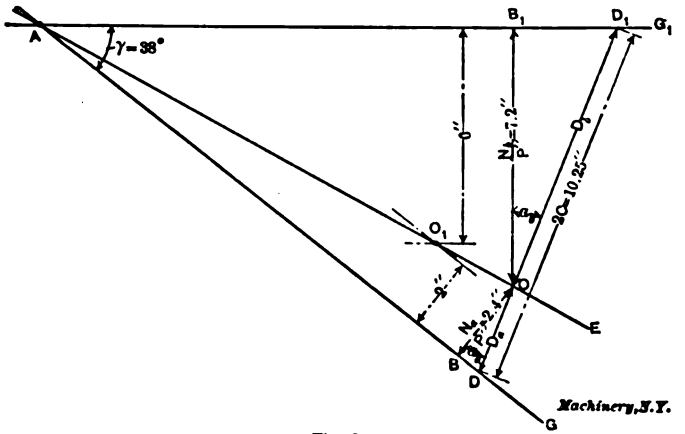

Fig. 9

Example 1.—Find the essential dimensions for a pair of spiral gears, velocity ratio 3 to 1, center distance between shafts 5⅛ inches, angle between shafts 38 degrees.

First obtain a preliminary solution by the diagram shown in Fig. 9. Draw lines $A\,G$ and $A\,G_1$ making an angle γ with each other equal to 38 degrees, the angle between the axes. Locate the ratio line $A\,E$ by finding any point such as O_1 between $A\,G$ and $A\,G_1$, that is distant from each of them in the same ratio as that desired for the gearing. In the case shown, it is 6 inches from $A\,G_1$ and 2 inches from $A\,G$, which is in the ratio of 3 to 1 as required. Through O_1 draw line $A\,E$ which may be called the ratio line. Select a trial number of teeth and pitch of cutter for the two gears, such, for instance, as 36 teeth for the gear and 12 for the pinion, and with 5 diametral pitch of the cutter. The diameter of a spur gear of the same pitch and number of teeth as the gear would be $36 \div 5 = 7.2$ inches. Find the point O

* MACHINERY, December, 1908.

on $A\,E$, which is 7.2 inches from $A\,G_1$. This point will be 2.4 inches from $A\,G$, if $A\,E$ is drawn correctly.

Now apply a scale to the diagram, with the edge passing through O and with the zero mark on line $A\,G$, shifting it to different positions until one is found in which the distance across from one line to another ($D\,D_1$ in the figure) is equal to twice the center distance, or 10.25 inches. If a position of the rule cannot be found which will give this distance between lines $A\,G$ and $A\,G_1$, new assumptions as to number of teeth and diametral pitch of the gear and pinion must be made, which will bring point O in a location where line $D\,D_1$ may be properly laid out. $D\,D_1$ being drawn, the problem is solved graphically. The tooth angle of the gear is B_1OD_1, or a_b, while that of the pinion

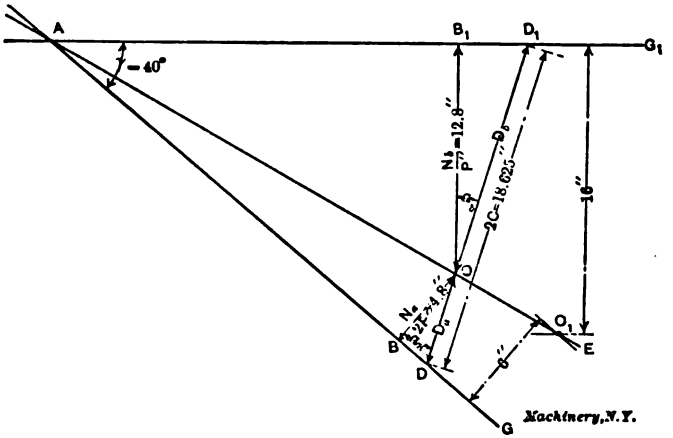

Fig. 10

is $B\,O\,D$, or a_a. $O\,D_1$ will be the pitch diameter of the gear, and $O\,D$ the pitch diameter of the pinion.

To obtain the dimensions more accurately than can be done by the graphical process, the pitch diameters should be figured from the tooth angles we have just found. To do this, divide the dimensions $O\,B_1$ and $O\,B$ for gear and pinion, by the cosine of the tooth angles found for them. If they measure on the diagram, for instance, 21 degrees 50 minutes and 16 degrees 10 minutes respectively (note that the sum of a_a and a_b must equal γ), the calculation will be as follows:

$$7.2 \div 0.92827 = 7.7563 = D_b$$
$$2.4 \div 0.96046 = 2.4988 = D_a$$
$$10.2551 = 2\,C$$

The value we thus get, 10.2551 inches, for twice the center distance, is somewhat larger than the required value, 10.250 inches. We have now to assume other values for a_a and a_b, until we find those which give pitch diameters whose sum equals twice the center distance. Assume, for instance, that $a_b = 21$ degrees 43 minutes, then $a_a = 38$ de-

grees — 21 degrees 43 minutes = 16 degrees 17 minutes. We now have:

$$7.2 \div 0.92902 = 7.7501 = D_b$$
$$2.4 \div 0.95989 = 2.5003 = D_a$$
$$10.2504 = 2\,C$$

This value for twice the center distance is so near that required that we may consider the problem as solved. The other dimensions for the outside diameter, lead, etc., may be obtained as for spiral gears at right angles, and as described in the previous part of this chapter.

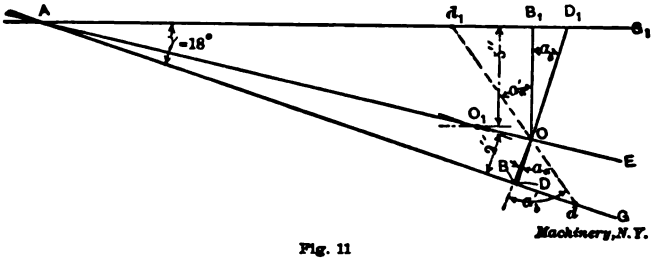

Fig. 11

Example 2.—Find the essential dimensions of a pair of spiral gears, velocity ratio 8 to 3, center distance between shafts 9 5/16 inches, angle between shafts 40 degrees.

The diagram for solving this problem is shown in Fig. 10. The axis lines $A\,G_1$ and $A\,G$ are drawn as before and the ratio line $A\,E$ is drawn in the ratio of 8 to 3, or 16 to 6, by the same method as just described. A point O is found having a location corresponding to 64 teeth and 5 pitch for the gear, and 24 teeth for the pinion. This gives distance $O\,B_1 = 12.8$ inches, and $O\,B = 4.8$ inches, by which position O is so located that a line $D\,D_1$ can be drawn through it at a convenient angle,

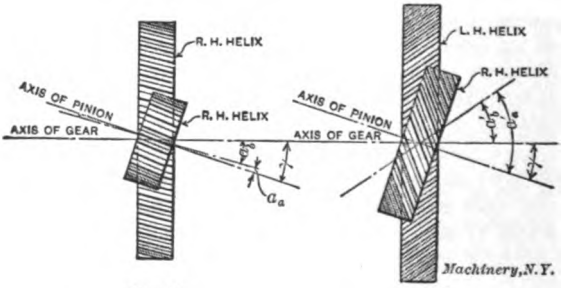

Fig. 12 Fig. 13

and with a length equal to twice the center distance, or 18.625 inches. We measure the angle for a preliminary graphical solution as before, and then by trial find the final solution as follows, in which angle a_b is 17 degrees 45 minutes, and a_a is 22 degrees 15 minutes'

$$12.8 \div 0.95240 = 13.4397 = D_b$$
$$4.8 \div 0.92554 = 5.1862 = D_a$$
$$18.6259 = 2\,C$$

This gives the value of twice the center distance near enough for gears of this size.

Example 3.—Find the essential dimensions for a pair of spiral gears, velocity ratio 5 to 2, center distance between shafts 4 1/16 inches, angle of shafts 18 degrees.

The diagram for solving this problem is shown in Fig. 11. The axis lines $A G_1$ and $A G$ are drawn as before, and the ratio line $A E$ is drawn in the ratio of 5 to 2, by the same method as just described. A point O is found having a location corresponding to 45 teeth and 8 pitch for the gear, and 18 teeth for the pinion. This gives distance $O B_1 = 5.625$ inches, and $O B = 2.250$ inches, in which position O is so located that line $D D_1$ can be drawn through it at a convenient angle, and with a length equal to twice the center distance, or 8.125 inches. We measure the angles for a preliminary mathematical solution as before, and then by trial find the final solution as follows, in which angle a_b is 16 degrees 45 minutes and a_a is 1 degree 15 minutes:

$$5.625 \div 0.95757 = 5.8742 = D_b$$
$$2.250 \div 0.99976 = 2.2505 = D_a$$
$$8.1247 = 2\,C$$

It is often a matter of great difficulty, when the center angle γ is as small as in this case, to find a location for point O such that standard cutters can be used, and that line $D D_1$ can be drawn of the proper length through O without bringing D to the left of B, or D_1 to the left of B_1. It will be noticed in this case that to make the center distance come right, angle a_a had to be made very small, so that the pinion is practically a spur gear. In some cases, to get the proper center distance, it may be necessary to so draw line $D D_1$ that one of the tooth angles is measured on the left side of $B O$ or $B_1 O$. Such a case, for instance, is shown in the position of $d_1 O d$. When a line has to be drawn like this, the tooth angles a'_a and a'_b are opposite in inclination, instead of having them, as usual, either both right hand or both left hand. In Fig. 12 are shown gears drawn in accordance with the location of line $D D_1$ of Fig. 11, while Fig. 13 shows a pair drawn in accordance with $d d_1$ of the same diagram, which will illustrate the state of affairs met with in cases of this kind. This expedient of making one spiral gear right-hand and one left-hand should never be resorted to except in case of extreme necessity, as the construction involves a very wasteful amount of friction from the sliding of the teeth on each other as the gears revolve.

Demonstration of Grant's Formula

As already mentioned, the number of teeth for which the cutter should be selected for cutting a helical gear, is found to be the formula

$$N' = \frac{N}{\cos^3 a}$$

in which N' = number of teeth for which cutter is selected,

N = actual number of teeth in helical gear,

a = angle of tooth with axis.

Note that $\cos^3 a$ is equivalent to $(\cos a)^3$.

A demonstration of this formula was presented by Mr. H. W. Henes in MACHINERY, April, 1908. This demonstration is as follows:

Let P_s be the perpendicular distance between two consecutive teeth on the spiral gear, and let D_1 be the diameter of the spiral gear. Let the gear be represented as in Fig. 14, and pass a plane through it perpendicular to the direction of the teeth. The section will be an ellipse as shown in $C\,E\,D\,F$. Designate the semi-major and semi-minor axes by a and b respectively.

Now N' is the number of teeth which a spur gear would have if its

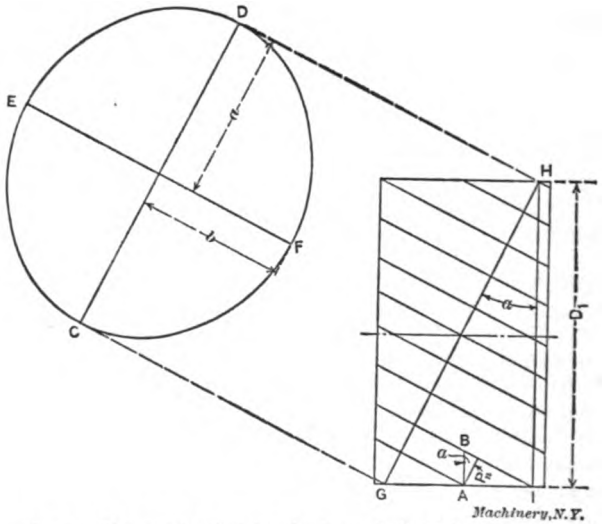

Fig. 14. Diagram for Deriving the Formula for Determining Spur Gear Cutter for Cutting Spiral Gears

radius were equal to the radius of curvature of the ellipse at E. Therefore, it is required to determine the radius of this curvature of the ellipse. This is done as follows:

From the figure we have:

$$2\,b = \text{axis}\ E\,F = D_1 \qquad (11)$$

$$2\,a = \text{axis}\ C\,D = G\,H = \frac{H\,I}{\cos\,a} = \frac{D_1}{\cos\,a} \qquad (12)$$

From (11) and (12) we have for a and b,

$$b = \frac{D_1}{2} \qquad (13)$$

$$a = \frac{D_1}{2\cos\,a} \qquad (14)$$

It is known, and shown by the methods of calculus, that the minimum curvature of an ellipse, that is, the curvature at E or F, equals

$\frac{b}{a^2}$. Taking the values of a and b found in (13) and (14), we have the curvature at E:

$$\text{Curvature} = \frac{b}{a^2} = \frac{\frac{D_1}{2}}{\frac{D_1^2}{4\cos^2 a}} = \frac{4 D_1 \cos^2 a}{2 D_1^2} = \frac{2\cos^2 a}{D_1} \qquad (15)$$

It is also shown in calculus that the *curvature* is equal to $\frac{1}{R}$, where R is the *radius of curvature* at the point E. Therefore from (15) we have:

$$\frac{1}{R} = \frac{2\cos^2 a}{D_1}, \text{ whence } R = \frac{D_1}{2\cos^2 a} \qquad (16)$$

Formula (16) can also be arrived at directly, without reference to the minimum curvature of the ellipse, by introducing the formula for the radius of curvature in the first place. The curvature is simply the reciprocal value of the radius of curvature, and is only a comparative means of measurement. The radius of curvature of an ellipse at the end of its short axis is $\frac{a^2}{b}$, from which formula (16) may be derived directly by introducing the values of a and b from equations (13) and (14).

Having now found the radius of curvature of the ellipse at E, we proceed to find the number of teeth which a spur gear of that radius would have. From Fig. 14 we have:

$$AB = \frac{P_n}{\cos a} \qquad (17)$$

Now, if AB be multiplied by the number of teeth of the spiral gear, we shall obtain a quantity equal to the circumference of the gear; that is:

$$AB \times N = \pi D_1, \text{ and since } AB = \frac{P_n}{\cos a} \text{ from (17)}$$

$$\frac{P_n}{\cos a} \times N = \pi D_1 \qquad (18)$$

Since N' is the number of teeth which a spur gear of radius R would have, then,

$$N' = \frac{2\pi R}{P_n} \qquad (19)$$

In equation (19) the numerator of the fraction is the circumference of the spur gear whose radius is R. and the denominator is the circular pitch corresponding to the cutter.

From equation (16) we have:

$$R = \frac{D_1}{2\cos^2 \alpha}$$

Substituting this value of R in (19), we have:

$$N' = \frac{2\pi D_1}{P_n \times 2\cos^2 \alpha} \tag{20}$$

From equation (18) we have:

$$D_1 = \frac{N P_n}{\pi \cos \alpha} \tag{21}$$

Substitute this value of D_1 in equation (20) and we have:

$$N' = \frac{2\pi N P_n}{2 P_n \pi \cos^3 \alpha}$$

or

$$N' = \frac{N}{\cos^3 \alpha} \tag{22}$$

Since N is the number of teeth in our spiral gear and N' is the number of teeth in a spur gear which has the same radius as the radius of curvature of the helix above referred to, this is the equivalent of saying that the cutter to be used should be correct for a number of teeth which can be obtained by dividing the actual number of teeth in the gear by the cube of the cosine of the tooth angle. Since the cosine of angle is always less than unity, its cube will be still less, so N' is certain to be greater than N, which will account for the fact that spiral gears of less than 12 teeth can be cut with the standard cutters.

CHAPTER II

DIAGRAMS FOR DESIGNING SPIRAL GEARS*

Great difficulties are usually experienced in designing spiral gears, and these difficulties are greatly accentuated when one has to design them for two shafts whose center distance cannot be altered to suit the gears, and also when the angle between the shafts is not a right angle, and the speed ratio is not equal. The general practice is to work out the gears by lengthy mathematics, and should the answer not come out as desired, then a new trial is made, varying either one or the other factor, until the angles and diameters are correct. This method of "cut and try" entails a great deal of work and waste of time. The following method, together with the diagrams used with it, will remove some of the difficulties, and enable one to arrive at the data required in a very short time. The method adopted is graphical, but the results may be checked by simple figuring.

As the pitch diameter, spiral angle, and circular pitch are interdependent, they cannot be considered as a starting point in solving the problem, because they are not known. The starting point, therefore, must be the speed ratio, and some idea of the strength required, together with the center distance. These factors, as a rule, can easily be ascertained. As it is common usage to employ ordinary spur gear cutters of regular diametral pitches for cutting spiral gears, the normal pitch, or distance from one tooth to the next measured at right angles to the tooth, must be the same as the pitch of a spur gear for which the cutter to be used is intended; therefore the corresponding diametral pitch and the speed ratio must be the initial data, all others being obtained afterwards.

Three diagrams are given for the graphical solution of spiral gears. The diagram in Fig. 15 shows the relation between the quotient of number of teeth ÷ diametral pitch, spiral angles, and pitch diameters. The quotient $\frac{\text{number of teeth}}{\text{diametral pitch}}$ is commonly termed "equivalent diameter," and will be so referred to in the following.

The diagram in Fig. 16 shows the relation between the diametral pitch, the number of teeth, and the equivalent diameter. Finally, the diagram in Fig. 17 shows the relation between the pitch diameter, the spiral angle, and the lead of the helix. We will now proceed to give some typical examples illustrating the use of the diagrams.

Example 1. Given a gear having 24 teeth, 6 diametral pitch, and a spiral angle of 40 degrees. Find the pitch diameter.

First obtain the value of the ratio, number of teeth ÷ diametral pitch, which, in this case, can be obtained without referring to dia-

* MACHINERY, October, 1908.

gram Fig. 16, being simply 24 ÷ 6 = 4. Locate 4 on the horizontal line in diagram Fig. 15, and project vertically until the line from figure 4 intersects the line for 40 degrees spiral angle. Then follow the circular arc from this point, either to the right or downward, reading off 5.22 on the corresponding scale, this being the pitch diameter. Should the diameter be required accurately, we can figure it by the formula:

$$\text{Pitch diameter} = \frac{\text{No. of teeth}}{\text{Diametral pitch}} \times \frac{1}{\cos \text{spiral angle}}$$

$$= 4 \times \frac{1}{\cos 40 \text{ deg.}} = 5.222 \text{ inches.}$$

This also gives a check of the result obtained by means of the dia-

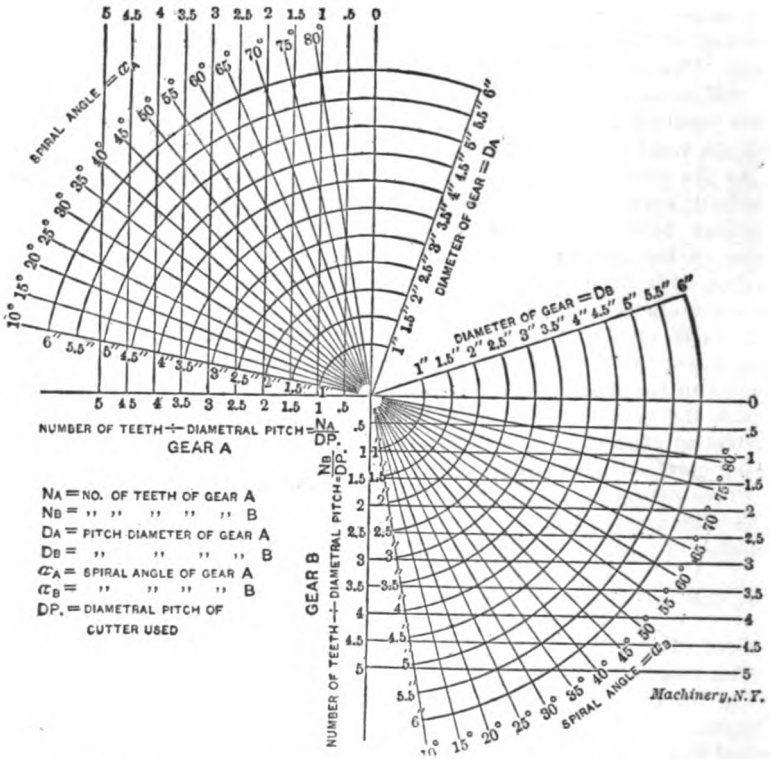
SPIRAL ANGLE = α_A
DIAMETER OF GEAR = D_A
DIAMETER OF GEAR = D_B
NUMBER OF TEETH ÷ DIAMETRAL PITCH = $\frac{N_A}{DP.}$
GEAR A
N_A = NO. OF TEETH OF GEAR A
N_B = " " " " " B
D_A = PITCH DIAMETER OF GEAR A
D_B = " " " " " B
α_A = SPIRAL ANGLE OF GEAR A
α_B = " " " " " B
DP. = DIAMETRAL PITCH OF CUTTER USED
GEAR B
NUMBER OF TEETH ÷ DIAMETRAL PITCH = $\frac{N_B}{DP.}$
SPIRAL ANGLE = α_B
Machinery, N.Y.

Fig. 15. Diagram of Relation between Number of Teeth, Diametral Pitch, Spiral Angles and Pitch Diameters

gram. The lead of the helix is now obtained from Fig. 17, by projecting the pitch diameter 5.22 horizontally to the radial line for the spiral angle, and then, following the vertical line to the lead scale at the bottom of the diagram, we find, in this case, a lead of 19.6 inches. Of course, the outside diameter of the blank would be 5.222 +

$2 \times 1/6 = 5.555$ inches, which is the pitch diameter + 2 times the addendum.

Example 2. Required two gears which are to be equal in all respects, the diametral pitch being 8, and the centers to be approximately 4 inches apart.

As the centers are not fixed, the gears in this case may be made with 45 degrees spiral angle, and the center distance may be slightly adjusted to suit the pitch diameters. Referring to Fig. 15, follow the circular arc from diameter of gear = 4 inches, until it intersects the radial line for 45 degrees spiral angle; then follow the vertical line down to the scale of the ratio between the number of teeth and diam-

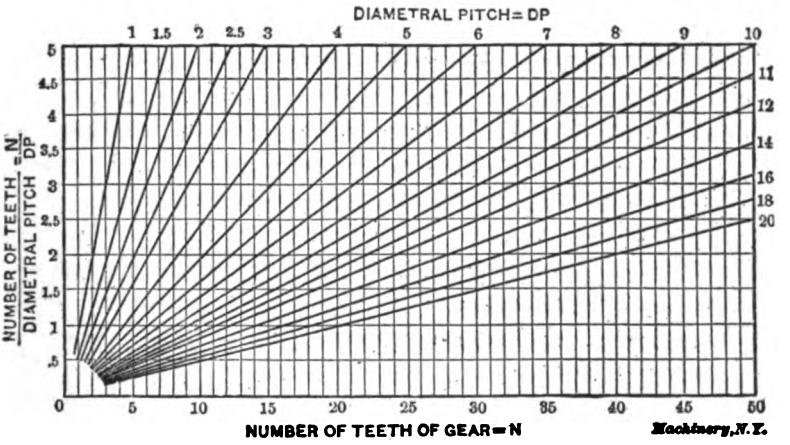

Fig. 16. Relation between Diametral Pitch, Number of Teeth, and Quotient of Number of Teeth divided by Diametral Pitch

etral pitch, which is found to be 2.82. Then, from Fig. 16, we find that with this ratio and 8 diametral pitch, the number of teeth is not a whole number, but the nearest number is 23, giving a ratio of 2.875 instead of 2.82, which, by reversing the process and referring to diagram Fig. 15, gives a pitch diameter of 4.07 inches. These results may be checked as follows:

$$\text{Pitch diameter} = \frac{\text{No. of teeth}}{\text{Diametral pitch}} \times \frac{1}{\cos 45 \text{ deg.}}$$

$$= 2.875 \times \frac{1}{0.707} = 4.07 \text{ inches.}$$

The outside diameter is $4.07 + 2 \times 0.125 = 4.32$. The lead, as obtained from diagram Fig. 17, in the same way as in Example 1, is 12.79 inches.

Example 3. Required a pair of spiral gears having a normal pitch corresponding to 10 diametral pitch, having a given center distance of 2½ inches approximately, the sum of the spiral angles being 90 degrees, and the speed ratio equal to 5 to 1.

In this case both portions of diagram Fig. 15 are used, the upper part

being employed for one gear and the lower part for the other, the easiest way being to get a strip of paper with two lines marked on its edge 5 inches (twice the center distance) apart, drawn to the same scale as the diagram. Move this strip of paper on the diagram (so that the edge of the strip passes through the center), as indicated at *A*, Fig. 18, until the lines marked coincide with the points where the ratio of the equivalent diameters equals 5 to 1, and then determine from Fig. 16 that these diameters also give whole numbers of teeth with 10 diametral pitch. We find that 0.5 and 2.5 at 78 degrees and 12 degrees are two such positions, and also 0.6 and 3.0 at 70 degrees and 20 degrees. If we use the latter values, we will have 6 teeth and 30 teeth at 70 and 20 degrees angle, respectively. The exact di-

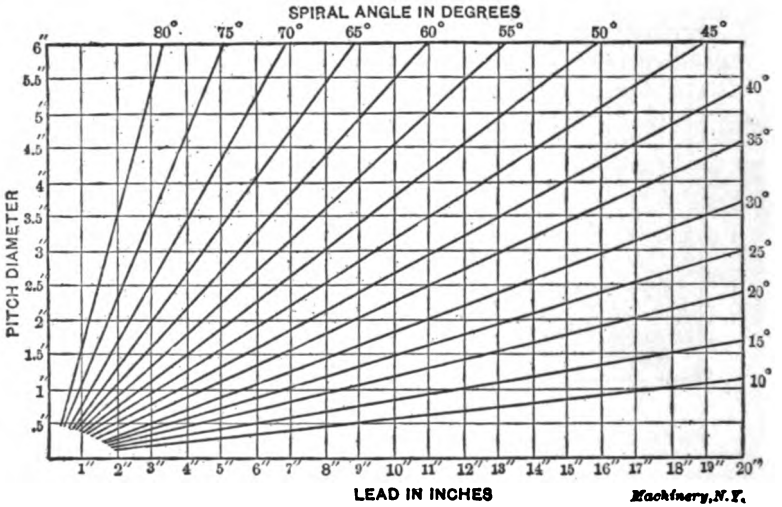

Fig. 17. Relation between Pitch Diameter, Spiral Angle and Lead of Helix

ameters can now be determined, as in our previous problem, and are 1.75 and 3.19 inches, respectively, the outside diameters being 0.2 inch larger, or 1.95 and 3.39 inches, respectively. This gives the center distances 2.47. These values can now be obtained from the formulas as before.

Example 4. Required a pair of spiral gears, having a fixed center distance of 4.5 inches, running at equal speeds, the diametral pitch being 7. The method of procedure is similar to that of the last example, using a strip of paper having a distance of 9 inches marked on the edge in the proper scale, as indicated at *B* in Fig. 18. At about 40 degrees spiral angle we find in Fig. 15 the ratio of number of teeth to diametral pitch to equal 3.14. This ratio must be adjusted on diagram Fig. 16, as previously shown, so as to enable one to get a whole number of teeth with 7 diametral pitch, this number being in this case 22. The ratio is then 3.143, and following from this in Fig. 15 to the 40-degree line, one obtains a pitch diameter of about 4.1 inches for one gear, and at 50 degrees about 4.9 inches for the other.

The spiral angles should now be carefully checked mathematically as follows:

$$\text{cos spiral angle (first gear)} = 3.143 \times \frac{1}{4.1} = 0.766; \text{ spiral angle} = 40 \text{ deg.}$$

$$\text{cos spiral angle (second gear)} = 3.143 \times \frac{1}{4.9} = 0.642;$$

$$\text{spiral angle} = 50 \text{ deg., nearly.}$$

Now obtain the leads from diagram Fig. 17 in the same way as before, giving the leads of the gears 15.4 and 12.9 inches, respectively.

Example 5. Required a pair of spiral gears, the axes of which are at an angle of 120 degrees; center distance 4.125; the ratio of equivalent diameters should be as 2 to 3, and the diametral pitch equals 5.

We require first of all two numbers representing the equivalent diameters, these two numbers bearing the ratio to each other of 2 to 3, and giving a whole number of teeth with 5 diametral pitch. These

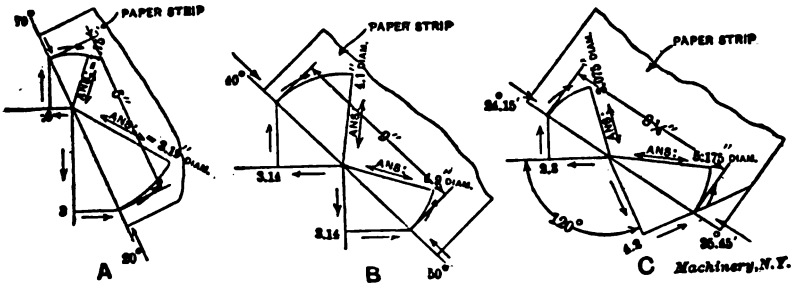

Fig 18. Separate Diagrams for the Solution of some of the Problems Presented

two numbers, when projected onto two spiral angle lines in a diagram made up as in Fig. 15, the sum of the angles of which equals 120 or 60 degrees, give two diameters whose sum equals the center distances multiplied by 2, or 8.25. In this case we cannot use both parts of the diagram Fig. 15, as it is made up for shafts at 90 degrees angle, and for this reason we must take the two readings from the same part of the diagram. The ratios 3 and 4.5 at 30 degrees give corresponding diameters of 3.5 and 5.2, the sum being 8.7. The ratios 2.8 and 4.2 giving 14 and 21 teeth at 25 and 35 degrees, respectively, have diameters of 3.1 and 5.15 (equals 8.25). From this we see that we must use 14 and 21 teeth and the ratios 2.8 and 4.2. The diameters and spiral angles can now be obtained graphically and more accurately in this manner:

Draw two radial lines, as shown at *C* in Fig. 18, at 120 degrees angle on a separate piece of paper, and lay off on these to same scale 2.8 and 4.2. From these points draw lines at right angles to the radial lines. It is now necessary to find the position of a line 8.25 inches long, terminating upon these lines, and passing through the center. A

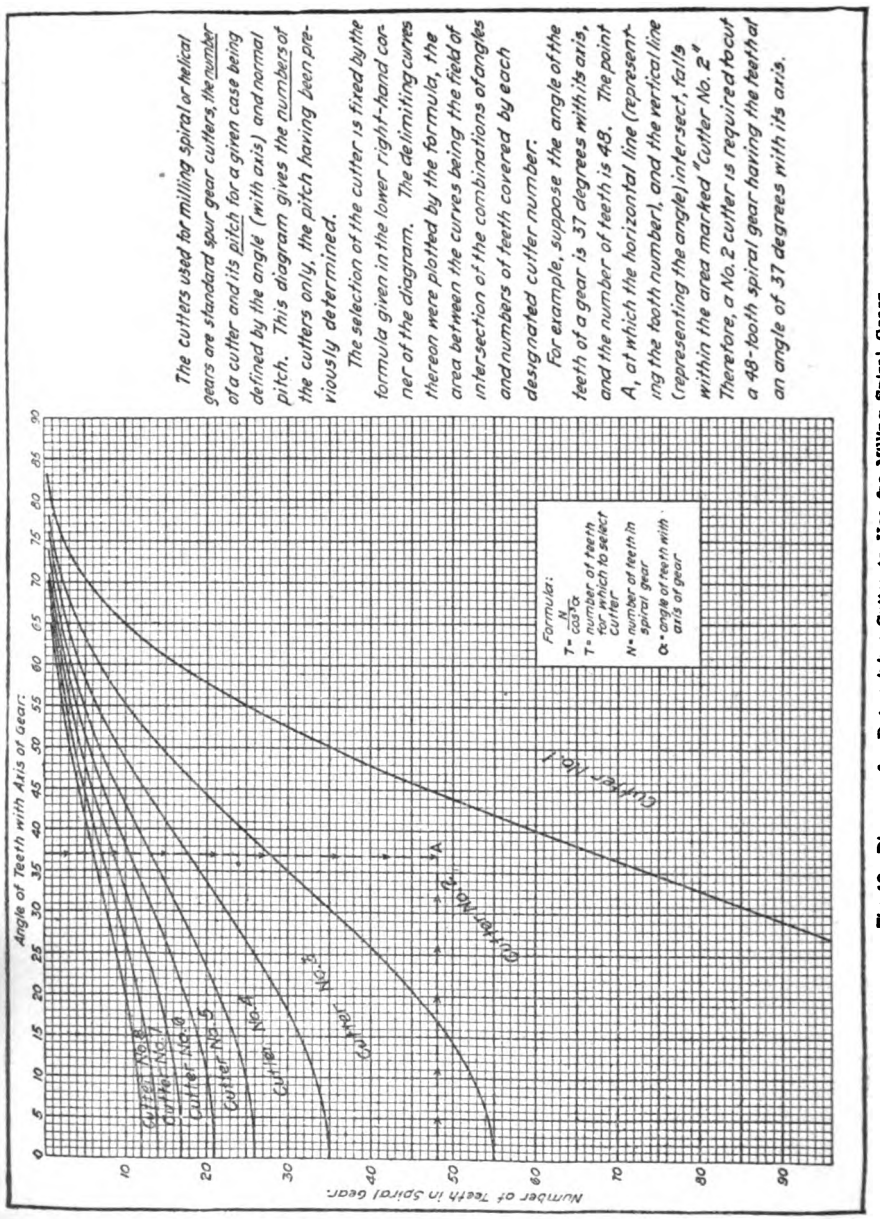
Angle of Teeth with Axis of Gear.
Number of Teeth in Spiral Gear.
Cutter No.1
Cutter No.2
Cutter No.3
Cutter No.4
Cutter No.5
Cutter No.6
Cutter No.7
Cutter No.8
Formula:
T = cos³α / N
T = number of teeth for which to select cutter
N = number of teeth in spiral gear
α = angle of teeth with axis of gear

The cutters used for milling spiral or helical gears are standard spur gear cutters, the number of a cutter and its pitch for a given case being defined by the angle (with axis) and normal pitch. This diagram gives the numbers of the cutters only, the pitch having been previously determined.

The selection of the cutter is fixed by the formula given in the lower right-hand corner of the diagram. The delimiting curves thereon were plotted by the formula, the area between the curves being the field of intersection of the combinations of angles and numbers of teeth covered by each designated cutter number.

For example, suppose the angle of the teeth of a gear is 37 degrees with its axis, and the number of teeth is 48. The point A, at which the horizontal line (representing the tooth number), and the vertical line (representing the angle) intersect, falls within the area marked "Cutter No. 2." Therefore, a No. 2 cutter is required to cut a 48-tooth spiral gear having the teeth at an angle of 37 degrees with its axis.

Fig. 19. Diagram for Determining Cutter to Use for Milling Spiral Gears

strip of paper is used in the same manner as before, and upon careful measuring of the respective distances from the center to the lines, one obtains the distances 3.075 and 5.175 inches, which represent the respective diameters, the sum being 8.25. The spiral angles are obtained by measuring or calculating as follows:

$$\text{cos spiral angle of first gear} = 2.8 \times \frac{1}{3.075} = 0.910;$$

$$\text{spiral angle} = 24 \text{ deg. } 15 \text{ min.}$$

$$\text{cos spiral angle of second gear} = 4.2 \times \frac{1}{5.175} = 0.812;$$

$$\text{spiral angle} = 35 \text{ deg. } 45 \text{ min.}$$

The above examples will show the careful student the manner of working out various problems as required, and if the directions are properly followed, this method will be found to be a great time-saver. It may be mentioned that it is advisable to keep the spiral angle as nearly equal in the two gears as possible in order to obtain the greatest efficiency of transmission. It should be noted that when diagrams of this type are to be used for practical calculation of spiral gears, they should be laid out in a much larger scale than is possible to show in these pages, and it would be advisable to lay out radial lines in Fig. 15 for every degree, and vertical and horizontal lines for every tenth of an inch, and circular arcs for equally fine subdivisions. The same is true of the diagrams in Figs. 16 and 17. In Fig. 16, horizontal lines should be laid out for every tenth of an inch, and vertical lines should be laid out for all whole numbers of teeth. In Fig. 17, the horizontal lines should be laid out for every tenth of an inch, vertical lines for at least every 0.2 of an inch, and radial lines for every degree. This diagram should also be laid out so that leads over 20 inches may be read off, as well as those below this figure.

In Fig. 19 is given a diagram for determining the cutter to use when milling the teeth of spiral gears. The instructions for the use of the diagram are given directly on the chart itself, so that no other explanation is necessary. This diagram was contributed to MACHINERY by Elmer G. Eberhardt, and appeared in the September, 1907, issue.

CHAPTER III

HERRINGBONE GEARS*

The following information on herringbone gearing is abstracted from a paper by Mr. Percy C. Day, of Milwaukee, Wis., read before the meeting of the American Society of Mechanical Engineers, under the auspices of the sub-committee on machine shop practice, at New York, December 5-8, 1911. This abstract was published in MACHINERY, January, 1912.

That the helical principle in toothed gearing is ideal from a theoretical point of view is well known. From a practical standpoint, so called "herringbone" gears have, however, been less satisfactory than straight-cut spur gears, because, until recently, no method was devised for producing them with the requisite speed and accuracy. Within the last six years, however, a method has been developed, in England, to a high degree of perfection. Herringbone gears made by this method are called Wuest gears, after the inventor. The distinction between these gears and those of the ordinary herringbone type is that the teeth of the former, instead of joining at a common apex at the center of the face, are stepped half the pitch apart and do not meet at all. This arrangement of the teeth does not affect the action of the gears, but it facilitates their commercial production.

Action of Spur Gearing

The aim of all designers of gearing is to transmit rotary motion from one axis to another in a perfectly even manner without variation of angular velocity. Let us consider the action of a straight spur pinion driving a gear. There are three distinct phases of engagement:

First phase: The root of the pinion tooth engages the point of the gear tooth.

Second phase: The teeth are engaged near the pitch line.

Third phase: The point of the pinion tooth engages the root of the gear tooth.

Let us assume that the teeth are accurately cut to involute form, so that if the pinion moves with even angular velocity it will produce corresponding evenness of motion in the gear; and also that the pinion has sufficient teeth to allow the engagement of successive teeth to overlap. At the beginning of the first phase, while the load is carried near the point of the gear tooth, that tooth is subjected to a maximum bending stress along its whole length. The portion of the pinion tooth near the root is sliding over the outer portion of the gear tooth; that is to say, two metallic surfaces of small area are sliding under heavy compression.

*MACHINERY, Engineering Edition, January, 1912.

The action during the second phase more nearly approaches ideal conditions. The teeth are engaged near their respective pitch lines and very little sliding takes place. During the third and final phase, the pinion tooth is subjected to a maximum bending stress, while the tooth surfaces again slide over each other, this time with the outer portion of the pinion tooth engaging the gear tooth near its root. The point to be noted is that while those portions of the mating teeth which are near the pitch lines transmit the load with rolling contact, those which are more remote have to transmit the same load with sliding contact. The inevitable result is that the points and roots of all the teeth tend to wear away more rapidly than the portions near the pitch lines.

It may be suggested that the sliding action can be eliminated by shortening the teeth so that they engage only the phase of rolling contact. This has been tried with a certain measure of success in the stub-toothed gear, but it cannot be carried far enough without curtailing the arc of contact so that continuity of engagement is lost.

Action of Herringbone Gears

Herringbone gears completely overcome all these difficulties, but only when they are accurately cut. If we take two exactly similar pinions with straight teeth and place them side by side on one shaft, with the teeth of one pinion set opposite the spaces of the other, then we have what is known as a stepped-tooth pinion. If this pinion is meshed with a composite gear made up in a similar manner, the action is modified so that there are always two phases of engagement taking place simultaneously. Such gears are commonly used for rolling mill work, because they stand up to heavy shocks better than the plain type. Still better action can be secured by assembling a number of narrow pinions with the last of the series one pitch in advance of the first and the others advanced by equal angular increments. As a practical proposition, however, gears made on these lines would be costly and difficult to produce.

The helical gear is the logical outcome of the stepped gear carried to its limit, and built up from infinitely thin laminations. Since the steps have merged into a helix, there must be a normal component of the tangential pressure on the teeth, producing end thrust on the shafts. To obviate end thrust, the helical teeth are made right-hand on one side and left-hand on the other. (See Fig. 20.) Such gears, with double helical teeth, are known as herringbone gears.

The fundamental principle of the action of herringbone teeth lies in the circumstance that *all phases of engagement take place simultaneously.* This holds good for every position of pinion and gear, provided only that the relationship between pitch, face width, and spiral angle is such as will insure a complete overlap of engagement. Since all phases of engagement occur together, it follows that the load is partly carried by tooth surfaces in sliding contact and partly by surfaces in rolling contact.

Those portions of the teeth farthest from the pitch line, which engage with sliding action, tend to wear away more rapidly than the portions nearest the pitch line. But the pitch line portion is always carrying part of the load, and the effect of wear on the ends of the teeth merely tends to throw more load on the center portions; in other words *there is a tendency to concentrate the load near the pitch lines.* The ends of the teeth, instead of wearing away to an ever-increasing extent from their original involute form, are relieved of some of the load from the moment that wear commences to take place. As soon as the load on these ends has been partially relieved and transferred to the middle portion, the wear becomes equalized all over the teeth and they do not tend to distort further from their original shape.

As the teeth keep their involute form, motion is transmitted from pinion to gear in an even manner, without jar, shock, or vibration. While herringbone teeth may not be intrinsically stronger than straight teeth, the elimination of shock renders them capable of transmitting heavier loads. Since all phases of engagement occur simultaneously, the transference of the load from one pinion tooth to the next takes place gradually instead of suddenly. This is the second principle of herringbone gearing, and may be termed *continuity of action.* In straight gears the continuity of action is a function of the number of teeth in the pinion. In herringbone gears continuity depends on the relationship between the face width and the number of teeth in the pinion. Pinions with as few as five teeth have been used with success by merely increasing the face width to suit such extreme conditions. This feature, which is peculiar to herringbone gears, has made practical the adoption of extremely high ratios of reduction hitherto considered impossible.

The third principle of herringbone gearing is that the bending stress on the teeth does not fluctuate from maximum to minimum as in straight gears, but remains always near the mean value. This feature is of special importance in rolling-mill driving and work of a similar nature.

To summarize the foregoing statements: The action of herringbone gears is continuous and smooth; there is no shock of transference from tooth to tooth; the teeth do not wear out of shape; the bending action of the load on the teeth is less than with straight gearing and does not fluctuate to anything like the same extent; the gears work silently and without vibration; back-lash is absent; friction and mechanical losses are reduced to a minimum; herringbone gears can be used for higher ratios and greater velocities than any other kind.

It has been explained that the teeth of the Wuest gears are so designed that those on the right- and left-hand sides of the gears are stepped half a space apart, and do not meet at a common apex at the center of the face, as in the usual type of herringbone gear. It has often been argued that the ordinary herringbone tooth is stronger than the Wuest tooth, because the latter lacks the support given by the junction of the teeth at the center. This argument would be sound if

gear teeth were ever stressed to anywhere near their breaking point. But it has been found in practice that considerations of wear so far outweigh those of mere breaking strength that a gear which is designed to give reasonable service will carry anywhere from ten to twenty times the working load without fracture. A point of vastly greater importance is that the stepped form will wear more evenly under extreme loads than the ordinary type. The reason for this is shown in Figs 20 and 21. The resultant tooth pressure is always normal to the teeth and tends to bend them apart. The stepped form offers a uniform resistance along its whole length, carrying the load from end to end (Fig. 20). The teeth of ordinary herringbone gears tend

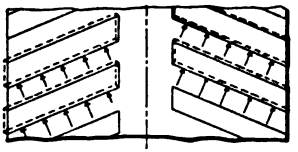

Fig. 20

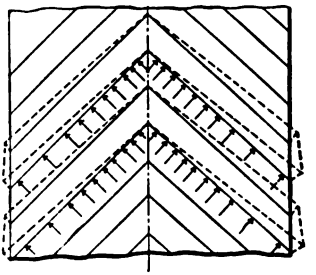

Fig. 21

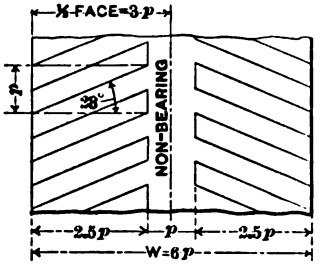

Fig. 22

Figs. 20 to 22. Diagrams showing Tooth Pressures and Angle Necessary for Continuity of Action

to separate more at the sides than near the supported center, causing the load to be concentrated toward the center (Fig. 21).

The standards which have been adopted for Wuest gears are the result of experience gained in Europe during the last six years. The spiral angle of the teeth is about 23 degrees with the axis. Since the nature of the action eliminates shock, it follows that the pitch required for given conditions will be much finer than would be chosen for spur gears. On the other hand, the face width will not be less, because there is as much necessity for wearing surface with one kind of tooth as with the other. Spur gears are usually made with a face width equal to three or four times the pitch. Herringbone gears may conveniently have a face width equal to six times the pitch, not because the width of this type need actually be greater, but by reason of the pitch being proportionately less.

Starting with a width equal to six times the pitch, and allowing one times the pitch as the non-bearing portion in the center, there remains

two and one-half times the pitch available for the teeth on each side. To insure continuity of engagement under all ordinary conditions, each tooth is inclined so as to cover an advance of one times the pitch within its length. The angle of 23 degrees satisfies this requirement (see Fig. 22).

The pressure angle which has been adopted for standard gears is 20 degrees. The teeth are shorter than the usual standards, because the high ratios used with these gears call for an average pinion diameter which is less than is used with straight spur gears for similar duty. The teeth are generated by hobs, and the short addendum combined with wide angle gives satisfactory tooth shapes, without undercutting of teeth on small pinions.

The dimensions proposed for an interchangeable system for these gears are as follows:

Tooth shape .....Involute
Pressure angle .....20 degrees
Spiral angle .....23 degrees

$$\text{Pitch diameter (20 teeth and over)} = \frac{\text{Number of teeth}}{\text{D.P.}}$$

$$\text{Blank diameter (20 teeth and over)} = \frac{\text{Number of teeth} + 1.6}{\text{D.P.}}$$

$$\text{Pitch diameter (under 20 teeth)} = \frac{0.95 \times \text{Number of teeth} + 1}{\text{D.P.}}$$

$$\text{Blank diameter (under 20 teeth)} = \frac{0.95 \times \text{No. of teeth} + 2.6}{\text{D.P.}}$$

$$\text{Addendum} = \frac{0.8}{\text{D.P.}}$$

$$\text{Dedendum} = \frac{1.0}{\text{D.P.}}$$

$$\text{Full depth} = \frac{1.8}{\text{D.P.}}$$

$$\text{Working depth} = \frac{1.6}{\text{D.P.}}$$

Standard face width for gears with pinions of not less than 25 teeth, 6 times circular pitch; face widths for high-ratio gears with small pinions, 6 to 12 times circular pitch.

When a pinion of less than 20 teeth is used with a standard gear, the center distance must be slightly increased to suit the enlargement of the pinion. If it is desired to keep the center distance to the standard dimensions, the gear diameter may be reduced by the amount of the enlargement given to the pinion. For example: If a pinion of 10 teeth, 5 diametral pitch is to mesh with a gear of 90 teeth at 10-inch centers,

$$\text{Pitch diameter of pinion} = \frac{0.95 \times 10 + 1}{5} = 2.1 \text{ inches.}$$

$$\text{Enlargement over standard pinion} = 0.1 \text{ inch,}$$

$$\text{Pitch diameter of standard gear} = \frac{90}{5} = 18.0 \text{ inches.}$$

$$\text{Reduced pitch diameter of gear} = 18.0 - 0.1 = 17.9 \text{ inches.}$$

$$\text{Center distance} = \frac{17.9 + 2.1}{2} = 10 \text{ inches.}$$

Power Transmitted by Herringbone Gears

The important factor in determining the proportions of the teeth is the relationship between pitch line velocity and the permissible

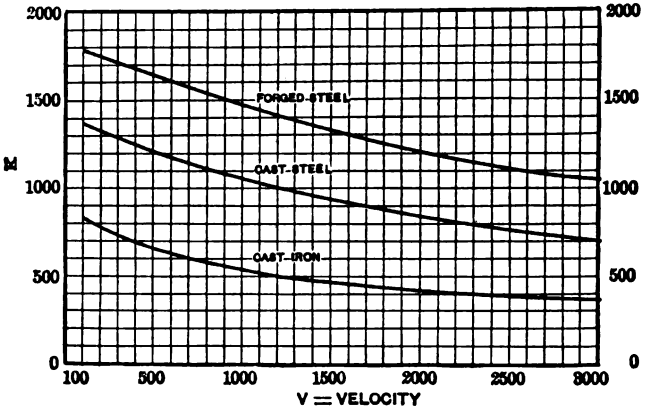

Fig 23. Shearing Stress with Relation to Pitch Line Velocity

specific tooth pressure; in other words, the total tooth pressure divided by the area of all the available simultaneous contact along the teeth. Theoretically, this contact has no area since it should consist of lines without breadth. Actually, an area exists, due to the elastic compression of the teeth in contact, in a similar way in which an area of contact exists between a car wheel and a rail. The area of contact is indeterminate, but the specific tooth pressure is proportional to the driving stress on the teeth.

In order to obtain a simple rule for finding the proper dimensions, the results of experience in the matter of safe working loads under given conditions have been reduced to a relationship between pitch line velocity and the shearing stress on the pitch line thickness of an imaginary straight tooth, assuming only one tooth in engagement at a time. The shearing stress is a measure of the specific tooth pressure, and the relationship referred to affords a convenient means of arriving at reliable dimensions. The curves, Fig. 23, give values of shearing stress K in pounds per square inch on the pitch line section of

an imaginary single tooth for corresponding pitch line velocities V in feet per minute. The values are entirely empirical, but they are based on the results of extended experience, and lead to dimensions which are safe and reliable. Different curves are given for different materials, and it is necessary to use that curve which corresponds to the lowest grade material of the combination. The dimensions of gears can be derived from the curves in the following manner:

H.P. = brake horsepower transmitted,
N = revolutions per minute,
D = pitch circle diameter, inches,
p = circular pitch in inches (use nearest diametral pitch),
W = total width of face, inches,
V = pitch line velocity, feet per minute,
P = total tooth pressure at pitch line, pounds,
K = stress factor (from curve).

Then

$$V = \frac{\pi D N}{12} \qquad P = \frac{\text{H.P.} \times 33{,}000}{V} \qquad P = \frac{p W K}{2}$$

$P = 8\, p^2 K$ { in normal gears of moderate ratio, and face width equivalent to six times the circ. pitch }

$$p = \sqrt{\frac{P}{3K}}$$

For high ratio gears take $W = Rp$ (R = ratio) up to maximum of $W = 10p$.

$$p = \sqrt{\frac{2.5P}{RK}}$$

In normal gears it is safe to aim at pitch line velocities between 1000 and 2000 feet per minute, with 1500 feet as a fair average. If the pinion is to be fixed to a motor shaft without external support, the diameter must be greater than when it can be supported on both sides. Cast iron is preferable to cast steel for gears of large diameters and moderate power, but the latter will be found more economical for high tooth pressures. Pinions are usually made from steel forgings of 0.40 to 0.50 per cent carbon. Soft pinions should never be used for herringbone gears.

There are two special cases where the ordinary methods of calculation should not be used. Rolling-mill gears are subjected to stresses which are so far in excess of the average working load that it is necessary to consider carefully the strength of the teeth in regard to possible overloads. Extra high velocity gears, such as are used for steam turbines, require additional wearing surface and are characterized by extreme width of face combined with abnormally fine pitch.

CHAPTER IV

CALCULATING GEARS FOR GENERATING SPIRALS ON HOBBING MACHINES*

From time to time formulas have been developed for calculating the gears to be used for generating spiral gears. Those published in the past, however, have applied only to certain types of gear-hobbing machines. In the following a formula is given which is applicable to any type of gear-hobbing machine, and which is simpler to use than any formula so far published. In developing this formula, simple arithmetical expressions have been made use of, as far as possible, in order to make it especially useful to the practical man.

In order to clearly understand the use of any formula, it is necessary to know something of the principles involved. Fig. 24 shows a top view of a standard hobbing machine (the No. 3 Farwell) designed for cutting spur gears. Before dealing with the change gear ratios for spiral work, it will be well to have the methods for cutting spur gears firmly fixed in our minds. Assume the hob to be single threaded. It is evident that for each revolution of the hob, the gear being cut must move one tooth. Therefore, the hob revolves, for each revolution of the blank, as many times as there are teeth to be cut. To cut 44 teeth, we must gear the table to revolve once for every 44 revolutions of the hob.

The bevel gearing at D, Fig. 25, has a ratio of 3 to 1, the worm at E is double-threaded, and the worm-wheel F has 40 teeth. Hence the shaft B must revolve 3×44 times for each revolution of the table, and the worm shaft C must revolve 20 times for each revolution of the table. Hence we have:

$$\frac{\text{Revolutions of } B}{\text{Revolutions of } C} = \frac{3 \times 44}{20}$$

Inverting this ratio to get the change gear ratio required to obtain this result, we have:

$$\frac{20}{3 \times 44} = \frac{\text{Product of No. of teeth in driving gears}}{\text{Product of No. of teeth in driven gears}}$$

In the following formulas, we will designate the product of the number of teeth in the driving gears P, and the product of the number of teeth in the driven gears p.

Should we use a double-threaded or triple-threaded hob, the gear we are cutting must revolve two or three teeth for each revolution of the hob; in other words, the speed of the table is increased directly as the number of threads on the hob, so we must multiply the number

*MACHINERY, Engineering Edition, December, 1911.

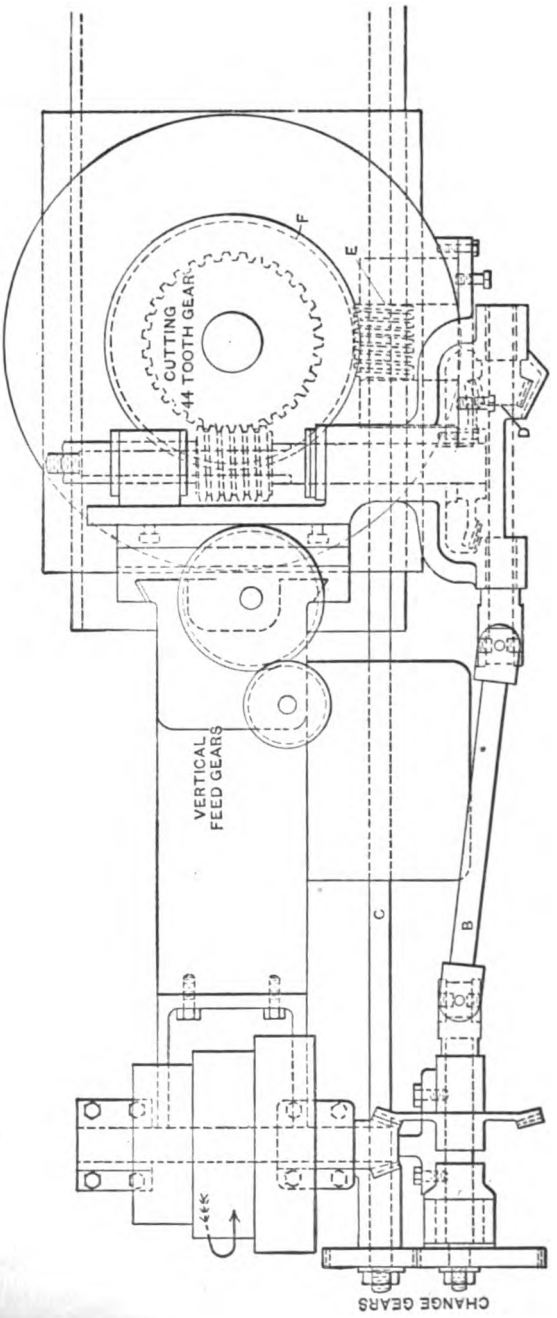

Fig. 24. Hob and Table Driving Arrangement of a No. 8 Farwell Gear-hobbing Machine

of teeth in the driving gears by the number of threads on the hob, giving us this formula:

$$\frac{20 \times \text{No. of threads on hob}}{3 \times \text{No. of teeth to be cut}} = \frac{P}{p}$$

A similar formula may be worked out in this way for any type of gear hobber.

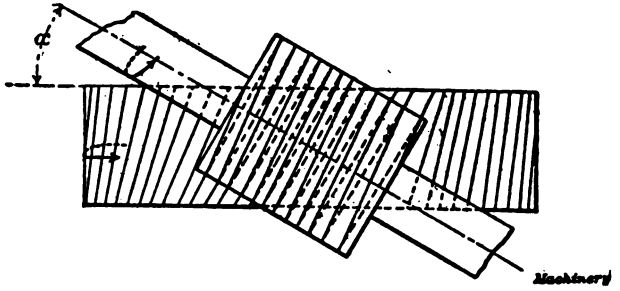

Fig. 25. Cutting a Right-hand Spiral Gear with a Right-hand Hob

Generating Spirals

For each revolution of the table, the head carrying the hob feeds down a certain distance across the face of the blank, this distance varying from 0.010 to 0.150 inch in common practice. To fully understand the following discussion, the action of the machine, as illustrated in Figs. 25 to 28, inclusive, should be noted. In Fig. 25 is shown the generation of a right-hand spiral gear with a right-hand hob; in Fig.

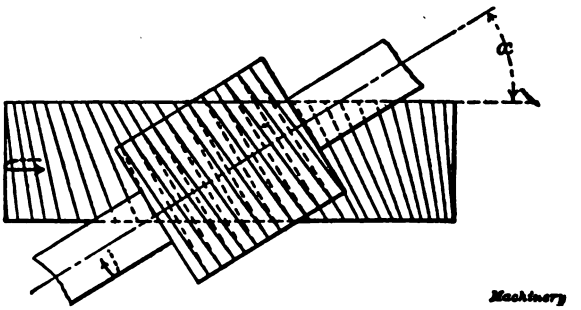

Fig. 26. Cutting a Left-hand Spiral Gear with a Right-hand Hob

26, a left-hand spiral gear with a right-hand hob; in Fig. 27, a left-hand spiral gear with a left-hand hob; and in Fig. 28, a right-hand spiral gear with a left-hand hob. In each of these illustrations the direction of rotation of the table is indicated by the arrow showing the direction of rotation of the gear being cut. The direction of rotation of the hob is also indicated by an arrow showing the direction of rotation of its shaft. In Figs. 25 and 27, where a gear is cut with

a hob of the same "hand," the angle a, as indicated, equals the difference between the tooth angle and the thread angle of the hob. In Figs. 26 and 28, where the gear and the hob are of different "hand," the angle a equals the sum of the tooth angle and the thread angle of the hob. After this preliminary introduction, we are ready to deal intelligently with the problem in hand.

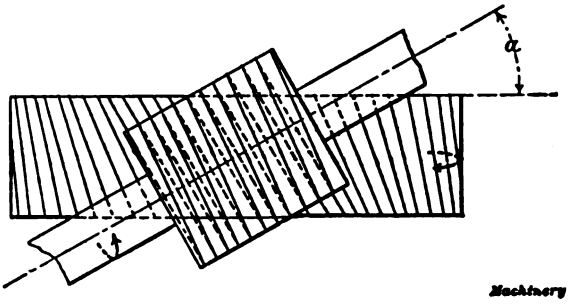

Fig. 27. Cutting a Left-hand Spiral Gear with a Left-hand Hob

Assume the spiral gear shown in Fig. 29 to have sixty-four teeth. As indicated, the gear has a left-hand spiral and we will assume that it is cut with a left-hand hob. A single-threaded hob cutting a spiral gear would revolve sixty-four times for one revolution of the table; but since in this case the teeth are helical and the hob travels downward a certain distance, the position of the gear tooth must be advanced somewhat for every revolution with relation to the hob. In

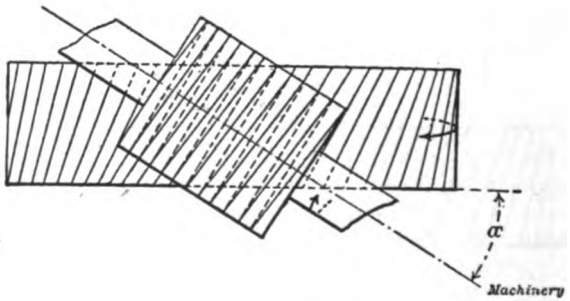

Fig. 28. Cutting a Right-hand Spiral Gear with a Left-hand Hob

other words, if the hob revolves sixty-four times, sixty-four teeth will have passed by, but the blank is not in the same position as at the beginning.

In Fig. 29, G represents the position of the hob axis at the beginning of the cut and H the position of the hob axis after the hob has made sixty-four revolutions. This shows that the blank must make more than one revolution in this case. If we were cutting a left-hand spiral gear with a right-hand hob, as shown in Fig. 26, the blank

would have to make less than one complete revolution for each sixty-four revolutions of the hob, the blank in this case being revolved in the opposite direction. It will thus be seen that when cutting a gear of the same "hand" as the hob, the table must revolve slightly faster than it would have to do when cutting a spur gear with the same number of teeth; but when the hob and the gear are of opposite "hand," the table must revolve more slowly than when cutting a spur gear. This has an important bearing upon the formula we are about to construct.

To gear the machine properly we must first find the ratio according to which the table is required to lag behind or lead ahead of its natural speed relative to the hob. In the first formula devised by the writer for the hobbing of spiral gears, the ratio was arrived at by considering the number of revolutions made by the hob, while the table

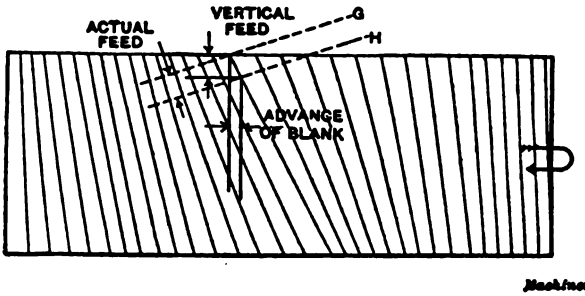

Fig. 29. Diagram showing Advance Required in Table Motion when cutting a Left-hand Spiral Gear with a Left-hand Hob

makes one full revolution. The formula thus constructed for the No. 1 Farwell gear-hobbing machine is:

$$\frac{30 \times \text{No. of threads on hob}}{\text{No. of teeth} \pm [(\text{feed} \times \text{tan. of angle}) \div \text{circ. pitch}]} = \frac{P}{p}$$

This applies only to one particular machine. A later formula designed for the No. 3 Farwell machine, as shown in Fig. 24, considers the number of table revolutions required while the hob revolves a sufficient number of times to represent one revolution of the table, if we were cutting a spur gear:

$$\frac{20 \pm \dfrac{20}{\text{Pitch circumference} \div (\text{feed} \times \tan \text{ of angle})}}{(8 \times \text{No. of Teeth}) \div \text{No. of threads on hob}} = \frac{P}{p}$$

Being called upon to derive another formula to be used for the new No. 3 Farwell universal hobbing machine, it occurred to the writer that a formula adapted to all hobbing machines would avoid much confusion. In the following is given the process by which such a formula was derived; the result is a simpler formula than any previously used.

Use + sign when gear and hob are of opposite "hand," and — sign when they are of the same "hand."

In cutting teeth at large angles it is desirable to have the hob the same hand as the gear, so that the direction of the cut will come against the movement of the blank, but at ordinary angles one hob will cut both right- and left-hand gears.

The actual feed of the cutter depends upon the angle of the teeth as well as on the vertical movement of the hob. This is obtained by dividing the vertical feed by the cosine of the tooth angle; thus:

$$\frac{0.03125}{0.70711} = 0.043 \text{ inch actual feed.}$$

The last computation need not be made except to see that we are not figuring on too heavy a cut, as it has nothing to do with the gearing of the hobbing machine. In setting up a hobbing machine for spiral gears, care should be taken to see that the vertical feed does not trip until the machine has been stopped or the hob has fed down clear of the finished gear. Should the feed stop while the hob is still in mesh with the gear and revolving at the ratio required to generate a spiral, the hob will cut into the teeth and spoil the gear.

Should the thread angle of the hob be exactly equal to the tooth angle of the spiral gear, and both hob and gear be the same "hand," the axis of the hob spindle will be at right angles to the axis of the gear. This is in conformity with the rule that when hob and gear are of the same "hand," the hob spindle is set at the tooth angle minus the thread angle of the hob. In cutting a spiral gear to take the place of a worm-wheel, it is possible to use the same hob that was used in cutting the worm-wheel. This would be a case where it is not necessary to tilt the hob spindle. Sometimes multiple-threaded hobs are used in order to make the thread angle approximately equal to the tooth angle, when it is desired to cut spiral gears with machines on which the hob spindle swivels through only a small angle.

CHAPTER V

THE SETTING OF THE TABLE WHEN MILLING SPIRAL GEARS*

It has been frequently stated that the most suitable angle (and the one most likely to produce the best results) at which to set the table of the milling machine when milling spiral gears, is that corresponding either to the diameter of the gear measured at the bottom of the space, or to the diameter measured at the working depth. The reason invariably adduced for this is that, if the angle chosen is the angle of the spiral measured on the pitch cylinder of the gear, an undue amount of undercutting, and therefore weakening, of the teeth will

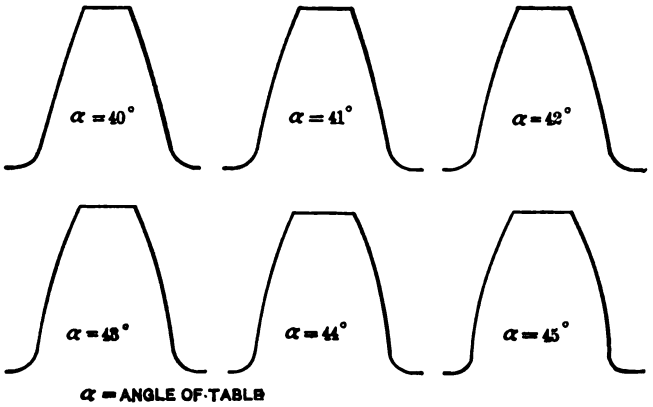

Fig. 80. Shapes of Teeth obtained by Setting the Table at Different Angles, Cutter and Lead remaining the same

occur, owing to an excessive amount of interference with the sides of the teeth on the part of the cutter; and that, therefore, a somewhat smaller angle should be selected to reduce these effects.

To determine whether there was, practically, anything in this idea or not, some experiments were recently made on a spiral gear, the immediate object of the experiments being to find out what the effect of altering the angle of setting of the milling machine table was upon the shape of the tooth cut.

The experiments were made upon a cast-iron gear, with a pitch diameter of 4.242 inches, and designed for 24 teeth, the diametral pitch (corresponding to the normal circular pitch) being 8. The correct cutter to use was determined by the formula $N_c = \frac{N}{\cos^3 a}$,

*MACHINERY, Engineering Edition, June, 1911.

this cutter being No. 3 in each of the cases dealt with. The experiments consisted of cutting six teeth in the gear blank, all being of the same depth, the angle of setting of the table of the milling machine being different in each of the six cases. The spiral angle measured on the pitch cylinder was 45 degrees, the lead of the spiral being 13.32 inches, for which the gears of the spiral dividing-head were arranged. The six spirals chosen were at angles of 45, 44, 43, 42, 41, and 40 degrees, each tooth being formed by two cuts at one angle, the lead of the spiral remaining the same throughout the series of tests. It should be here noted that 43 degrees is the angle which corresponds to the diameter measured at the bottom of the space.

The profiles of the teeth taken as sections normal to the spiral on the pitch surface are indicated in Fig. 30, the profiles being drawn ac-

TABLE OF OBSERVED TOOTH DIMENSIONS

Angle of Table Setting, Degrees	Width of Tooth at a Depth of Inches						
	0	0.050	0.100	0.125	0.150	0.200	0.250
45	0.104	0.145	0.185	0.200	0.208	0.221	0.239
44	0.102	0.144	0.181	0.195	0.202	0.220	0.238
43	0.099	0.142	0.176	0.188	0.200	0.218	0.236
42	0.094	0.135	0.168	0.180	0.196	0.215	0.234
41	0.087	0.128	0.158	0.171	0.185	0.211	0.232
40	0.078	0.115	0.146	0.158	0.171	0.205	0.230

curately to scale—three times full size. The various widths of the teeth at different depths were obtained as accurately as possible by means of a Brown & Sharpe gear-tooth vernier caliper. These widths are given in the accompanying table. Of course, it will be readily seen that although great care was exercised in securing measurements that would be as accurate as possible, the dimensions given above may be incorrect by about one or two thousandths inch, but not more.

In regard to the shapes of the teeth, it will be noticed that the 45-degree tooth is slightly undercut at the root, while the other teeth do not show any undercutting whatever. The undercutting referred to in the 45-degree tooth amounts to a reduction in width below the widest part of the tooth of about 0.010 inch.

The deductions drawn from the results of these tests are:

1. That the practice of setting the table at an angle less than the spiral or helix angle measured on the pitch surface is justified; though this angle should not be less than the spiral or helix angle measured at the bottom of the tooth.

2. That a cutter for a larger number of teeth than that given by the formula $N_c = \frac{N}{\cos^3 \alpha}$ should be employed, in order to counteract the flattening and widening effect of the cutter with an angle as indicated above.